TRANSTECNO®
the modular gearmotor

ATS

ATS

ATS Alù

Motoriduttori pendolari
Helical parallel gearmotors

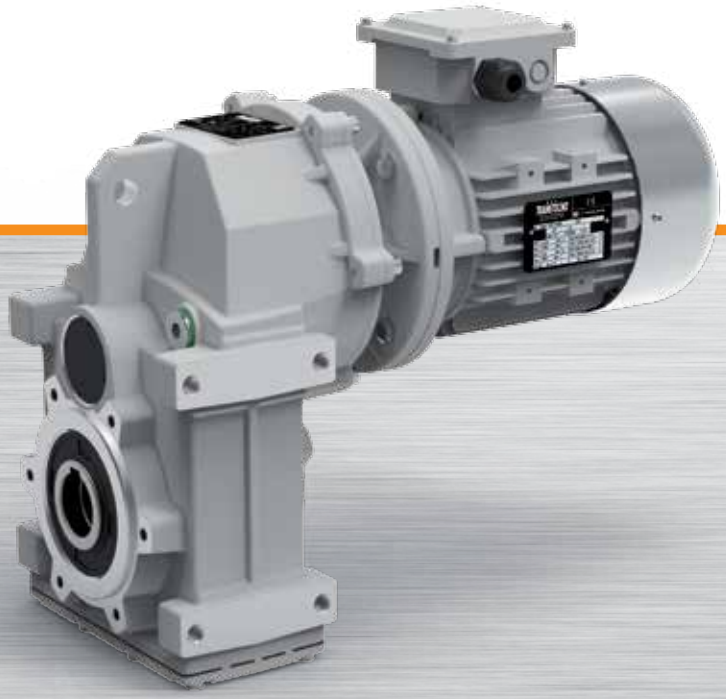

TRANSTECNO · GENUINE · PRODUCTS ·

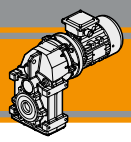

ENERGY SAVING

Indice	*Index*	Pag. *Page*
Caratteristiche tecniche	*Technical features*	**F2**
Designazione	*Classification*	**F3**
Sensi di rotazione	*Direction of rotation*	**F4**
Simbologia	*Symbols*	**F4**
Lubrificazione	*Lubrication*	**F4**
Carichi radiali	*Radial loads*	**F5**
Dati tecnici	*Technical data*	**F6**
Dimensioni	*Dimensions*	**F12**
Accessori	*Accessories*	**F16**

Questa sezione annulla e sostituisce ogni precedente edizione o revisione. Qualora questa sezione non Vi sia giunta in distribuzione controllata, l'aggiornamento dei dati ivi contenuto non è assicurato. **In tal caso la versione più aggiornata è disponibile sul nostro sito internet www.transtecno.com**

This section replaces any previous edition and revision. If you obtained this catalogue other than through controlled distribution channels, the most up to date content is not guaranteed. ***In this case the latest version is available on our web site www.transtecno.com***

Caratteristiche tecniche

I motoriduttori pendolari della serie ATS sono caratterizzati da un elevato grado di modularità: partendo da un corpo di base è possibile configurarlo secondo le esigenze con diversi kit in entrata ed in uscita.

Caratteristiche comuni a tutta la serie:

- Carcassa e flangia PAM in pressofusione di alluminio
- Lubrificazione permanente con olio sintetico.
- Ingranaggi cilindrici a denti elicoidali, induriti e rettificati.
- Flange di uscita in ghisa.

Technical features

The high degree of modularity is a design feature of ATS helical parallel range. It is possible to set up the version required by using input and output kits.

The main features of ATS range are:

- *Die-cast aluminium housings and input flanges*
- *Permanent synthetic oil long-life lubrication.*
- *Ground-hardened helical gears.*
- *Cast iron output flanges.*

ENERGY SAVING

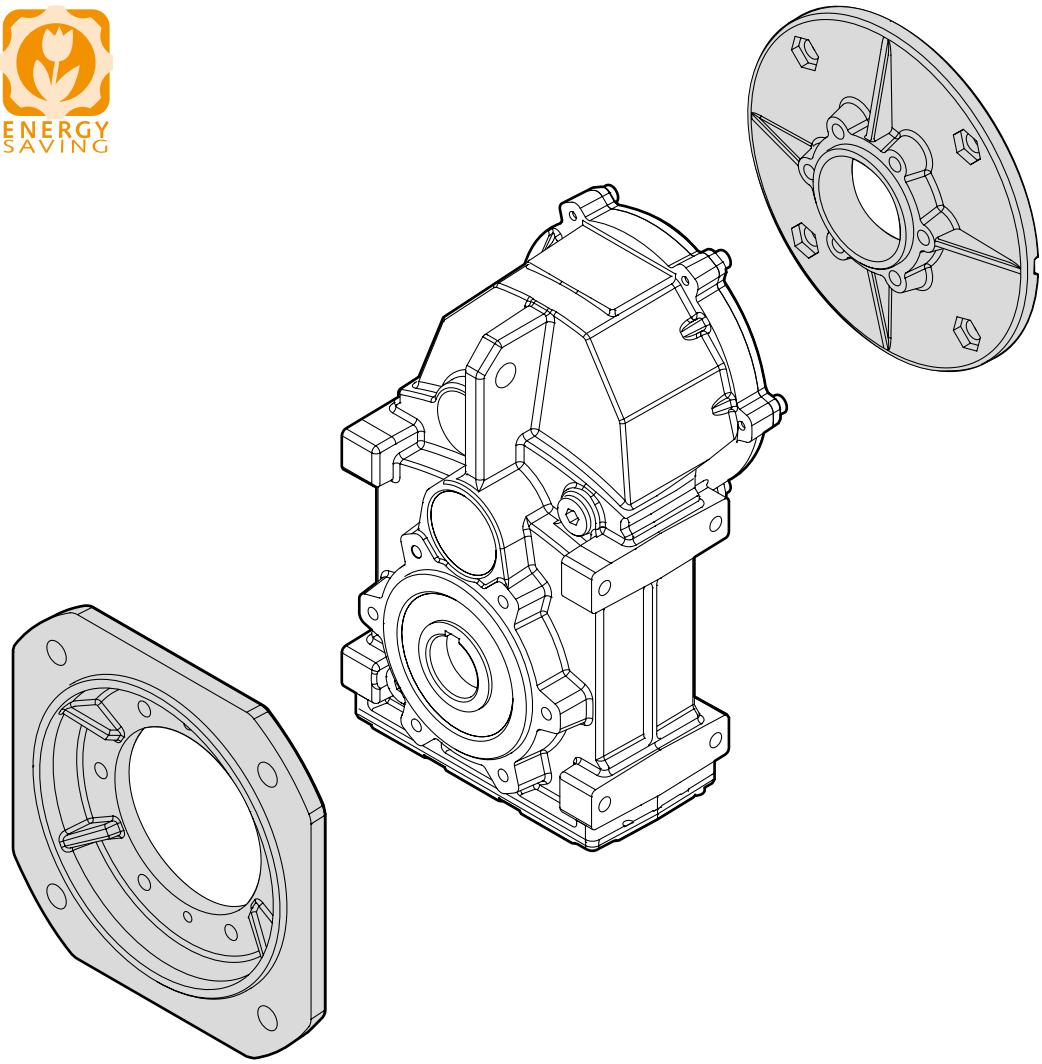

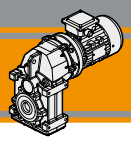

Designazione — *Classification*

Versione Riduttore
Gearbox Version

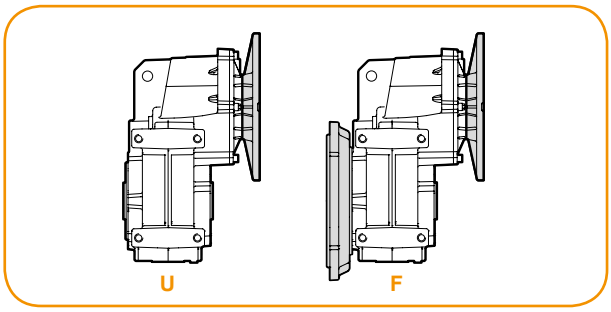

Albero di uscita
Output shaft

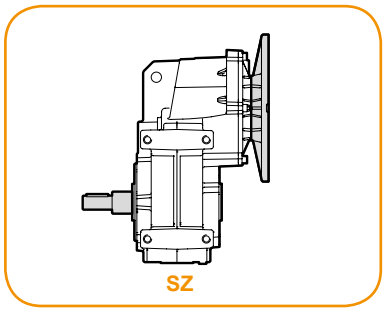

RIDUTTORE / *GEARBOX*

ATS	90	2	U	29.65	D35	90	B5	SZ
Tipo *Type*	Grandezza *Size*	Stadi *Stages*	Versione *Version*	Rapporto *Ratio*	Albero cavo uscita *Hollow output shaft*	IEC	Forma costruttiva *Version*	Albero uscita maschio *Solid output shaft*
ATS 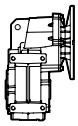	**90** **91**	**2** **3**	**U...** **F...**	vedi tabelle *see tables*	vedi tabelle *see tables*	**63..** **—** **112..**	**B5** **B14**	**SZ**

Versione Riduttore
Gearbox Version

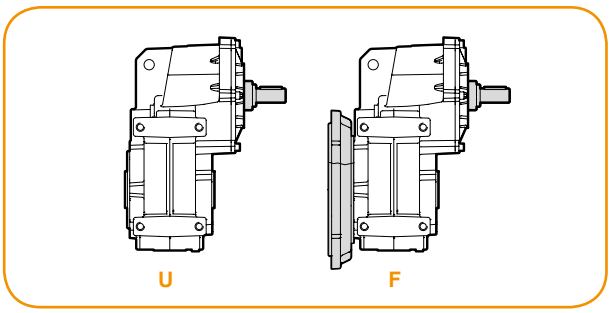

Albero di uscita
Output shaft

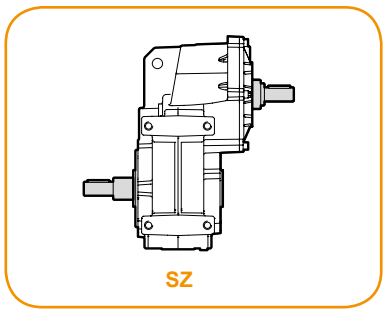

RIDUTTORE / *GEARBOX*

ATSIS	90	2	U	29.65	D35	SZ
Tipo *Type*	Grandezza *Size*	Stadi *Stages*	Versione *Version*	Rapporto *Ratio*	Albero cavo uscita *Hollow output shaft*	Albero uscita maschio *Solid output shaft*
ATSIS 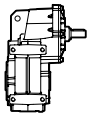	**90** **91**	**2** **3**	**U...** **F...**	vedi tabelle *see tables*	vedi tabelle *see tables*	**SZ**

MOTORE / *MOTOR*

0.75kW	4p	3ph	230/400V	50Hz	T1
Potenza *Power*	Poli *Poles*	Fasi *Phases*	Tensione *Voltage*	Frequenza *Frequency*	Pos. morsettiera *Terminal box pos.*
vedi tabelle *see tables*	**2p** **4p** **6p** **8p**	**1ph** **3ph**	**230V** **230/400V**	**50Hz** **60Hz**	**T1** (Std) **T4** **T2** **T3**

Sensi di rotazione — *Direction of rotation*

ATS...2
ATSIS..2

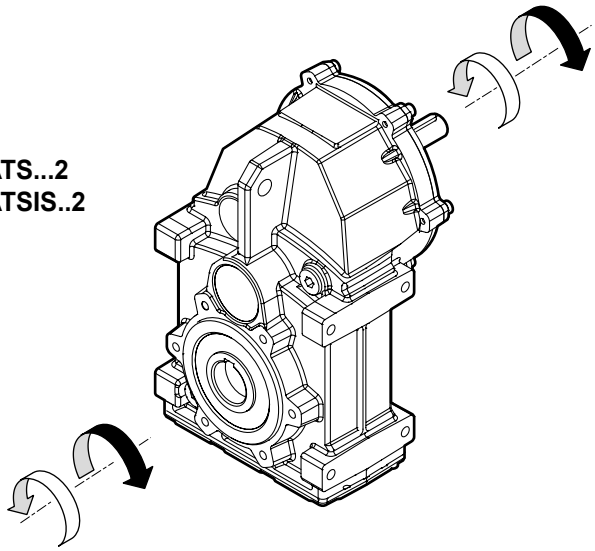

ATS...3
ATSIS..3

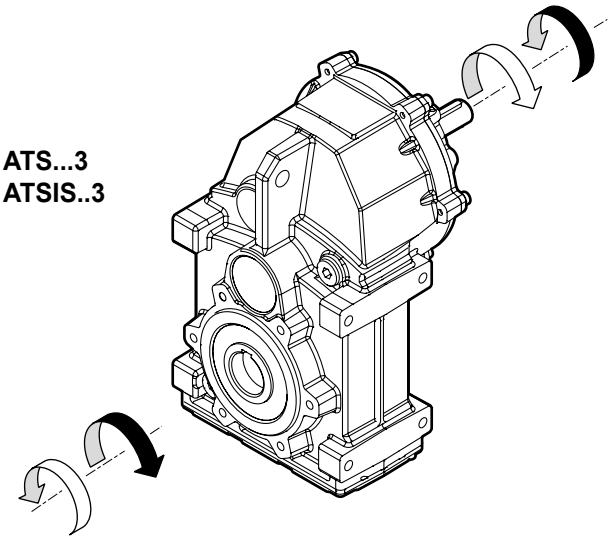

Simbologia — *Symbols*

n_1	[min^{-1}]	Velocità in ingresso / *Input speed*
n_2	[min^{-1}]	Velocità in uscita / *Output speed*
i		Rapporto di riduzione / *Ratio*
P_1	[kW]	Potenza in entrata / *Input power*
M_2	[Nm]	Coppia nominale in uscita in funzione di P_1 / *Output torque referred to P_1*
Pn_1	[kW]	Potenza nominale in entrata / *Nominal input power*
Mn_2	[Nm]	Coppia nominale in uscita in funzione di Pn_1 / *Nominal output torque referred to Pn_1*
sf		Fattore di servizio / *Service factor*
R_2	[N]	Carico radiale ammissibile in uscita / *Permitted output radial load*
A_2	[N]	Carico assiale ammissibile in uscita / *Permitted output axial load*

Lubrificazione — *Lubrication*

Tutti i motoriduttori sono forniti completi di lubrificante sintetico viscosità 320, pertanto possono essere installati in qualunque posizione di montaggio e non necessitano di manutenzione.

Permanent synthetic oil long-life lubrication (viscosity grade 320) makes it possible to use the gearmotors in all mounting positions; for this reason they can be installed in any assembly position and do not require maintenance.

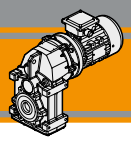

Carichi radiali

Radial loads

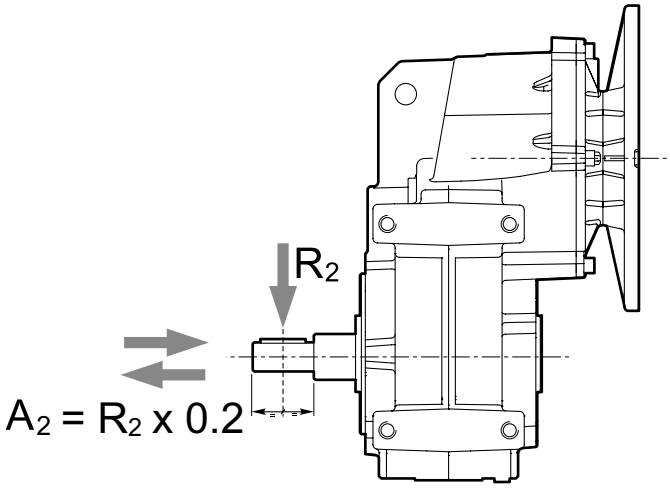

n_2 [min^{-1}]	R_2 [N]	
	ATS 902 ATS 903	ATS 912 ATS 913
240	2400	3600
180	2400	4200
150	2400	4200
120	2500	4600
100	2800	4800
85	3090	5100
70	3150	5250
55	3630	6000
40	4440	6900
30	5100	7800
20	6000	9500
15	6000	10000
10	6000	10000
5	6000	10000

Quando il carico radiale risultante non è applicato sulla mezzeria dell'albero occorre calcolare quello effettivo con la seguente formula:

When the resulting radial load is not applied on the centre line of the shaft it is necessary to calculate the effective load with the following formula:

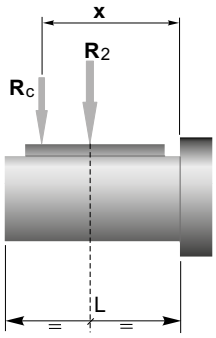

	ATS 902 ATS 903	ATS 912 ATS 913
a	152	174.5
b	97	114.5
R_{2MAX}	6000	10000

$$R_c = \frac{R_2 \cdot a}{(b+x)} \leq R_{2MAX}$$

$$R \leq R_c$$

a, b = valori riportati nella tabella
a, b = values given in the table

Dati tecnici — n_1 1400 min^{-1} — *Technical data*

	n_2 [min^{-1}]	Mn_2 [Nm]	Pn_1 [kW]	i	IEC Motori applicabili / *IEC Motor adapters*				
ATSIS 902					**71 B5**	**80 B5/B14**	**90 B5/B14**	**100 B5/B14**	**112 B5/B14**
	239	200	5.2	5.87	**B**				
	178	250	4.9	7.87	**B**				
	148	300	4.8	9.47	**B**				
	121	350	4.6	11.53	**B**				
	106	350	4.0	13.26	**B**				
	89.3	350	3.4	15.68	**B**				
	84.0	350	3.2	16.68	**B**				*
	73.3	400	3.2	19.09	**B**				*
	63.7	400	2.8	21.96	**B**				*
	52.8	400	2.3	26.50	**B**				*
	50.7	400	2.2	27.61	**B**				*
	47.2	400	2.1	29.65	**B**				*
	41.8	400	1.8	33.49	**B**			*	*
	39.0	400	1.7	35.87	**B**			*	*
	36.6	400	1.6	38.29	**B**			*	*
	31.9	400	1.4	43.88	**B**			*	*
	28.5	400	1.3	49.09	**B**			*	*
	26.6	400	1.2	52.71	**B**			*	*
	25.2	400	1.1	55.45	**B**			*	*
	22.1	400	0.98	63.41	**B**		*	*	*
	19.0	400	0.85	73.64	**B**		*	*	*
	16.0	400	0.71	87.27	**B**		*	*	*

ATSIS 903				**63 B5**	**71 B5/B14**	**80 B5/B14**	**90 B5/B14**
14.0	400	0.62	100.33				*
11.1	400	0.50	125.89				*
10.6	400	0.47	131.65				*
10.0	400	0.45	139.88			*	*
9.3	400	0.41	151.07			*	*
8.4	400	0.38	166.13			*	*
8.1	400	0.36	172.40			*	*
6.7	400	0.30	208.45			*	*
6.3	400	0.28	223.41			*	*
5.6	400	0.25	250.14			*	*
4.3	400	0.19	323.65		*	*	*
4.1	400	0.18	345.59		*	*	*
3.7	400	0.17	376.15		*	*	*
3.3	400	0.15	424.21		*	*	*

N.B.
Le aree evidenziate indicano l'applicabilità della corrispondente grandezza motore.
B = Boccola di riduzione in acciaio.

*** =** Il fattore di servizio (**sf**) deve essere scelto in funzione dell'applicazione: si prega di contattare il nostro Servizio Tecnico.

Prima di eseguire la scelta del motoriduttore riferirsi alle prestazioni elencate nelle tabelle dalla pag. F8 alla pag. F11

N.B.
Highlighted areas indicate motor inputs available on each size of unit.
***B** = Metal shaft sleeve.*

**** =** The service factor (**sf**) has to be selected depending on application: please contact our Technical Department.*

Before selecting any gearbox, please read the performance values shown in the tables on page F8 to F11.

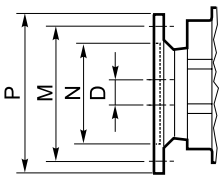

Dimensioni IEC / *IEC Dimensions*									
	63 B5	**71 B5**	**71 B14**	**80 B5**	**80 B14**	**90 B5**	**90 B14**	**100/112 B5**	**100/112 B14**
N	95	110	70	130	80	130	95	180	110
M	115	130	85	165	100	165	115	215	130
P	140	160	105	200	120	200	140	250	160
D	11	14		19		24		28	

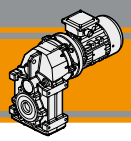

Dati tecnici — n_1 1400 min^{-1} — *Technical data*

	n_2 [min^{-1}]	Mn_2 [Nm]	Pn_1 [kW]	i	IEC Motori applicabili *IEC Motor adapters*				
ATSIS 912					**71 B5**	**80 B5/B14**	**90 B5/B14**	**100 B5/B14**	**112 B5/B14**
	245.0	350	9.4	5.71	B				
	183	350	7.0	7.66	B				
	158	400	6.9	8.85	B				
	152	400	6.6	9.22	B				
	125	400	5.4	11.23	B				
	118	400	5.1	11.87	B				
	108	500	5.9	12.92	B				
	98.0	500	5.3	14.29	B				
	86.2	500	4.7	16.24	B				
	80.5	500	4.4	17.39	B				
	70.0	600	4.6	20.01	B				
	66.3	600	4.3	21.10	B				
	55.6	600	3.6	25.16	B				
	54.2	600	3.5	25.81	B				*
	48.5	600	3.2	28.88	B				*
	42.8	600	2.9	32.69	B				*
	37.5	600	2.5	37.30	B				*
	35.0	600	2.3	39.98	B				*
	31.3	600	2.1	44.73	B				*
	27.7	600	1.9	50.53	B			*	*
	24.2	600	1.6	57.77	B			*	*
	20.9	600	1.4	67.09	B			*	*
	17.6	600	1.2	79.52	B			*	*

					63 B5	**71 B5/B14**	**80 B5/B14**	**90 B5/B14**
ATSIS913								
	17.0	600	1.1	82.28				
	14.9	600	1.0	93.96				
	13.8	600	0.92	101.41				*
	11.4	600	0.76	122.61				*
	10.7	600	0.71	131.41				*
	9.5	600	0.64	147.13				*
	8.9	600	0.60	157.08				*
	7.4	600	0.49	189.92				*
	6.9	600	0.46	203.55			*	*
	6.1	600	0.41	227.91			*	*
	4.7	600	0.32	294.88			*	*
	4.4	600	0.30	314.87			*	*
	4.1	600	0.27	342.72			*	*
	3.6	600	0.24	386.51			*	*

N.B.
Le aree evidenziate indicano l'applicabilità della corrispondente grandezza motore.
B = Boccola di riduzione in acciaio.

*** =** Il fattore di servizio (**sf**) deve essere scelto in funzione dell'applicazione: si prega di contattare il nostro Servizio Tecnico.

Prima di eseguire la scelta del motoriduttore riferirsi alle prestazioni elencate nelle tabelle dalla pag. F8 alla pag. F11

N.B.
Highlighted areas indicate motor inputs available on each size of unit.
***B** = Metal shaft sleeve.*

**** =** The service factor (**sf**) has to be selected depending on application: please contact our Technical Department.*

Before selecting any gearbox, please read the performance values shown in the tables on page F8 to F11.

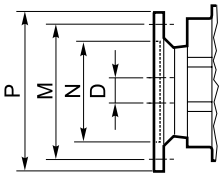

Dimensioni IEC / *IEC Dimensions*									
	63 B5	**71 B5**	**71 B14**	**80 B5**	**80 B14**	**90 B5**	**90 B14**	**100/112 B5**	**100/112 B14**
N	95	110	70	130	80	130	95	180	110
M	115	130	85	165	100	165	115	215	130
P	140	160	105	200	120	200	140	250	160
D	11	14		19		24		28	

Dati tecnici

Technical data

P_1 [kW]	n_2 [min^{-1}]	M_2 [Nm]	sf	i		IEC
0.12						
63A4 (1400 min^{-1})	**14.0**	77	5.2	100.33	**ATS903**	**B5**
	11.1	97	4.1	125.89		**B5**
	10.6	101	3.9	131.65		**B5**
	10.0	108	3.7	139.88		**B5**
	9.3	116	3.4	151.07		**B5**
	8.4	128	3.1	166.13		**B5**
	8.1	133	3.0	172.40		**B5**
	6.7	160	2.5	208.45		**B5**
	6.3	172	2.3	223.41		**B5**
	5.6	192	2.1	250.14		**B5**
	4.3	249	1.6	323.65		**B5**
	4.1	266	1.5	345.59		**B5**
	3.7	289	1.4	376.15		**B5**
	3.3	326	1.2	424.21		**B5**
	6.9	157	3.8	203.55	**ATS913**	**B5**
	6.1	175	3.4	227.91		**B5**
	4.7	227	2.6	294.88		**B5**
	4.4	242	2.5	314.87		**B5**
	4.1	264	2.3	342.72		**B5**
	3.6	297	2.0	386.51		**B5**
0.18						
63B4 (1400 min^{-1})	**14.0**	116	3.5	100.33	**ATS903**	**B5**
	11.1	145	2.8	125.89		**B5**
	10.6	152	2.6	131.65		**B5**
	10.0	161	2.5	139.88		**B5**
	9.3	174	2.3	151.07		**B5**
	8.4	192	2.1	166.13		**B5**
	8.1	199	2.0	172.40		**B5**
	6.7	241	1.7	208.45		**B5**
	6.3	258	1.6	223.41		**B5**
	5.6	289	1.4	250.14		**B5**
	4.3	374	1.1	323.65		**B5**
	4.1	399	1.0	345.59		**B5**
	3.7	434	0.9	376.15		**B5**
	3.3	490	0.8	424.21		**B5**
	9.5	170	3.5	147.13	**ATS913**	**B5**
	8.9	181	3.3	157.08		**B5**
	7.4	219	2.7	189.92		**B5**
	6.9	235	2.6	203.55		**B5**
	6.1	263	2.3	227.91		**B5**
	4.7	340	1.8	294.88		**B5**
	4.4	363	1.7	314.87		**B5**
	4.1	396	1.5	342.72		**B5**
	3.6	446	1.3	386.51		**B5**

P_1 [kW]	n_2 [min^{-1}]	M_2 [Nm]	sf	i		IEC
0.25						
71A4 (1400 min^{-1})	**238**	10	20.8	5.87	**ATS902**	**B5**
	178	13	19.4	7.87		**B5**
	148	16	19.3	9.47		**B5**
	121	19	18.5	11.53		**B5**
	106	22	16.1	13.26		**B5**
	89.3	26	13.6	15.68		**B5**
	84.0	27	12.8	16.68		**B5**
	73.3	31	12.8	19.09		**B5**
	63.7	36	11.1	21.96		**B5**
	52.8	43	9.2	26.50		**B5**
	50.7	45	8.8	27.61		**B5**
	47.2	49	8.2	29.65		**B5**
	41.8	55	7.3	33.49		**B5**
	39.0	59	6.8	35.87		**B5**
	36.6	61	6.5	38.29		**B5**
	31.9	70	5.7	43.88		**B5**
	28.5	79	5.1	49.09		**B5**
	26.6	84	4.7	52.71		**B5**
	25.2	89	4.5	55.45		**B5**
	22.1	102	3.9	63.41		**B5**
	19.0	118	3.4	73.64		**B5**
	16.0	140	2.9	87.27		**B5**
	14.0	161	2.5	100.33	**ATS903**	**B5/B14**
	11.1	202	2.0	125.89		**B5/B14**
	10.6	211	1.9	131.65		**B5/B14**
	10.0	224	1.8	139.88		**B5/B14**
	9.3	242	1.7	151.07		**B5/B14**
	8.4	266	1.5	166.13		**B5/B14**
	8.1	276	1.4	172.40		**B5/B14**
	6.7	334	1.2	208.45		**B5/B14**
	6.3	358	1.1	223.41		**B5/B14**
	5.6	401	1.0	250.14		**B5/B14**
	13.8	163	3.7	101.41	**ATS913**	**B5/B14**
	11.4	197	3.1	122.61		**B5/B14**
	10.7	211	2.8	131.41		**B5/B14**
	9.5	236	2.5	147.13		**B5/B14**
	8.9	252	2.4	157.08		**B5/B14**
	7.4	304	2.0	189.92		**B5/B14**
	6.9	326	1.8	203.55		**B5/B14**
	6.1	365	1.6	227.91		**B5/B14**
	4.7	473	1.3	294.88		**B5/B14**
	4.4	505	1.2	314.87		**B5/B14**
	4.1	549	1.1	342.72		**B5/B14**
	3.6	620	1.0	386.51		**B5/B14**

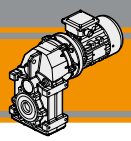

Dati tecnici

Technical data

P_1 [kW]	n_2 [min^{-1}]	M_2 [Nm]	sf	i		IEC
0.37						
71B4 (1400 min^{-1})	**239**	14	14.1	5.87	**ATS902**	**B5**
	178	19	13.1	7.87		**B5**
	148	23	13.1	9.47		**B5**
	121	28	12.5	11.53		**B5**
	106	32	10.9	13.26		**B5**
	89.3	38	9.2	15.68		**B5**
	84.0	40	8.7	16.68		**B5**
	73.3	46	8.6	19.09		**B5**
	63.7	53	7.5	21.96		**B5**
	52.8	64	6.2	26.50		**B5**
	50.7	67	6.0	27.61		**B5**
	47.2	72	5.6	29.65		**B5**
	41.8	81	4.9	33.49		**B5**
	39.0	87	4.6	35.87		**B5**
	36.6	91	4.4	38.29		**B5**
	31.9	104	3.8	43.88		**B5**
	28.5	116	3.4	49.09		**B5**
	26.6	125	3.2	52.71		**B5**
	25.2	132	3.0	55.45		**B5**
	22.1	150	2.7	63.41		**B5**
	19.0	175	2.3	73.64		**B5**
	16.0	207	1.9	87.27		**B5**
	14.0	238	1.7	100.33	**ATS903**	**B5/B14**
	11.1	299	1.3	125.89		**B5/B14**
	10.6	312	1.3	131.65		**B5/B14**
	10.0	332	1.2	139.88		**B5/B14**
	9.3	358	1.1	151.07		**B5/B14**
	8.4	394	1.0	166.13		**B5/B14**
	8.1	409	1.0	172.40		**B5/B14**
	24.2	137	4.4	57.77	**ATS912**	**B5**
	20.9	159	3.8	67.09		**B5**
	17.6	189	3.2	79.52		**B5**
	17.0	195	3.1	82.28	**ATS913**	**B5/B14**
	14.9	223	2.7	93.96		**B5/B14**
	13.8	241	2.5	101.41		**B5/B14**
	11.4	291	2.1	122.61		**B5/B14**
	10.7	312	1.9	131.41		**B5/B14**
	9.5	349	1.7	147.13		**B5/B14**
	8.9	373	1.6	157.08		**B5/B14**
	7.4	451	1.3	189.92		**B5/B14**
	6.9	483	1.2	203.55		**B5/B14**
	6.1	541	1.1	227.91		**B5/B14**
	4.7	700	0.9	294.88		**B5/B14**

P_1 [kW]	n_2 [min^{-1}]	M_2 [Nm]	sf	i		IEC
0.55						
80A4 (1400 min^{-1})	**239**	21	9.5	5.87	**ATS902**	**B5/B14**
	178	28	8.8	7.87		**B5/B14**
	148	34	8.8	9.47		**B5/B14**
	121	42	8.4	11.53		**B5/B14**
	106	48	7.3	13.26		**B5/B14**
	89.3	56	6.2	15.68		**B5/B14**
	84.0	60	5.8	16.68		**B5/B14**
	73.3	69	5.8	19.09		**B5/B14**
	63.7	79	5.1	21.96		**B5/B14**
	52.8	95	4.2	26.50		**B5/B14**
	50.7	99	4.0	27.61		**B5/B14**
	47.2	107	3.7	29.65		**B5/B14**
	41.8	121	3.3	33.49		**B5/B14**
	39.0	129	3.1	35.87		**B5/B14**
	36.6	135	3.0	38.29		**B5/B14**
	31.9	155	2.6	43.88		**B5/B14**
	28.5	173	2.3	49.09		**B5/B14**
	26.6	186	2.2	52.71		**B5/B14**
	25.2	196	2.0	55.45		**B5/B14**
	22.1	224	1.8	63.41		**B5/B14**
	19.0	260	1.5	73.64		**B5/B14**
	16.0	308	1.3	87.27		**B5/B14**
	14.0	354	1.1	100.33	**ATS903**	**B5/B14**
	11.1	444	0.9	125.89		**B5/B14**
	10.6	464	0.9	131.65		**B5/B14**
	31.3	158	3.8	44.73	**ATS912**	**B5/B14**
	27.7	178	3.4	50.53		**B5/B14**
	24.2	204	2.9	57.77		**B5/B14**
	20.9	237	2.5	67.09		**B5/B14**
	17.6	280	2.1	79.52		**B5/B14**
	17.0	290	2.1	82.28	**ATS913**	**B5/B14**
	14.9	331	1.8	93.96		**B5/B14**
	13.8	358	1.7	101.41		**B5/B14**
	11.4	432	1.4	122.61		**B5/B14**
	10.7	463	1.3	131.41		**B5/B14**
	9.5	519	1.2	147.13		**B5/B14**
	8.9	554	1.1	157.08		**B5/B14**
	7.4	670	0.9	189.92		**B5/B14**

Dati tecnici

Technical data

P_1 [kW]	n_2 [min^{-1}]	M_2 [Nm]	sf	i		IEC
0.75						
80B4 (1400 min^{-1})	**239**	29	6.9	5.87	**ATS902**	**B5/B14**
	178	39	6.5	7.87		**B5/B14**
	148	47	6.4	9.47		**B5/B14**
	121	57	6.2	11.53		**B5/B14**
	106	65	5.4	13.26		**B5/B14**
	89.3	77	4.5	15.68		**B5/B14**
	84.0	82	4.3	16.68		**B5/B14**
	73.3	94	4.3	19.09		**B5/B14**
	63.7	108	3.7	21.96		**B5/B14**
	52.8	130	3.1	26.50		**B5/B14**
	50.7	136	2.9	27.61		**B5/B14**
	47.2	146	2.7	29.65		**B5/B14**
	41.8	164	2.4	33.49		**B5/B14**
	39.0	176	2.3	35.87		**B5/B14**
	36.6	184	2.2	38.29		**B5/B14**
	31.9	211	1.9	43.88		**B5/B14**
	28.5	236	1.7	49.09		**B5/B14**
	26.6	253	1.6	52.71		**B5/B14**
	25.2	267	1.5	55.45		**B5/B14**
	22.1	305	1.3	63.41		**B5/B14**
	19.0	354	1.1	73.64		**B5/B14**
	16.0	420	1.0	87.27		**B5/B14**
	42.8	157	3.8	32.69	**ATS912**	**B5/B14**
	37.5	179	3.3	37.30		**B5/B14**
	35.0	192	3.1	39.98		**B5/B14**
	31.3	215	2.8	44.73		**B5/B14**
	27.7	243	2.5	50.53		**B5/B14**
	24.2	278	2.2	57.77		**B5/B14**
	20.9	323	1.9	67.09		**B5/B14**
	17.6	382	1.6	79.52		**B5/B14**
	17.0	396	1.5	82.28	**ATS913**	**B5/B14**
	14.9	452	1.3	93.96		**B5/B14**
	13.8	488	1.2	101.41		**B5/B14**
	11.4	590	1.0	122.61		**B5/B14**
	10.7	632	0.9	131.41		**B5/B14**

P_1 [kW]	n_2 [min^{-1}]	M_2 [Nm]	sf	i		IEC
1.1						
90S4 (1400 min^{-1})	**239**	42	4.7	5.87	**ATS902**	**B5/B14**
	178	57	4.4	7.87		**B5/B14**
	148	68	4.4	9.47		**B5/B14**
	121	83	4.2	11.53		**B5/B14**
	106	96	3.7	13.26		**B5/B14**
	89.3	113	3.1	15.68		**B5/B14**
	84.0	120	2.9	16.68		**B5/B14**
	73.3	138	2.9	19.09		**B5/B14**
	63.7	158	2.5	21.96		**B5/B14**
	52.8	191	2.1	26.50		**B5/B14**
	50.7	199	2.0	27.61		**B5/B14**
	47.2	214	1.9	29.65		**B5/B14**
	41.8	241	1.7	33.49		**B5/B14**
	39.0	258	1.5	35.87		**B5/B14**
	36.6	270	1.5	38.29		**B5/B14**
	31.9	310	1.3	43.88		**B5/B14**
	28.5	346	1.2	49.09		**B5/B14**
	26.6	372	1.1	52.71		**B5/B14**
	25.2	391	1.0	55.45		**B5/B14**
	66.3	152	3.9	21.10	**ATS912**	**B5/B14**
	55.6	181	3.3	25.16		**B5/B14**
	54.2	186	3.2	25.81		**B5/B14**
	48.5	204	2.9	28.88		**B5/B14**
	42.8	231	2.6	32.69		**B5/B14**
	37.5	263	2.3	37.30		**B5/B14**
	35.0	282	2.1	39.98		**B5/B14**
	31.3	315	1.9	44.73		**B5/B14**
	27.7	356	1.7	50.53		**B5/B14**
	24.2	407	1.5	57.77		**B5/B14**
	20.9	473	1.3	67.09		**B5/B14**
	17.6	561	1.1	79.52		**B5/B14**
	17.0	580	1.0	82.28	**ATS913**	**B5/B14**
	14.9	663	0.9	93.96		**B5/B14**

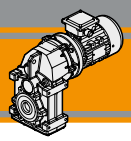

Dati tecnici

Technical data

P_1 [kW]	n_2 [min^{-1}]	M_2 [Nm]	sf	i		IEC
1.5						
90L4 (1400 min^{-1})	**239**	58	3.5	5.87	**ATS902**	**B5/B14**
	178	77	3.2	7.87		**B5/B14**
	148	93	3.2	9.47		**B5/B14**
	121	113	3.1	11.53		**B5/B14**
	106	130	2.7	13.26		**B5/B14**
	89.3	154	2.3	15.68		**B5/B14**
	84.0	164	2.1	16.68		**B5/B14**
	73.3	188	2.1	19.09		**B5/B14**
	63.7	216	1.9	21.96		**B5/B14**
	52.8	260	1.5	26.50		**B5/B14**
	50.7	271	1.5	27.61		**B5/B14**
	47.2	291	1.4	29.65		**B5/B14**
	41.8	329	1.2	33.49		**B5/B14**
	39.0	352	1.1	35.87		**B5/B14**
	36.6	368	1.1	38.29		**B5/B14**
	31.9	422	0.9	43.88		**B5/B14**
	108.4	127	3.9	12.92	**ATS912**	**B5/B14**
	98.0	140	3.6	14.29		**B5/B14**
	86.2	160	3.1	16.24		**B5/B14**
	80.5	171	2.9	17.39		**B5/B14**
	70.0	197	3.1	20.01		**B5/B14**
	66.3	207	2.9	21.10		**B5/B14**
	55.6	247	2.4	25.16		**B5/B14**
	54.2	254	2.4	25.81		**B5/B14**
	48.5	278	2.2	28.88		**B5/B14**
	42.8	314	1.9	32.69		**B5/B14**
	37.5	359	1.7	37.30		**B5/B14**
	35.0	385	1.6	39.98		**B5/B14**
	31.3	430	1.4	44.73		**B5/B14**
	27.7	486	1.2	50.53		**B5/B14**
	24.2	556	1.1	57.77		**B5/B14**
2.2						
100LA4 (1400 min^{-1})	**239**	85	2.4	5.87	**ATS902**	**B5/B14**
	178	113	2.2	7.87		**B5/B14**
	148	136	2.2	9.47		**B5/B14**
	121	166	2.1	11.53		**B5/B14**
	106	191	1.8	13.26		**B5/B14**
	89.3	226	1.5	15.68		**B5/B14**
	84.0	240	1.5	16.68		**B5/B14**
	73.3	275	1.5	19.09		**B5/B14**
	63.7	316	1.3	21.96		**B5/B14**
	52.8	382	1.0	26.50		**B5/B14**
	50.7	398	1.0	27.61		**B5/B14**
	47.2	427	0.9	29.65		**B5/B14**
	245.0	82	4.3	5.71	**ATS912**	**B5/B14**
	182.7	110	3.2	7.66		**B5/B14**
	158.2	128	3.1	8.85		**B5/B14**
	151.8	133	3.0	9.22		**B5/B14**
	124.7	162	2.5	11.23		**B5/B14**
	117.9	171	2.3	11.87		**B5/B14**
	108.4	186	2.7	12.92		**B5/B14**
	98.0	206	2.4	14.29		**B5/B14**
	86.2	234	2.1	16.24		**B5/B14**
	80.5	251	2.0	17.39		**B5/B14**
	70.0	288	2.1	20.01		**B5/B14**
	66.3	304	2.0	21.10		**B5/B14**
	55.6	362	1.7	25.16		**B5/B14**
	54.2	372	1.6	25.81		**B5/B14**
	48.5	407	1.5	28.88		**B5/B14**

P_1 [kW]	n_2 [min^{-1}]	M_2 [Nm]	sf	i		IEC
2.2						
100LA4 (1400 min^{-1})	**42.8**	461	1.3	32.69	**ATS912**	**B5/B14**
	37.5	526	1.1	37.30		**B5/B14**
	35.0	564	1.1	39.98		**B5/B14**
	31.3	631	1.0	44.73		**B5/B14**
3.0						
100LB4 (1400 min^{-1})	**239**	115	1.7	5.87	**ATS902**	**B5/B14**
	178	155	1.6	7.87		**B5/B14**
	148	186	1.6	9.47		**B5/B14**
	121	227	1.5	11.53		**B5/B14**
	106	261	1.3	13.26		**B5/B14**
	89.3	308	1.1	15.68		**B5/B14**
	84.0	328	1.1	16.68		**B5/B14**
	73.3	375	1.1	19.09		**B5/B14**
	63.7	431	0.9	21.96		**B5/B14**
	245.0	112	3.1	5.71	**ATS912**	**B5/B14**
	182.7	151	2.3	7.66		**B5/B14**
	158.2	174	2.3	8.85		**B5/B14**
	151.8	181	2.2	9.22		**B5/B14**
	124.7	221	1.8	11.23		**B5/B14**
	117.9	233	1.7	11.87		**B5/B14**
	108.4	254	2.0	12.92		**B5/B14**
	98.0	281	1.8	14.29		**B5/B14**
	86.2	319	1.6	16.24		**B5/B14**
	80.5	342	1.5	17.39		**B5/B14**
	70.0	393	1.5	20.01		**B5/B14**
	66.3	415	1.4	21.10		**B5/B14**
	55.6	494	1.2	25.16		**B5/B14**
	54.2	507	1.2	25.81		**B5/B14**
	48.5	555	1.1	28.88		**B5/B14**
	42.8	629	1.0	32.69		**B5/B14**
4.0						
112M4 (1400 min^{-1})	**239**	154	1.3	5.87	**ATS902**	**B5/B14**
	178	206	1.2	7.87		**B5/B14**
	148	248	1.2	9.47		**B5/B14**
	121	302	1.2	11.53		**B5/B14**
	106	347	1.0	13.26		**B5/B14**
	89.3	411	0.9	15.68		**B5/B14**
	245.0	150	2.3	5.71	**ATS912**	**B5/B14**
	182.7	201	1.7	7.66		**B5/B14**
	158.2	232	1.7	8.85		**B5/B14**
	151.8	242	1.7	9.22		**B5/B14**
	124.7	294	1.4	11.23		**B5/B14**
	117.9	311	1.3	11.87		**B5/B14**
	108.4	338	1.5	12.92		**B5/B14**
	98.0	374	1.3	14.29		**B5/B14**
	86.2	425	1.2	16.24		**B5/B14**
	80.5	456	1.1	17.39		**B5/B14**
	70.0	524	1.1	20.01		**B5/B14**
	66.3	553	1.1	21.10		**B5/B14**
	55.6	659	0.9	25.16		**B5/B14**

Dimensioni *Dimensions*

ATS 902

ATS 902 U..

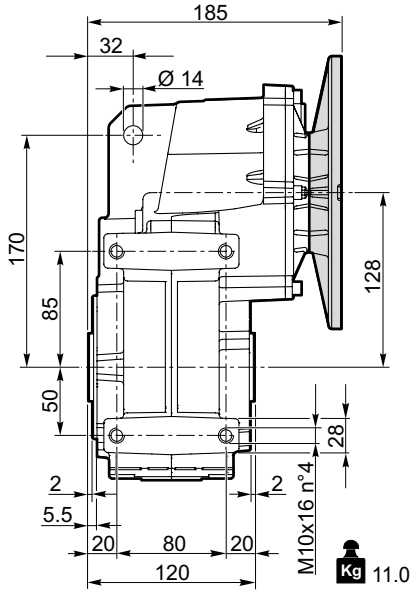

ATSIS 902 U..

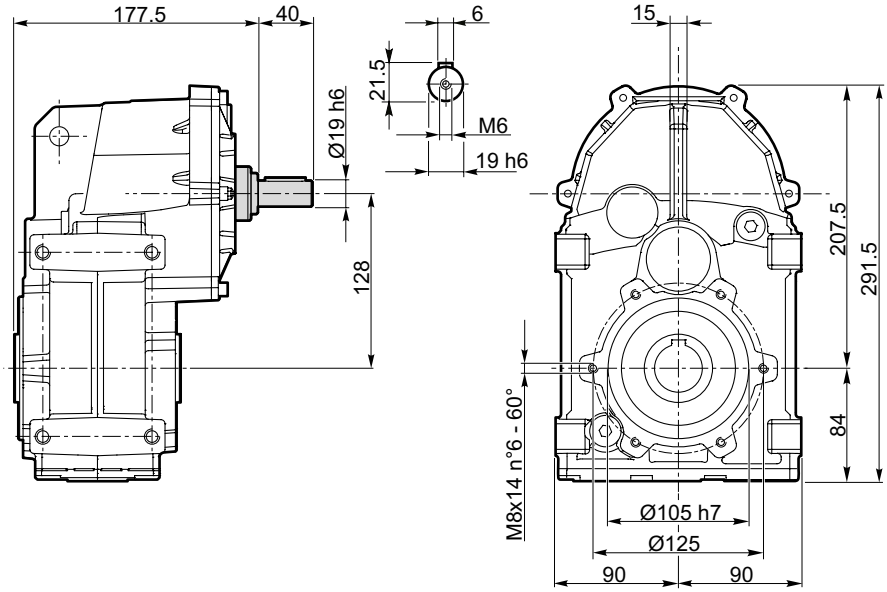

ATS 902 F..

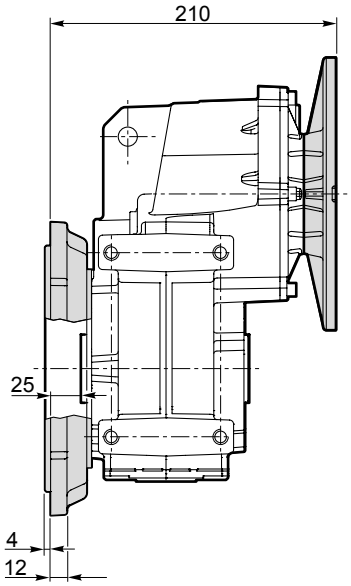

ATSIS 902 F..

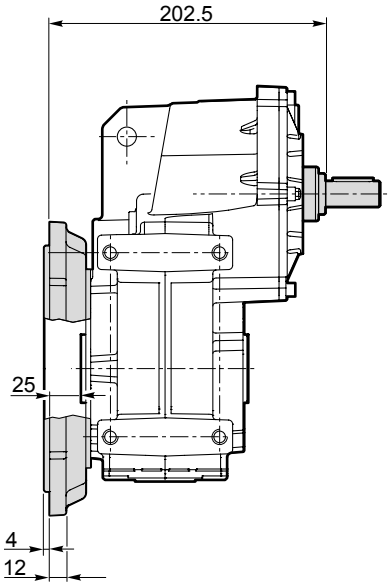

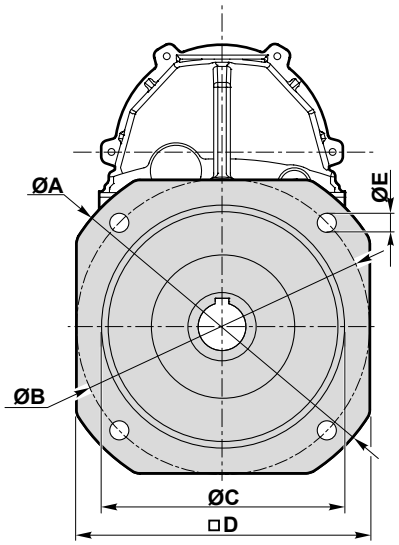

Versione **F** / ***F Version***							
ATS ATSIS	**ØA**	**ØB**	**ØC f7**	**□D**	**ØE**	**Flangia / *Flange***	
						Tipo / *Type*	Peso / *Weight* [kg]
902	200	165	130	165	11	**F200**	2
	250	215	180	215	14	**F250**	3.2

ATS 902.. D35 - ATSIS 902.. D35

Albero uscita cavo
Hollow output shaft

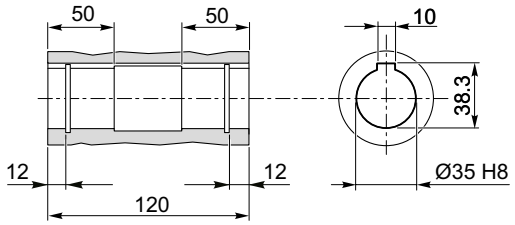

Flangia entrata
Input flange

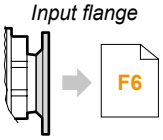

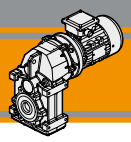

Dimensioni *Dimensions*

ATS 903

ATS 903 U..

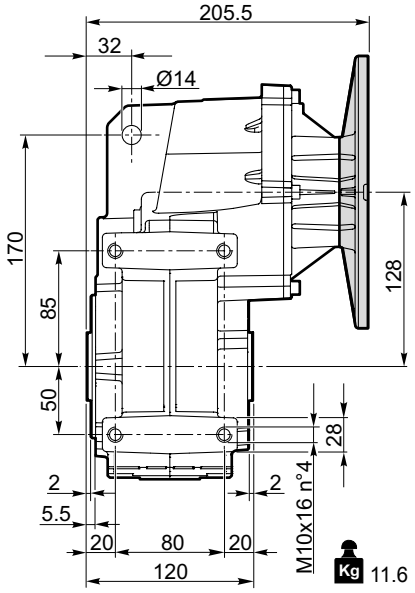

ATSIS 903 U..

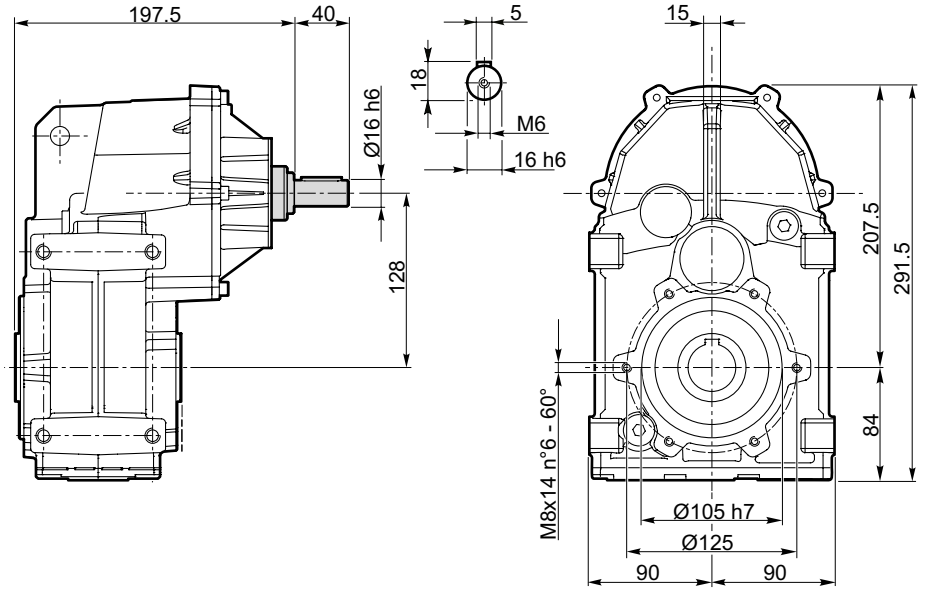

ATS 903 F..

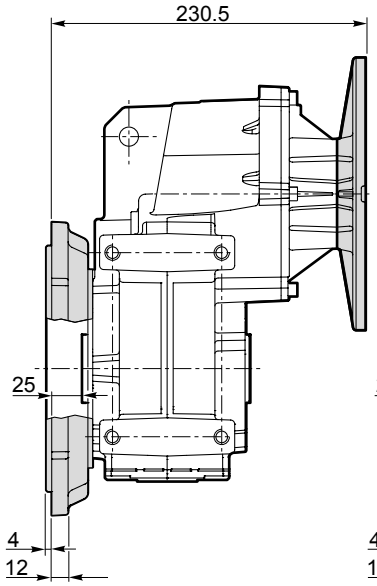

ATSIS 903 F..

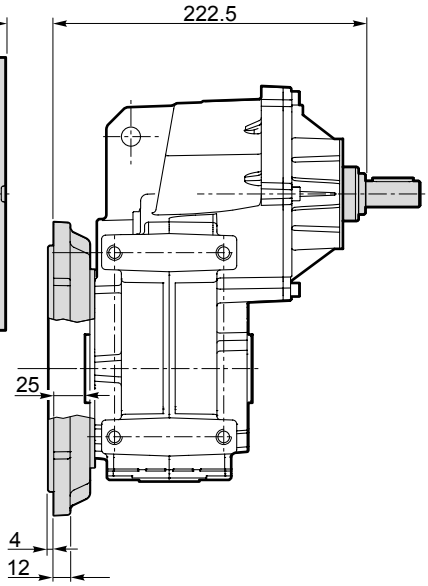

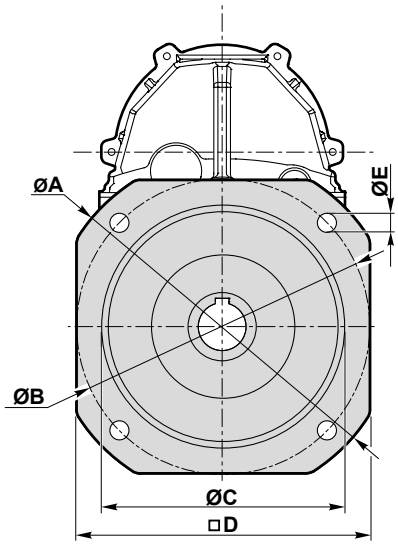

Versione **F** / ***F Version***							
ATS ATSIS	**ØA**	**ØB**	**ØC f7**	**□D**	**ØE**	**Flangia / *Flange***	
						Tipo / *Type*	Peso / *Weight* [kg]
903	200	165	130	165	11	**F200**	2
	250	215	180	215	14	**F250**	3.2

ATS 903.. D35 - ATSIS 903.. D35

Flangia entrata
Input flange

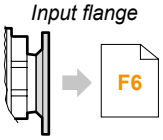

Albero uscita cavo
Hollow output shaft

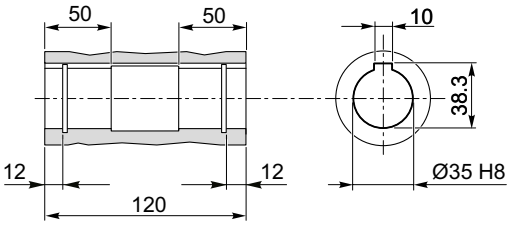

Dimensioni *Dimensions*

ATS 912

ATS 912 U..

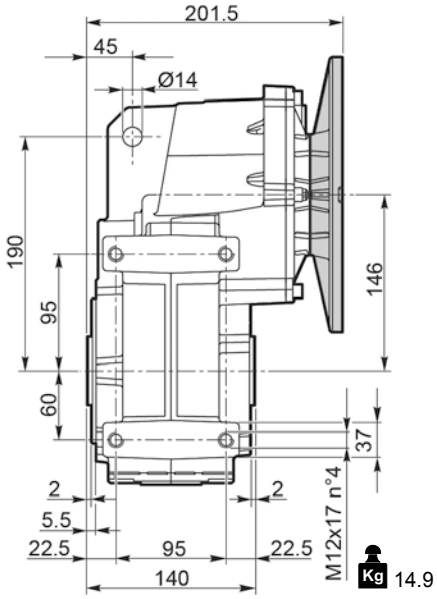

ATSIS 912 U..

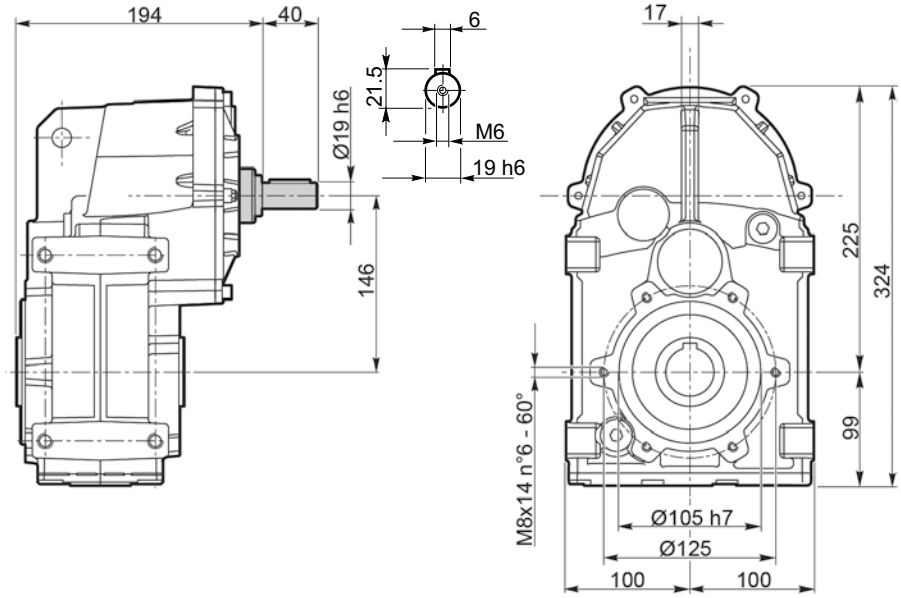

ATS 912 F..

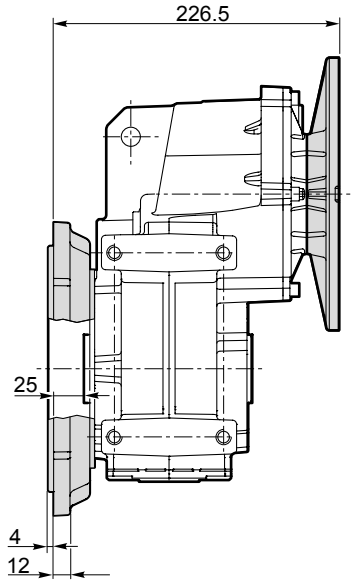

ATSIS 912 F..

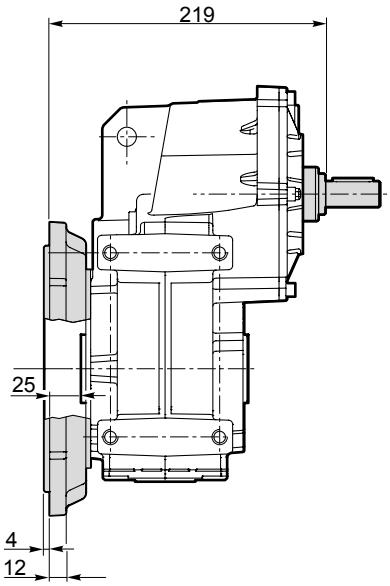

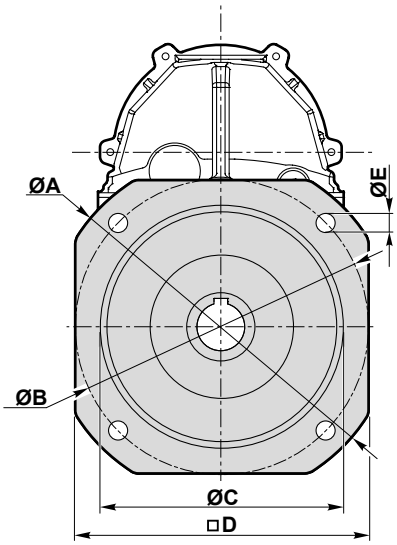

Versione **F** / ***F Version***							
ATS ATSIS	**ØA**	**ØB**	**ØC f7**	**□D**	**ØE**	**Flangia / *Flange***	
						Tipo / *Type*	Peso / *Weight* [kg]
912	200	165	130	165	11	**F200**	2
	250	215	180	215	14	**F250**	3.2

ATS 912.. D40 - ATSIS 912.. D40

Albero uscita cavo
Hollow output shaft

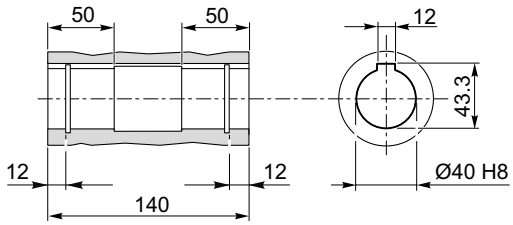

Flangia entrata
Input flange

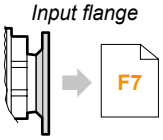

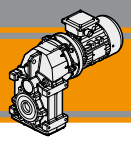

Dimensioni ***Dimensions***

ATS 913

ATS 913 U..

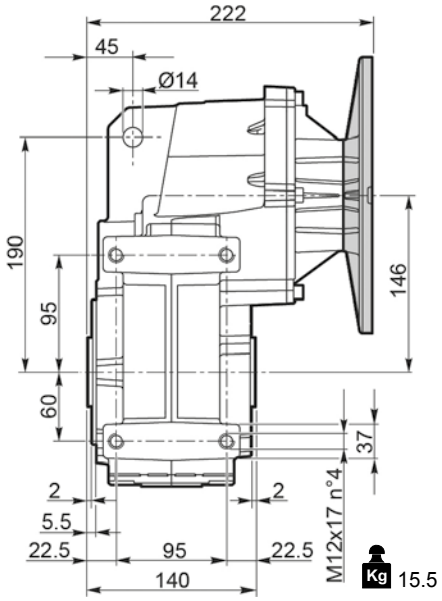

ATSIS 913 U..

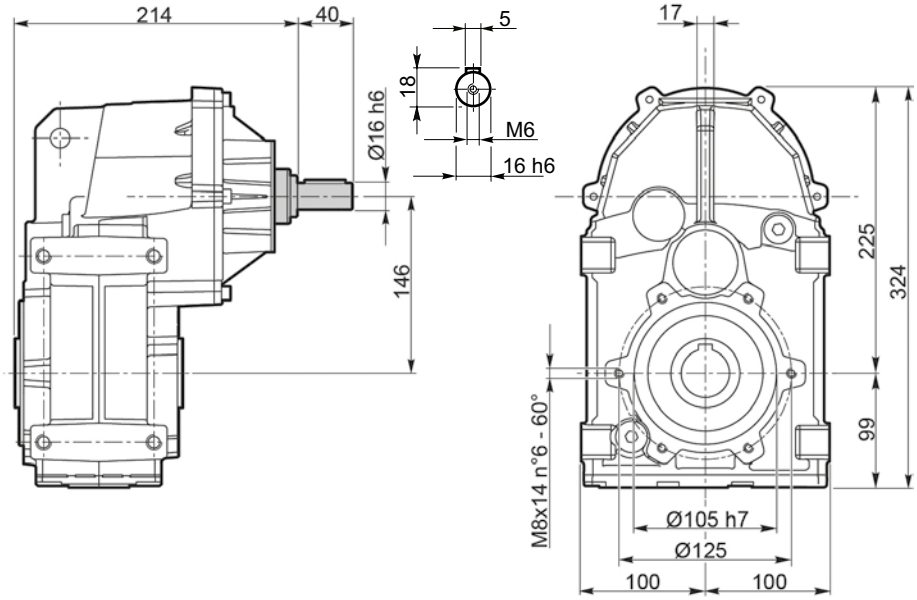

ATS 913 F..

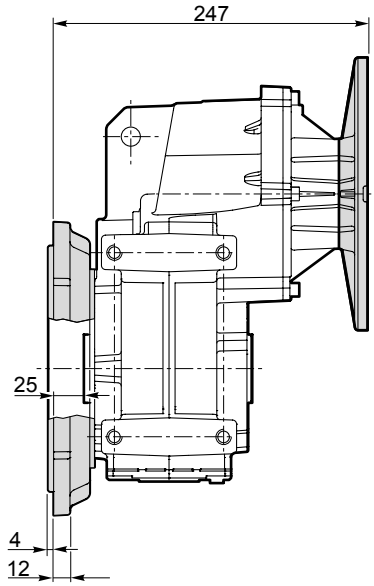

ATSIS 913 F..

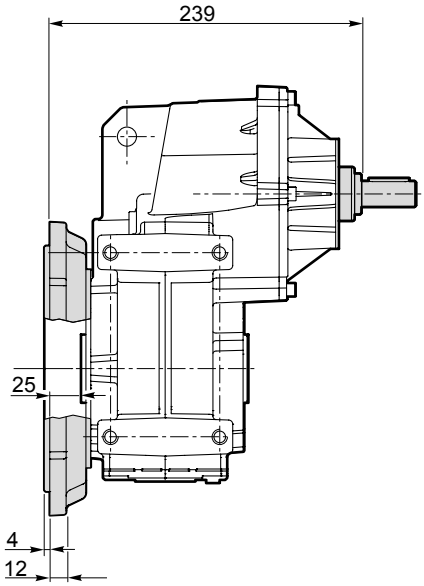

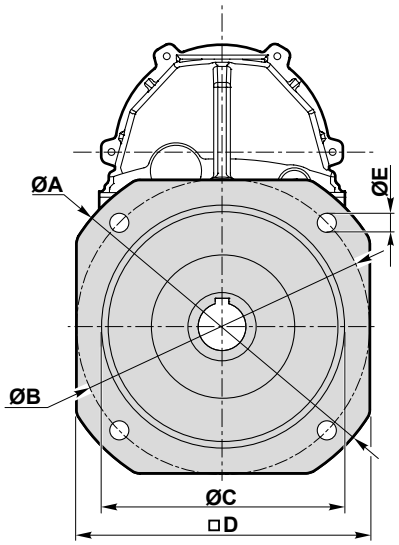

Versione **F** / ***F Version***							
ATS ATSIS	**ØA**	**ØB**	**ØC f7**	**□D**	**ØE**	**Flangia / *Flange***	
						Tipo / *Type*	Peso / *Weight* [kg]
913	200	165	130	165	11	**F200**	2
	250	215	180	215	14	**F250**	3.2

ATS 913.. D40 - ATSIS 913.. D40

Albero uscita cavo
Hollow output shaft

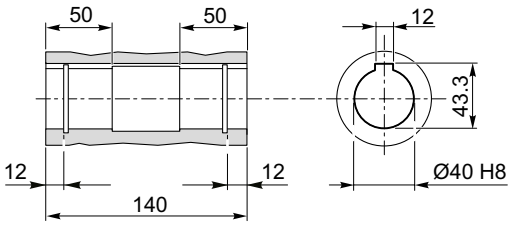

Flangia entrata
Input flange

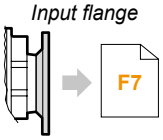

Accessori / *Accessories*

Albero lento semplice / *Single output shaft*

ATS90... U .. SZ

ATSIS90... U .. SZ

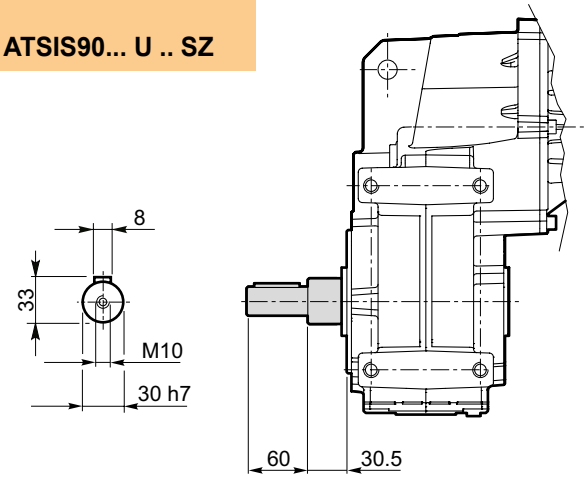

ATS90... F .. SZ

ATSIS90... F .. SZ

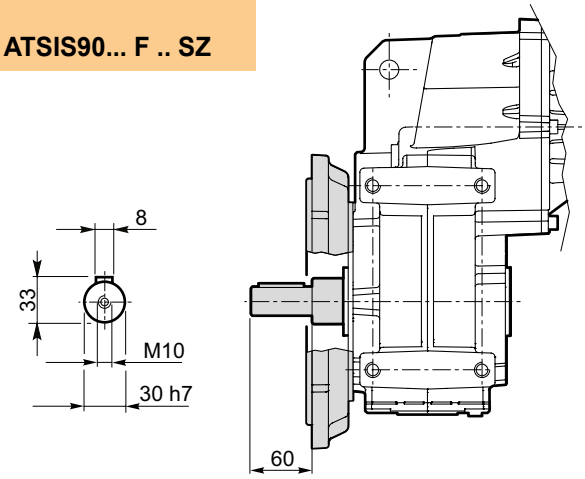

ATS91... U .. SZ

ATSIS91... U .. SZ

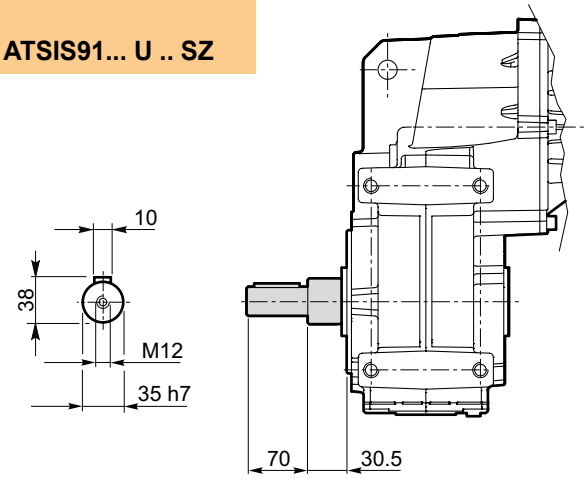

ATS91... F .. SZ

ATSIS91... F .. SZ

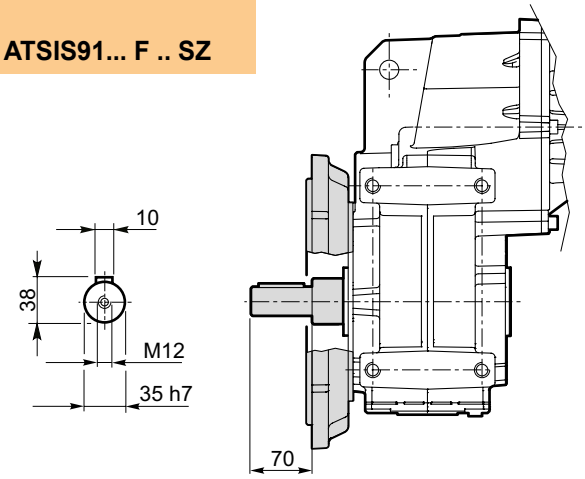

Albero lento con calettarore / *Output shaft with shrink disk*

ATS90... U .. G35

ATSIS90... U .. G35

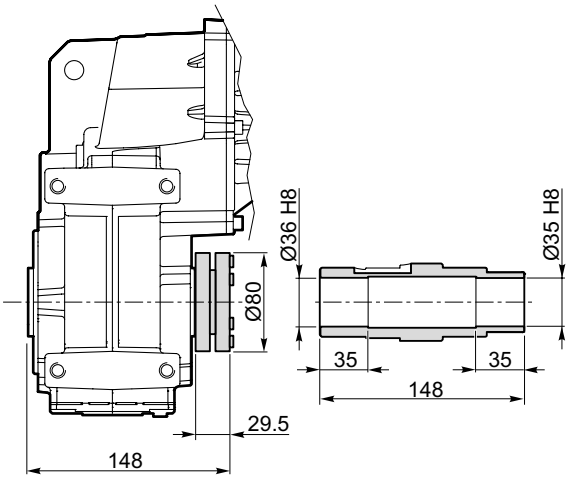

Kit albero uscita con calettatore disponibile a richiesta:
per le istruzioni di montaggio riferirsi al nostro Servizio Tecnico.

ATS91... U .. G40

ATSIS91... U .. G40

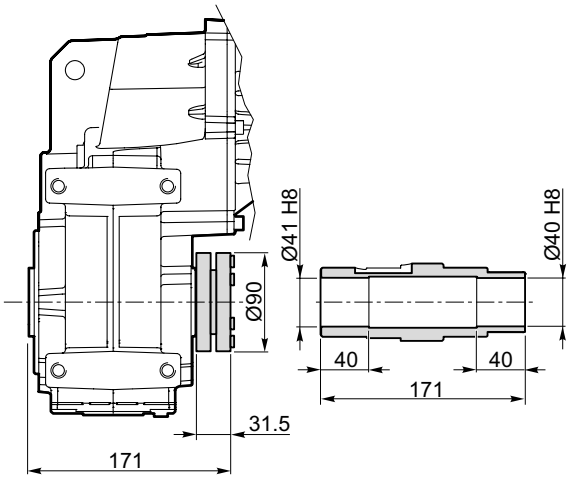

Output shaft kit with shrink disk available on request:
for assembly instructions please contact our Technical Service

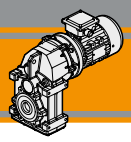

Accessori / *Accessories*

Kit di montaggio albero uscita / *Output shaft assembly kit*

ATS90...
ATS91...
ATSIS90...
ATSIS91...

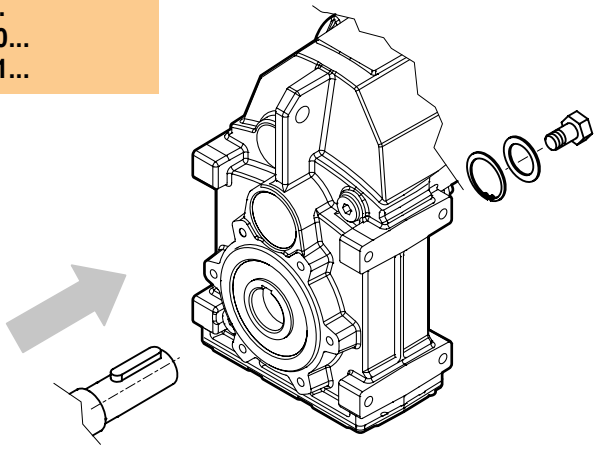

Kit di montaggio albero uscita disponibile a richiesta:
per le istruzioni di montaggio riferirsi al nostro Servizio Tecnico.

Output shaft assembly kit available upon request:
for assembly instructions please contact our Technical Assistance

Kit di smontaggio albero uscita / *Output shaft disassembly kit*

ATS90...
ATS91...
ATSIS90...
ATSIS91...

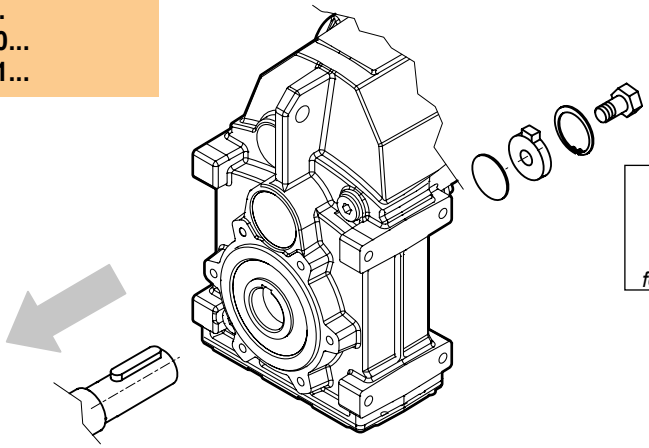

Kit di smontaggio albero uscita disponibile a richiesta:
per le istruzioni di montaggio riferirsi al nostro Servizio Tecnico.

Output shaft disassembly kit available upon request:
for assembly instructions please contact our Technical Assistance

Kit braccio di reazione / *Torque arm kit*

ATS90...U
ATS91...U
ATSIS90...U
ATSIS91...U

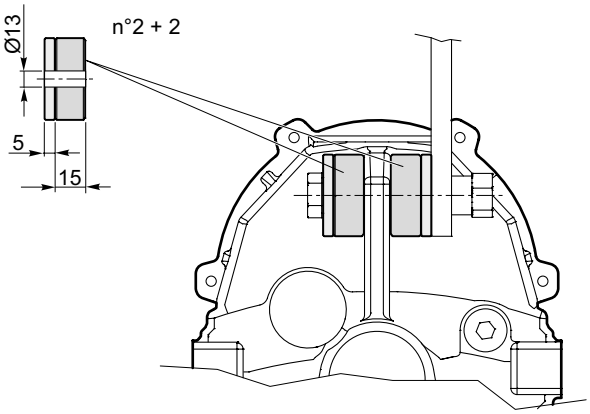

Kit braccio di reazione disponibile a richiesta:
per le istruzioni di montaggio riferirsi al nostro Servizio Tecnico.

Torque arm kit available upon request:
for assembly instructions please contact our Technical Assistance

MA TRANSTECNO S.A.P.I. DE C.V.
Av. Mundial # 176, Parque Industrial
JM Apodaca, Nuevo León,
C.P. 66600
MÉXICO
T +52 8113340920
info@transtecno.com.mx
www.transtecno.com.mx

TRANSTECNO SRL
Via Caduti di Sabbiuno, 11/D-E
40011 Anzola dell'Emilia (BO)
ITALY
T+39 051 64 25 811
F +39 051 73 39 04
sales@transtecno.com
www.transtecno.com

HANGZHOU TRANSTECNO POWER TRANSMISSIONS CO LTD
No.4 Xiuyan Road Fengdu Industry Zone
Pingyao Town Yuhang District
Hangzhou City, Zhejiang Province
311115 – CHINA
T +86 571 86 92 02 60
F +86 571 86 92 18 10
info-china@transtecno.com
www.transtecno.cn

CATACALU0118

TRANSTECNO U.S.A. LLC
5440 S.W. 156th Place Miami,
FL 33185 - USA
Tel: +1 (305) 220-4423
Fax: +1 (305) 220-5945
usaoffice@transtecno.com

TRANSTECNO B.V.
Ind. terrein Wieken/Vinkenhoef
De Stuwdam,43
3815 KM Amersfoort - NETHERLANDS
Tel: +31(0) 33 45 19 505
Fax: +31(0) 33 45 19 506
info@transtecno.nl
www.transtecno.nl

SALES OFFICE INDIA
A/10, Anagha, S.N. Road, Mulund (W) Mumbai
400080 - INDIA
Tel: +91 9820614698
Fax-Italy: +39 051 733 904
indiaoffice@transtecno.com

SALES OFFICE BRAZIL
Rua Dr. Freire Alemão 155 / 402 - CEP. 90450-060
Auxiliadora Porto Alegre RS - BRAZIL
Tel: +55 51 3251 5447
Fax: +55 51 3251 5447
Mobile: +55 51 811 45 962
braziloffice@transtecno.com
www.transtecno.com.br

TRANSTECNO IBÉRICA
THE MODULAR GEARMOTOR, S.A.
C/Enginy, 2 Nave 6 - 08850 Gavà (Barcelona) - SPAIN
Tel: +34 931 598 950
info@transtecno.es
www.transtecno.es

SALES OFFICE SOUTH KOREA
D-304 Songdo BRC Smart Valley 30, Songdomirae-ro,
Yeonsu-gu, Incheon, 406-840 - KOREA
Tel: +82 70 8288 2107
Fax: +82 32 815 2107
Mobile: +82 10 5094 2107
koreaoffice@transtecno.com

SALES OFFICE FRANCE
12 Impasse des Mûriers
38300 Ruy - FRANCE
Tel: +33 (0) 6 85 12 09 87
Fax-Italy: +39 051 733 904
franceoffice@transtecno.com
www.transtecno.fr

SALES OFFICE OCEANIA
44 Northview drive, Sunshine west 3020
Victoria - AUSTRALIA
Ph +61 03 9312 4722
Fax +61 03 9312 4714
Mobile: +61 0438060997
oceaniaoffice@transtecno.com
www.transtecno.com.au

TRANSTECNO®
the modular gearmotor

www.transtecno.com

designed by Procedi srl