TRANSTECNO®
the modular gearmotor

CMB

CMB

CMB Alu

Motoriduttori ad assi ortogonali
Helical bevel gearmotors

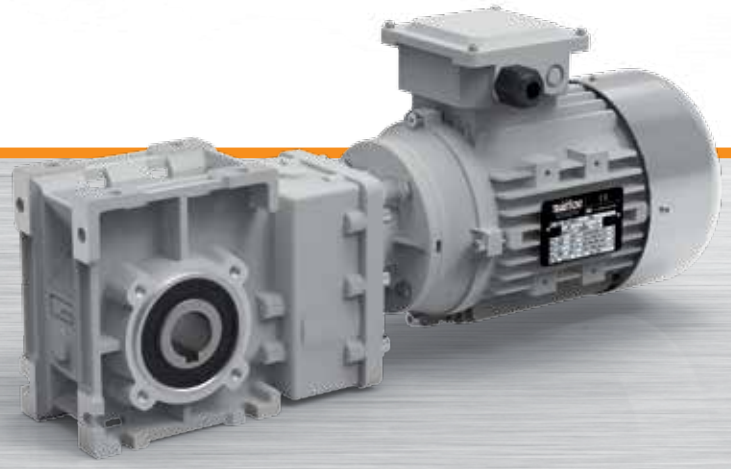

TRANSTECNO · GENUINE · PRODUCTS

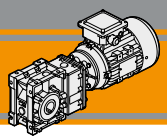

ENERGY SAVING

Indice	*Index*	Pag. *Page*
Caratteristiche tecniche	*Technical features*	**C2**
Designazione	*Classification*	**C2**
Sensi di rotazione	*Direction of rotation*	**C3**
Simbologia	*Symbols*	**C3**
Lubrificazione	*Lubrication*	**C4**
Carichi radiali	*Radial loads*	**C4**
Dati tecnici	*Technical data*	**C5**
Dimensioni	*Dimensions*	**C12**
Accessori	*Accessories*	**C16**

Questa sezione annulla e sostituisce ogni precedente edizione o revisione. Qualora questa sezione non Vi sia giunta in distribuzione controllata, l'aggiornamento dei dati ivi contenuto non è assicurato. **In tal caso la versione più aggiornata è disponibile sul nostro sito internet www.transtecno.com**

This section replaces any previous edition and revision. If you obtained this catalogue other than through controlled distribution channels, the most up to date content is not guaranteed. ***In this case the latest version is available on our web site www.transtecno.com***

Caratteristiche tecniche

I motoriduttori ad assi ortogonali della serie CMB sono caratterizzati da un elevato grado di modularità: sono stati realizzati con una carcassa completamente intercambiabile con quella dei riduttori a vite senza fine della serie CM.
Sono pertanto configurabili secondo le esigenze dell'applicazione con flangia di uscita, albero di uscita, braccio di reazione.

Caratteristiche comuni a tutta la serie:
- Carcassa in alluminio.
- Ingranaggi cilindrici a denti elicoidali, induriti e rettificati.
- Lubrificazione permanente con olio sintetico.

Technical features

The high degree of modularity of CMB helical bevel gearmotors allows it to be completely interchangeable with CM wormgearboxes.

It is possible to set up the version required using output flanges, output shafts and optional torque arms.

Common features of all CMB range are:
- *Die-cast aluminium housing.*
- *Ground-hardened helical gears.*
- *Permanent synthetic oil long-life lubrication.*

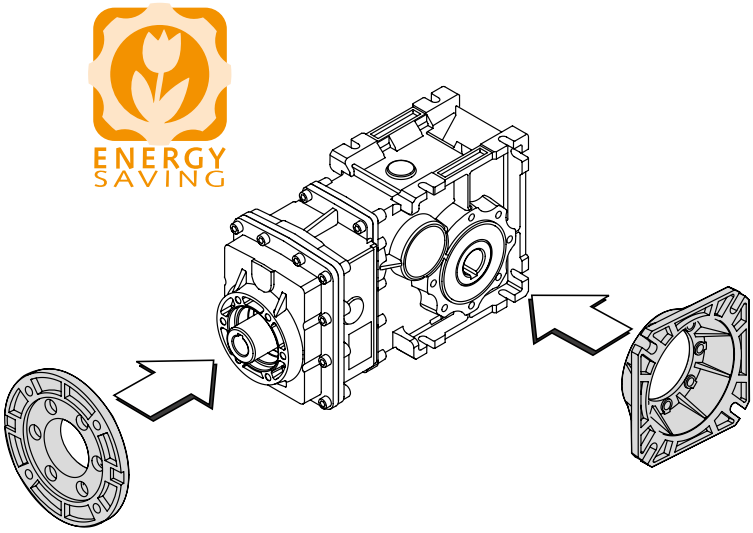

Designazione

Classification

RIDUTTORE / *GEARBOX*

CMB	63	3	U	9.81	D25	90	B5	SZDX	BRSX	90
Tipo *Type*	Grandezza *Size*	Stadi *Stages*	Versione *Version*	Rapporto *Ratio*	Albero cavo uscita *Hollow output shaft*	IEC	Forma costruttiva *Version*	Albero di uscita *Output shaft*	Braccio di reazione *Torque arm*	Angolo *Angle*
CMB	**40** **50** **63** **90**	**2** **3**	**U** **FD** **FS** **FBD** **FBS** **FLD** **FLS**	vedi tabelle *see tables*	vedi tabelle *see tables*	**56..** **—** **90..**	**B5** **B14**	**SZDX** **SZSX** **DZ**	**BRDX** **BRSX**	**0°** **90°** **180°** **270°**

RIDUTTORE / *GEARBOX*

CMBIS	63	3	U	9.81	D25	SZDX	BRSX	90
Tipo *Type*	Grandezza *Size*	Stadi *Stages*	Versione *Version*	Rapporto *Ratio*	Albero cavo uscita *Hollow output shaft*	Albero di uscita *Output shaft*	Braccio di reazione *Torque arm*	Angolo *Angle*
CMBIS	**40** **50** **63** **90**	**2** **3**	**U** **FD** **FS** **FBD** **FBS** **FLD** **FLS**	vedi tabelle *see tables*	vedi tabelle *see tables*	**SZDX** **SZSX** **DZ**	**BRDX** **BRSX**	**0°** **90°** **180°** **270°**

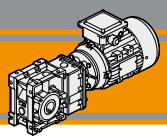

Designazione / *Classification*

Versione Riduttore
Gearbox Version

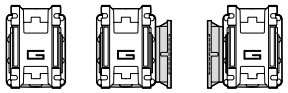

U | FD FLD FBD | FS FLS FBS

Albero di uscita
Output shaft

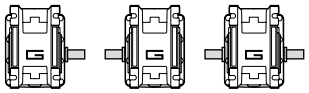

SZDX | SZSX | DZ

Braccio di reazione
Torque arm

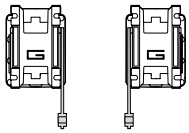

BRDX | BRSX

Angolo
Angle

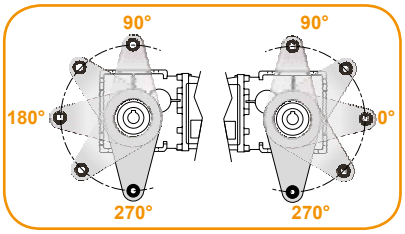

MOTORE / *MOTOR*					
1.5kW	**4p**	**3ph**	**230/400V**	**50Hz**	**T1**
Potenza *Power*	Poli *Poles*	Fasi *Phases*	Tensione *Voltage*	Frequenza *Frequency*	Pos. morsettiera *Terminal box pos.*
vedi tabelle *see tables*	**2p** **4p** **6p** **8p**	**1ph** **3ph**	**230V** **230/400V**	**50Hz** **60Hz**	**T1** (Std) **T4** **T2** **T3**

Sensi di rotazione / *Direction of rotation*

CMB...2
CMBIS..2

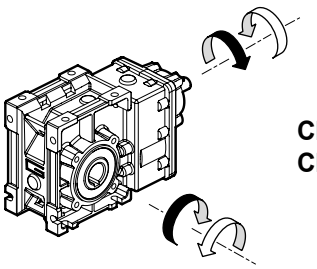

CMB...3
CMBIS..3

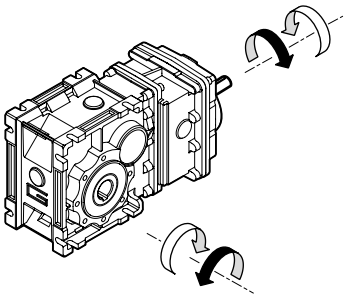

Simbologia / *Symbols*

n_1	[min^{-1}]	Velocità in ingresso / *Input speed*
n_2	[min^{-1}]	Velocità in uscita / *Output speed*
i		Rapporto di riduzione / *Ratio*
P_1	[kW]	Potenza in entrata / *Input power*
M_2	[Nm]	Coppia nominale in uscita in funzione di P_1 / *Output torque referred to P_1*
Pn_1	[kW]	Potenza nominale in entrata / *Nominal input power*
Mn_2	[Nm]	Coppia nominale in uscita in funzione di Pn_1 / *Nominal output torque referred to Pn_1*
sf		Fattore di servizio / *Service factor*
R_2	[N]	Carico radiale ammissibile in uscita / *Permitted output radial load*
A_2	[N]	Carico assiale ammissibile in uscita / *Permitted output axial load*

Lubrificazione

Tutti i motoriduttori CMB sono forniti completi di lubrificante sintetico viscosità 320, pertanto possono essere installati in qualunque posizione di montaggio e non necessitano di manutenzione.

Lubrication

Permanent synthetic oil long-life lubrication (viscosity grade 320) makes it possible to use CMB gearmotors in all mounting positions; for this reason they can be installed in any assembly position and do not require maintenance.

Carichi radiali

Radial loads

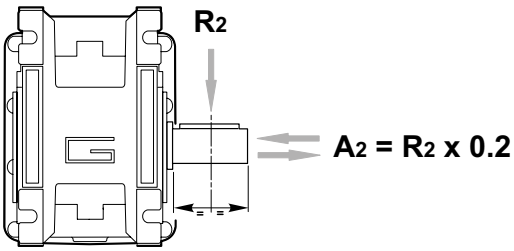

n_2 [min^{-1}]	R_2 [N]			
	CMB 402	CMB 502	CMB 633	CMB 903
400	905	1116	1835	2682
300	996	1228	2020	2952
200	1141	1406	2312	3379
170	1204	1484	2441	3567
140	1414	1743	2604	3806
100	1582	1949	2913	4686
90	1638	2019	3321	4853
60	2047	2490	3801	5556
40	2524	3029	4492	6614
30	2778	3334	5159	7540
20	3180	3816	5906	8631
15	3500	4200	6500	9500
10	3500	4200	6500	9500

Quando il carico radiale risultante non è applicato sulla mezzeria dell'albero occorre calcolare quello effettivo con la seguente formula

When the resulting radial load is not applied on the centre line of the shaft it is necessary to calculate the effective load with the following formula:

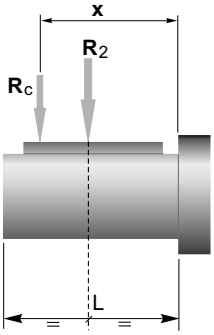

	CMB 402	CMB 502	CMB 633	CMB 903
a	86	104	118	157
b	66	79	93	117
R_{2MAX}	3500	4200	6500	9500

$$R_c = \frac{R_2 \cdot a}{(b+x)} \leq R_{2MAX}$$

$$R \leq R_c$$

a, b = valori riportati nella tabella
a, b = values given in the table

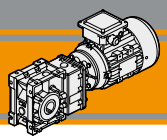

Dati tecnici — n_1 1400 min^{-1} — *Technical data*

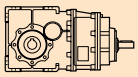

	n_2 [min^{-1}]	Mn_2 [Nm]	Pn_1 [kW]	i	IEC Motori applicabili / *IEC Motor adapters*			
CMBIS 402					**56 B5/B14**	**63 B5/B14**	**71 B5/B14**	
	227	40	1.0	6.18				
	187	40	0.83	7.49				
	152	40	0.68	9.2				
	118	45	0.59	11.83				
	112	45	0.56	12.48				
	94.4	45	0.47	14.83				
	79.4	45	0.40	17.63				
	75.3	55	0.46	18.6				
	62.7	55	0.38	22.33				
	58.6	55	0.36	23.91				
	48.5	65	0.35	28.89				
	45.4	65	0.33	30.84				
	41.7	65	0.30	33.57				
	39.3	65	0.28	35.63				
	32.7	65	0.24	42.75				
	25.3	65	0.18	55.31			*	
	23.7	65	0.17	59.06			*	
	21.8	65	0.16	64.29			*	
	19.3	65	0.14	72.50			*	

CMBIS 502					**56 B5/B14**	**63 B5/B14**	**71 B5/B14**	**80 B5/B14**
	227	70	1.8	6.18				
	187	70	1.5	7.49				
	152	70	1.2	9.20				
	118	90	1.2	11.83				
	112	90	1.1	12.48				
	94.4	90	0.95	14.83				
	79.4	90	0.80	17.63				
	75.3	110	0.92	18.60				
	62.7	110	0.77	22.33				
	58.6	110	0.72	23.91				
	48.5	125	0.67	28.89				
	45.4	125	0.63	30.84				
	41.7	125	0.58	33.57				
	39.3	125	0.55	35.63				
	32.7	125	0.46	42.75				*
	25.3	125	0.35	55.31				*
	23.7	125	0.33	59.06				*
	21.8	125	0.30	64.29				*
	19.3	125	0.27	72.50				*

N.B.
Le aree evidenziate indicano l'applicabilità della corrispondente grandezza motore.

N.B.
Highlighted areas indicate motor inputs available on each size of unit.

*** =** Il fattore di servizio (**sf**) deve essere scelto in funzione dell'applicazione: si prega di contattare il nostro Servizio Tecnico.

Prima di eseguire la scelta del motoriduttore riferirsi alle prestazioni elencate nelle tabelle dalla pag. C8 alla pag. C11

**** =*** *The service factor (**sf**) has to be selected depending on application: please contact our Technical Department.*

Before selecting any gearbox, please read the performance values shown in the tables on page C8 to C11.

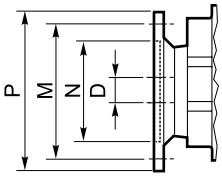

Dimensioni IEC / *IEC Dimensions*								
	56 B5	**56 B14**	**63 B5**	**63 B14**	**71 B5**	**71 B14**	**80 B5**	**80 B14**
N	80	50	95	60	110	70	130	80
M	100	65	115	75	130	85	165	100
P	120	80	140	90	160	105	200	120
D	9		11		14		19	

Dati tecnici — n_1 1400 min^{-1} — *Technical data*

	n_2 [min^{-1}]	Mn_2 [Nm]	Pn_1 [kW]	i	IEC Motori applicabili / *IEC Motor adapters*			
CMBIS 633					**63 B5**	**71 B5/B14**	**80 B5/B14**	**90 B5/B14**
	213	150	3.6	6.58				
	175	150	2.9	7.99				
	143	150	2.4	9.81				
	134	150	2.2	10.44				
	112	150	1.9	12.53				
	105	150	1.8	13.31				
	88.6	170	1.7	15.81				
	78.8	220	1.9	17.77				
	64.9	220	1.6	21.56				
	52.9	220	1.3	26.48				
	49.7	220	1.2	28.17				
	41.4	220	1.0	33.81				
	39.0	220	0.96	35.92				
	36.0	250	1.00	38.88				
	29.7	250	0.83	47.16				*
	24.2	250	0.67	57.93				*
	22.7	250	0.63	61.63				*
	18.9	250	0.53	73.96				*
	17.8	250	0.50	78.58				*
	15.0	250	0.42	93.33			*	*
	10.0	250	0.28	140.52			*	*
	7.7	250	0.21	181.81			*	*
	6.6	250	0.18	211.31		*	*	*
	5.9	250	0.16	238.31		*	*	*

N.B.
Le aree evidenziate indicano l'applicabilità della corrispondente grandezza motore.

N.B.
Highlighted areas indicate motor inputs available on each size of unit.

*** =** Il fattore di servizio (**sf**) deve essere scelto in funzione dell'applicazione: si prega di contattare il nostro Servizio Tecnico.

Prima di eseguire la scelta del motoriduttore riferirsi alle prestazioni elencate nelle tabelle dalla pag. C8 alla pag. C11

**** =*** *The service factor (**sf**) has to be selected depending on application: please contact our Technical Department.*

Before selecting any gearbox, please read the performance values shown in the tables on page C8 to C11.

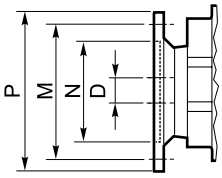

Dimensioni IEC / *IEC Dimensions*							
	63 B5	**71 B5**	**71 B14**	**80 B5**	**80 B14**	**90 B5**	**90 B14**
N	95	110	70	130	80	130	95
M	115	130	85	165	100	165	115
P	140	160	105	200	120	200	140
D	11	14		19		24	

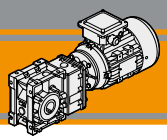

Dati tecnici — n_1 1400 min^{-1} — *Technical data*

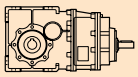

	n_2 [min^{-1}]	Mn_2 [Nm]	Pn_1 [kW]	i	IEC Motori applicabili / *IEC Motor adapters*			
CMBIS 903					**71 B5**	**80 B5/B14**	**90 B5/B14**	**100112 B5/B14**
	211	280	6.57	6.65	**B**			
	175	280	5.46	8.00	**B**			
	144	280	4.48	9.74	**B**			
	125	280	3.90	11.21	**B**			
	99.3	300	3.32	14.09	**B**			
	78.0	450	3.91	17.95	**B**			
	64.8	450	3.25	21.60	**B**			
	53.2	450	2.67	26.30	**B**			
	46.3	450	2.32	30.25	**B**			
	35.7	500	1.99	39.26	**B**			
	29.6	500	1.65	47.25	**B**			*
	24.3	500	1.36	57.52	**B**			*
	21.2	500	1.18	66.17	**B**			*
	16.8	500	0.94	83.20	**B**			*
	13.0	500	0.72	108.09	**B**		*	*
	10.6	500	0.59	132.23	**B**		*	*
	9.5	500	0.53	147.92	**B**		*	*
	8.4	500	0.47	167.09	**B**		*	*
	7.3	500	0.41	191.06	**B**	*	*	*
	6.3	500	0.35	221.88	**B**	*	*	*
	5.3	500	0.30	262.96	**B**	*	*	*

N.B.
Le aree evidenziate indicano l'applicabilità della corrispondente grandezza motore.
B = Boccola di riduzione in acciaio.

*** =** Il fattore di servizio (**sf**) deve essere scelto in funzione dell'applicazione: si prega di contattare il nostro Servizio Tecnico.

Prima di eseguire la scelta del motoriduttore riferirsi alle prestazioni elencate nelle tabelle dalla pag. C8 alla pag. C11

N.B.
Highlighted areas indicate motor inputs available on each size of unit.
***B** = Metal shaft sleeve.*

**** =** The service factor (**sf**) has to be selected depending on application: please contact our Technical Department.*

Before selecting any gearbox, please read the performance values shown in the tables on page C8 to C11.

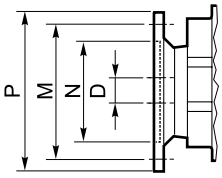

Dimensioni IEC / *IEC Dimensions*							
	71 B5	**80 B5**	**80 B14**	**90 B5**	**90 B14**	**100/112 B5**	**100/112 B14**
N	110	130	80	130	95	180	110
M	130	165	100	165	115	215	130
P	160	200	120	200	140	250	160
D	14	19		24		28	

Dati tecnici

Technical data

P_1 [kW]	n_2 [min^{-1}]	M_2 [Nm]	sf	i		IEC
0.06						
56A4 (1400 min^{-1})	**39.3**	14	4.7	35.63	**CMB402**	**B5/B14**
	32.7	16	4.0	42.75		**B5/B14**
	25.3	21	3.1	55.31		**B5/B14**
	23.7	23	2.9	59.06		**B5/B14**
	21.8	25	2.6	64.29		**B5/B14**
	19.3	28	2.3	72.50		**B5/B14**
0.09						
56B4 (1400 min^{-1})	**48.5**	17	3.9	28.89	**CMB402**	**B5/B14**
	45.4	18	3.7	30.84		**B5/B14**
	41.7	19	3.4	33.57		**B5/B14**
	39.3	21	3.2	35.63		**B5/B14**
	32.7	25	2.6	42.75		**B5/B14**
	25.3	32	2.0	55.31		**B5/B14**
	23.7	34	1.9	59.06		**B5/B14**
	21.8	37	1.8	64.29		**B5/B14**
	19.3	42	1.6	72.50		**B5/B14**
0.12						
63A4 (1400 min^{-1})	**227**	5	8.4	6.18	**CMB402**	**B5/B14**
	187	6	6.9	7.49		**B5/B14**
	152	7	5.6	9.20		**B5/B14**
	118	9	4.9	11.83		**B5/B14**
	112	10	4.7	12.48		**B5/B14**
	94.4	11	3.9	14.83		**B5/B14**
	79.4	14	3.3	17.63		**B5/B14**
	75.3	14	3.8	18.60		**B5/B14**
	62.7	17	3.2	22.33		**B5/B14**
	58.6	18	3.0	23.91		**B5/B14**
	48.5	22	2.9	28.89		**B5/B14**
	45.4	24	2.7	30.84		**B5/B14**
	41.7	26	2.5	33.57		**B5/B14**
	39.3	27	2.4	35.63		**B5/B14**
	32.7	33	2.0	42.75		**B5/B14**
	25.3	43	1.5	55.31		**B5/B14**
	23.7	45	1.4	59.06		**B5/B14**
	21.8	49	1.3	64.29		**B5/B14**
	19.3	56	1.2	72.50		**B5/B14**
	32.7	33	3.8	42.75	**CMB502**	**B5/B14**
	25.3	43	2.9	55.31		**B5/B14**
	23.7	45	2.8	59.06		**B5/B14**
	21.8	49	2.5	64.29		**B5/B14**
	19.3	56	2.2	72.50		**B5/B14**
	18.9	57	4.4	73.96	**CMB633**	**B5**
	17.8	60	4.1	78.58		**B5**
	15.0	72	3.5	93.33		**B5**
	10.0	108	2.3	140.52		**B5**
	7.7	140	1.8	181.81		**B5**
	6.6	163	1.5	211.31		**B5**
	5.9	183	1.4	238.31		**B5**

P_1 [kW]	n_2 [min^{-1}]	M_2 [Nm]	sf	i		IEC
0.18						
63B4 (1400 min^{-1})	**227**	7	5.6	6.18	**CMB402**	**B5/B14**
	187	9	4.6	7.49		**B5/B14**
	152	11	3.8	9.20		**B5/B14**
	118	14	3.3	11.83		**B5/B14**
	112	14	3.1	12.48		**B5/B14**
	94.4	17	2.6	14.83		**B5/B14**
	79.4	20	2.2	17.63		**B5/B14**
	75.3	21	2.6	18.60		**B5/B14**
	62.7	26	2.1	22.33		**B5/B14**
	58.6	28	2.0	23.91		**B5/B14**
	48.5	33	1.9	28.89		**B5/B14**
	45.4	36	1.8	30.84		**B5/B14**
	41.7	39	1.7	33.57		**B5/B14**
	39.3	41	1.6	35.63		**B5/B14**
	32.7	49	1.3	42.75		**B5/B14**
	25.3	64	1.0	55.31		**B5/B14**
	23.7	68	0.95	59.06		**B5/B14**
	21.8	74	0.88	64.29		**B5/B14**
	19.3	84	0.8	72.50		**B5/B14**
	45.4	36	3.5	30.84	**CMB502**	**B5/B14**
	41.7	39	3.2	33.57		**B5/B14**
	39.3	41	3.0	35.63		**B5/B14**
	32.7	49	2.5	42.75		**B5/B14**
	25.3	64	2.0	55.31		**B5/B14**
	23.7	68	1.8	59.06		**B5/B14**
	21.8	74	1.7	64.29		**B5/B14**
	19.3	84	1.5	72.50		**B5/B14**
	24.2	67	3.7	57.93	**CMB633**	**B5**
	22.7	71	3.5	61.63		**B5**
	18.9	85	2.9	73.96		**B5**
	17.8	91	2.8	78.58		**B5**
	15.0	108	2.3	93.33		**B5**
	10.0	162	1.5	140.52		**B5**
	7.7	210	1.2	181.81		**B5**
	6.6	244	1.0	211.31		**B5**
	5.9	275	0.9	238.31		**B5**

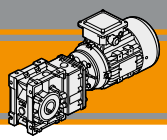

Dati tecnici

Technical data

P_1 [kW]	n_2 [min^{-1}]	M_2 [Nm]	sf	i		IEC
0.25						
71A4 (1400 min^{-1})	**227**	10	4.0	6.18	**CMB402**	**B5/B14**
	187	12	3.3	7.49		**B5/B14**
	152	15	2.7	9.20		**B5/B14**
	118	19	2.4	11.83		**B5/B14**
	112	20	2.2	12.48		**B5/B14**
	94.4	24	1.9	14.83		**B5/B14**
	79.4	28	1.6	17.63		**B5/B14**
	75.3	30	1.8	18.60		**B5/B14**
	62.7	36	1.5	22.33		**B5/B14**
	58.6	38	1.4	23.91		**B5/B14**
	48.5	46	1.4	28.89		**B5/B14**
	45.4	49	1.3	30.84		**B5/B14**
	41.7	54	1.2	33.57		**B5/B14**
	39.3	57	1.1	35.63		**B5/B14**
	32.7	69	0.9	42.75		**B5/B14**
	227	10	7.1	6.18	**CMB502**	**B5/B14**
	187	12	5.8	7.49		**B5/B14**
	152	15	4.7	9.20		**B5/B14**
	118	19	4.7	11.83		**B5/B14**
	112	20	4.5	12.48		**B5/B14**
	94.4	24	3.8	14.83		**B5/B14**
	79.4	28	3.2	17.63		**B5/B14**
	75.3	30	3.7	18.60		**B5/B14**
	62.7	36	3.1	22.33		**B5/B14**
	58.6	38	2.9	23.91		**B5/B14**
	48.5	46	2.7	28.89		**B5/B14**
	45.4	49	2.5	30.84		**B5/B14**
	41.7	54	2.3	33.57		**B5/B14**
	39.3	57	2.2	35.63		**B5/B14**
	32.7	69	1.8	42.75		**B5/B14**
	25.3	89	1.4	55.31		**B5/B14**
	23.7	95	1.3	59.06		**B5/B14**
	21.8	103	1.2	64.29		**B5/B14**
	19.3	116	1.1	72.50		**B5/B14**
	41.4	54	4.1	33.81	**CMB633**	**B5/B14**
	39.0	58	3.8	35.92		**B5/B14**
	36.0	62	4.0	38.88		**B5/B14**
	29.7	76	3.3	47.16		**B5/B14**
	24.2	93	2.7	57.93		**B5/B14**
	22.7	99	2.5	61.63		**B5/B14**
	18.9	119	2.1	73.96		**B5/B14**
	17.8	126	2.0	78.58		**B5/B14**
	15.0	150	1.7	93.33		**B5/B14**
	10.0	225	1.1	140.52		**B5/B14**
	7.7	291	0.9	181.81		**B5/B14**
	24.3	92	5.4	57.52	**CMB903**	**B5**
	21.2	106	4.7	66.17		**B5**
	16.8	133	3.7	83.20		**B5**
	13.0	173	2.9	108.09		**B5**
	10.6	212	2.4	132.23		**B5**
	9.5	237	2.1	147.92		**B5**
	8.4	268	1.9	167.09		**B5**
	7.3	306	1.6	191.06		**B5**
	6.3	356	1.4	221.88		**B5**
	5.3	422	1.2	262.96		**B5**

P_1 [kW]	n_2 [min^{-1}]	M_2 [Nm]	sf	i		IEC
0.37						
71B4 (1400 min^{-1})	**227**	15	2.7	6.18	**CMB402**	**B5/B14**
	187	18	2.3	7.49		**B5/B14**
	152	22	1.8	9.20		**B5/B14**
	118	28	1.6	11.83		**B5/B14**
	112	30	1.5	12.48		**B5/B14**
	94.4	35	1.3	14.83		**B5/B14**
	79.4	42	1.1	17.63		**B5/B14**
	75.3	44	1.2	18.60		**B5/B14**
	62.7	53	1.0	22.33		**B5/B14**
	58.6	57	1.0	23.91		**B5/B14**
	48.5	69	0.9	28.89		**B5/B14**
	45.4	73	0.9	30.84		**B5/B14**
	227	15	4.8	6.18	**CMB502**	**B5/B14**
	187	18	3.9	7.49		**B5/B14**
	152	22	3.2	9.20		**B5/B14**
	118	28	3.2	11.83		**B5/B14**
	112	30	3.0	12.48		**B5/B14**
	94.4	35	2.6	14.83		**B5/B14**
	79.4	42	2.2	17.63		**B5/B14**
	75.3	44	2.5	18.60		**B5/B14**
	62.7	53	2.1	22.33		**B5/B14**
	58.6	57	1.9	23.91		**B5/B14**
	48.5	69	1.8	28.89		**B5/B14**
	45.4	73	1.7	30.84		**B5/B14**
	41.7	80	1.6	33.57		**B5/B14**
	39.3	85	1.5	35.63		**B5/B14**
	32.7	101	1.2	42.75		**B5/B14**
	25.3	131	1.0	55.31		**B5/B14**
	23.7	140	0.9	59.06		**B5/B14**
	64.9	51	4.3	21.56	**CMB633**	**B5/B14**
	52.9	63	3.5	26.48		**B5/B14**
	49.7	67	3.3	28.17		**B5/B14**
	41.4	80	2.7	33.81		**B5/B14**
	39.0	85	2.6	35.92		**B5/B14**
	36.0	92	2.7	38.88		**B5/B14**
	29.7	112	2.2	47.16		**B5/B14**
	24.2	137	1.8	57.93		**B5/B14**
	22.7	146	1.7	61.63		**B5/B14**
	18.9	175	1.4	73.96		**B5/B14**
	17.8	186	1.3	78.58		**B5/B14**
	15.0	221	1.1	93.33		**B5/B14**
	29.6	112	4.5	47.25	**CMB903**	**B5**
	24.3	136	3.7	57.52		**B5**
	21.2	157	3.2	66.17		**B5**
	16.8	197	2.5	83.20		**B5**
	13.0	256	1.9	108.09		**B5**
	10.6	314	1.6	132.23		**B5**
	9.5	351	1.4	147.92		**B5**
	8.4	396	1.3	167.09		**B5**
	7.3	453	1.1	191.06		**B5**
	6.3	526	0.9	221.88		**B5**
	5.3	624	0.8	262.96		**B5**

Dati tecnici

Technical data

P_1 [kW]	n_2 [min^{-1}]	M_2 [Nm]	sf	i		IEC
0.55						
80A4 (1400 min^{-1})	**227**	22	3.2	6.18	**CMB502**	**B5/B14**
	187	26	2.6	7.49		**B5/B14**
	152	32	2.2	9.20		**B5/B14**
	118	42	2.2	11.83		**B5/B14**
	112	44	2.0	12.48		**B5/B14**
	94.4	52	1.7	14.83		**B5/B14**
	79.4	62	1.4	17.63		**B5/B14**
	75.3	66	1.7	18.60		**B5/B14**
	62.7	79	1.4	22.33		**B5/B14**
	58.6	84	1.3	23.91		**B5/B14**
	48.5	102	1.2	28.89		**B5/B14**
	45.4	109	1.1	30.84		**B5/B14**
	41.7	118	1.1	33.57		**B5/B14**
	39.3	126	1.0	35.63		**B5/B14**
	213	23	6.5	6.58	**CMB633**	**B5/B14**
	175	28	5.3	7.99		**B5/B14**
	143	35	4.3	9.81		**B5/B14**
	134	37	4.1	10.44		**B5/B14**
	112	44	3.4	12.53		**B5/B14**
	105	47	3.2	13.31		**B5/B14**
	88.6	56	3.0	15.81		**B5/B14**
	78.8	63	3.5	17.77		**B5/B14**
	64.9	76	2.9	21.56		**B5/B14**
	52.9	93	2.4	26.48		**B5/B14**
	49.7	99	2.2	28.17		**B5/B14**
	41.4	119	1.8	33.81		**B5/B14**
	39.0	127	1.7	35.92		**B5/B14**
	36.0	137	1.8	38.88		**B5/B14**
	29.7	166	1.5	47.16		**B5/B14**
	24.2	204	1.2	57.93		**B5/B14**
	22.7	217	1.2	61.63		**B5/B14**
	18.9	261	1.0	73.96		**B5/B14**
	17.8	277	0.9	78.58		**B5/B14**
	46.3	107	4.2	30.25	**CMB903**	**B5/B14**
	35.7	138	3.6	39.26		**B5/B14**
	29.6	167	3.0	47.25		**B5/B14**
	24.3	203	2.5	57.52		**B5/B14**
	21.2	233	2.1	66.17		**B5/B14**
	16.8	293	1.7	83.20		**B5/B14**
	13.0	381	1.3	108.09		**B5/B14**
	10.6	466	1.1	132.23		**B5/B14**
	9.5	522	1.0	147.92		**B5/B14**
	8.4	589	0.8	167.09		**B5/B14**

P_1 [kW]	n_2 [min^{-1}]	M_2 [Nm]	sf	i		IEC
0.75						
80B4 (1400 min^{-1})	**227**	30	2.4	6.18	**CMB502**	**B5/B14**
	187	36	1.9	7.49		**B5/B14**
	152	44	1.6	9.20		**B5/B14**
	118	57	1.6	11.83		**B5/B14**
	112	60	1.5	12.48		**B5/B14**
	94.4	71	1.3	14.83		**B5/B14**
	79.4	85	1.1	17.63		**B5/B14**
	75.3	89	1.2	18.60		**B5/B14**
	62.7	107	1.0	22.33		**B5/B14**
	58.6	115	1.0	23.91		**B5/B14**
	48.5	139	0.9	28.89		**B5/B14**
	213	32	4.7	6.58	**CMB633**	**B5/B14**
	175	38	3.9	7.99		**B5/B14**
	143	47	3.2	9.81		**B5/B14**
	134	50	3.0	10.44		**B5/B14**
	112	60	2.5	12.53		**B5/B14**
	105.2	64	2.3	13.31		**B5/B14**
	88.6	76	2.2	15.81		**B5/B14**
	78.8	85	2.6	17.77		**B5/B14**
	64.9	104	2.1	21.56		**B5/B14**
	52.9	127	1.7	26.48		**B5/B14**
	49.7	135	1.6	28.17		**B5/B14**
	41.4	163	1.4	33.81		**B5/B14**
	39.0	173	1.3	35.92		**B5/B14**
	36.0	187	1.3	38.88		**B5/B14**
	29.7	227	1.1	47.16		**B5/B14**
	24.2	279	0.9	57.93		**B5/B14**
	22.7	296	0.8	61.63		**B5/B14**
	64.8	104	4.3	21.60	**CMB903**	**B5/B14**
	53.2	126	3.6	26.30		**B5/B14**
	46.3	145	3.1	30.25		**B5/B14**
	35.7	189	2.6	39.26		**B5/B14**
	29.6	227	2.2	47.25		**B5/B14**
	24.3	277	1.8	57.52		**B5/B14**
	21.2	318	1.6	66.17		**B5/B14**
	16.8	400	1.2	83.20		**B5/B14**
	13.0	519.8	1.0	108.09		**B5**

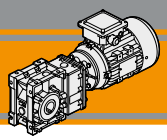

Dati tecnici

Technical data

P_1 [kW]	n_2 [min^{-1}]	M_2 [Nm]	sf	i		IEC
1.1						
90S4 (1400 min^{-1})	**213**	46	3.2	6.58	**CMB633**	**B5/B14**
	175	56	2.7	7.99		**B5/B14**
	143	69	2.2	9.81		**B5/B14**
	134	74	2.0	10.44		**B5/B14**
	112	88	1.7	12.53		**B5/B14**
	105	94	1.6	13.31		**B5/B14**
	88.6	112	1.5	15.81		**B5/B14**
	78.8	125	1.8	17.77		**B5/B14**
	64.9	152	1.4	21.56		**B5/B14**
	52.9	187	1.2	26.48		**B5/B14**
	49.7	199	1.1	28.17		**B5/B14**
	41.4	238	0.9	33.81		**B5/B14**
	39.0	253	0.9	35.92		**B5/B14**
	36.0	274	0.9	38.88		**B5/B14**
	211	47	6.0	6.65	**CMB903**	**B5/B14**
	175	56	5.0	8.00		**B5/B14**
	144	69	4.1	9.74		**B5/B14**
	125	79	3.5	11.21		**B5/B14**
	99.3	99	3.0	14.09		**B5/B14**
	78.0	127	3.6	17.95		**B5/B14**
	64.8	152	3.0	21.60		**B5/B14**
	53.2	185	2.4	26.30		**B5/B14**
	46.3	213	2.1	30.25		**B5/B14**
	35.7	277	1.8	39.26		**B5/B14**
	29.6	333	1.5	47.25		**B5/B14**
	24.3	406	1.2	57.52		**B5/B14**
	21.2	467	1.1	66.17		**B5/B14**
	16.8	587	0.9	83.20		**B5/B14**
1.5						
90L4 (1400 min^{-1})	**213**	63	2.4	6.58	**CMB633**	**B5/B14**
	175	77	2.0	7.99		**B5/B14**
	143	94	1.6	9.81		**B5/B14**
	134	100	1.5	10.44		**B5/B14**
	112	120	1.2	12.53		**B5/B14**
	105	128	1.2	13.31		**B5/B14**
	88.6	152	1.1	15.81		**B5/B14**
	78.8	171	1.3	17.77		**B5/B14**
	64.9	207	1.1	21.56		**B5/B14**
	52.9	255	0.9	26.48		**B5/B14**
	211	64	4.4	6.65	**CMB903**	**B5/B14**
	175	77	3.6	8.00		**B5/B14**
	144	94	3.0	9.74		**B5/B14**
	125	108	2.6	11.21		**B5/B14**
	99.3	136	2.2	14.09		**B5/B14**
	78.0	173	2.6	17.95		**B5/B14**
	64.8	208	2.2	21.60		**B5/B14**
	53.2	253	1.8	26.30		**B5/B14**
	46.3	291	1.5	30.25		**B5/B14**
	35.7	378	1.3	39.26		**B5/B14**
	29.6	454	1.1	47.25		**B5/B14**
	24.3	553	0.9	57.52		**B5/B14**

P_1 [kW]	n_2 [min^{-1}]	M_2 [Nm]	sf	i		IEC
1.85						
90LB4 (1400 min^{-1})	**213**	78	1.9	6.58	**CMB633**	**B5/B14**
	175	95	1.6	7.99		**B5/B14**
	143	116	1.3	9.81		**B5/B14**
	134	124	1.2	10.44		**B5/B14**
	112	149	1.0	12.53		**B5/B14**
	105	158	1.0	13.31		**B5/B14**
	88.6	188	0.9	15.81		**B5/B14**
	78.8	211	1.0	17.77		**B5/B14**
	211	79	3.5	6.65	**CMB903**	**B5/B14**
	175	95	2.9	8.00		**B5/B14**
	144	116	2.4	9.74		**B5/B14**
	125	133	2.1	11.21		**B5/B14**
	99.3	167	1.8	14.09		**B5/B14**
	78.0	213	2.1	17.95		**B5/B14**
	64.8	256	1.8	21.60		**B5/B14**
	53.2	312	1.4	26.30		**B5/B14**
	46.3	359	1.3	30.25		**B5/B14**
	35.7	466	1.1	39.26		**B5/B14**
	29.6	561	0.9	47.25		**B5/B14**
2.2						
100LA4 (1400 min^{-1})	**211**	94	3.0	6.65	**CMB903**	**B5/B14**
	175	113	2.5	8.00		**B5/B14**
	144	137	2.0	9.74		**B5/B14**
	125	158	1.8	11.21		**B5/B14**
	99.3	199	1.5	14.09		**B5/B14**
	78.0	253	1.8	17.95		**B5/B14**
	64.8	305	1.5	21.60		**B5/B14**
	53.2	371	1.2	26.30		**B5/B14**
	46.3	427	1.1	30.25		**B5/B14**
	35.7	554	0.9	39.26		**B5/B14**
3						
100LB4 (1400 min^{-1})	**211**	128	2.2	6.65	**CMB903**	**B5/B14**
	175	154	1.8	8.00		**B5/B14**
	144	187	1.5	9.74		**B5/B14**
	125	216	1.3	11.21		**B5/B14**
	99.3	271	1.1	14.09		**B5/B14**
	78.0	345	1.3	17.95		**B5/B14**
	64.8	416	1.1	21.60		**B5/B14**
	53.2	506	0.9	26.30		**B5/B14**
4						
112M4 (1400 min^{-1})	**211**	171	1.6	6.65	**CMB903**	**B5/B14**
	175	205	1.4	8.00		**B5/B14**
	144	250	1.1	9.74		**B5/B14**
	125	287	1.0	11.21		**B5/B14**
	99.3	361	0.8	14.09		**B5/B14**
	78.0	460	1.0	17.95		**B5/B14**

Dimensioni *Dimensions*

CMB 402.. - CMBIS 402..

CMB 402 U..

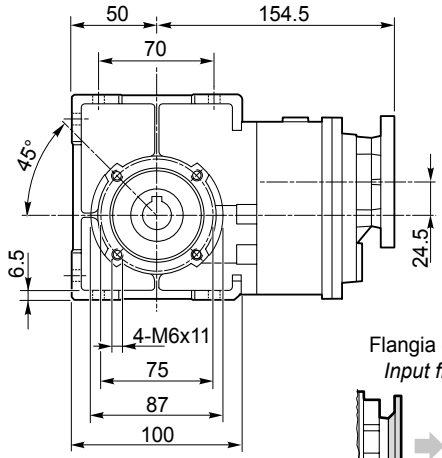

CMBIS 402 U..

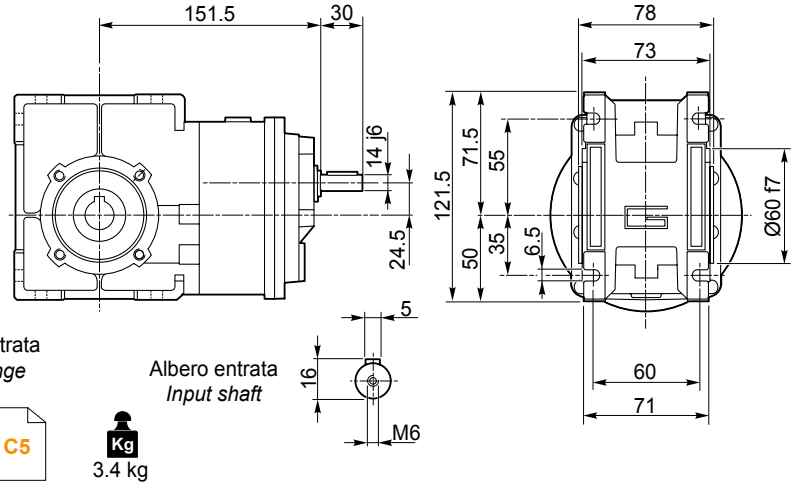

CMB 402 F..

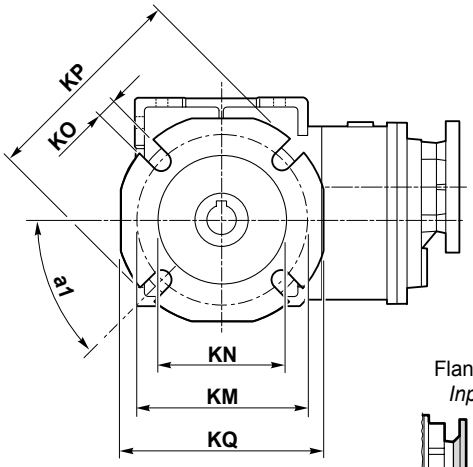

CMBIS 402 F..

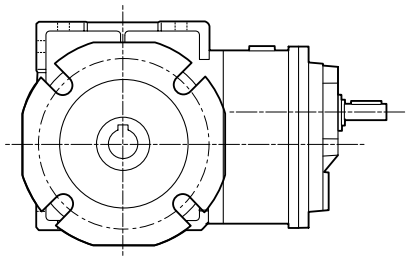

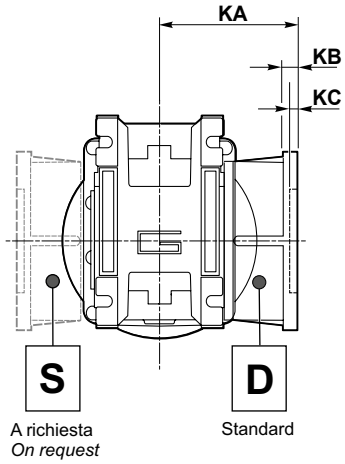

Versione **F** / ***F Version***										
CMB CMBIS	**a_1**	**KA**	**KB**	**KC**	**KM**	**KN** H8	**KO**	**KP**	**KQ**	**Flangia / *Flange*** Tipo / *Type*
402	45°	67	7.5	4.5	80-95	60	9	110	95	**F**
	45°	97	7.5	4.5	80-95	60	9	110	95	**FL**
	45°	80	8.5	5	115-125	95	9.5	140	112	**FB**

CMB 402.. D.. - CMBIS 402.. D..

Albero uscita cavo
Hollow output shaft

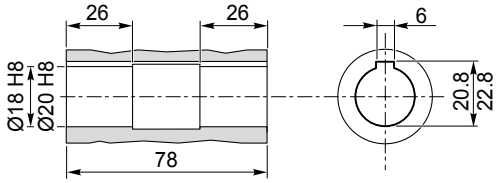

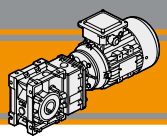

CMB 502.. - CMBIS 502..

CMB 502 U..

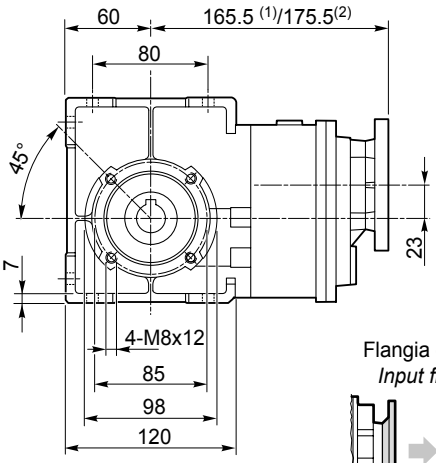

(1)IEC 56/63/71
(2)IEC 80

CMBIS 502 U..

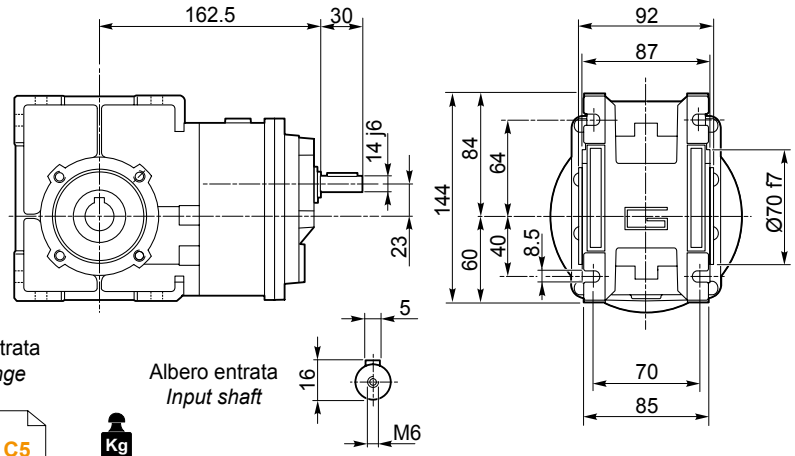

Flangia entrata
Input flange

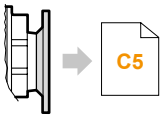

C5

Albero entrata
Input shaft

Kg
(1) 4.7 kg
(2) 5.0 kg

CMB 502 F..

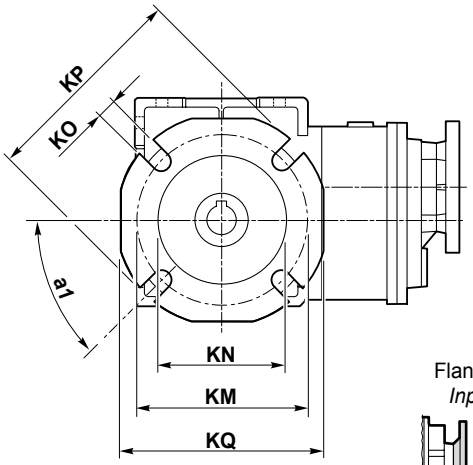

CMBIS 502 F..

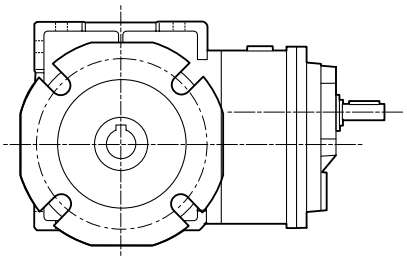

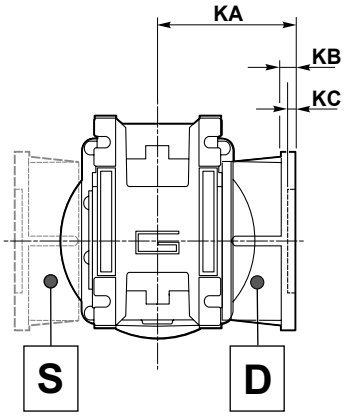

Flangia entrata
Input flange

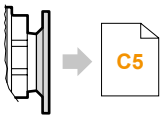

C5

Kg
4.8 kg

S
A richiesta
On request

D
Standard

Versione **F** / ***F Version***										
CMB CMBIS	**a_1**	**KA**	**KB**	**KC**	**KM**	**KN** H8	**KO**	**KP**	**KQ**	**Flangia / *Flange*** Tipo / *Type*
502	45°	90	9	5	90-110	70	11	125	110	**F**
	45°	120	9	5	90-110	70	11	125	110	**FL**
	45°	89	9	5	130-145	110	9.5	160	132	**FB**

CMB 502.. D.. - CMBIS 502.. D..

Albero uscita cavo
Hollow output shaft

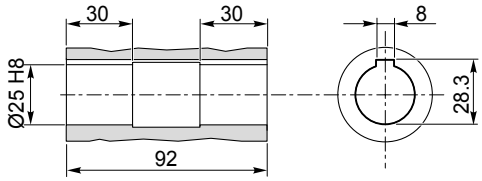

Dimensioni *Dimensions*

CMB 633.. - CMBIS 633..

CMB 633 U..

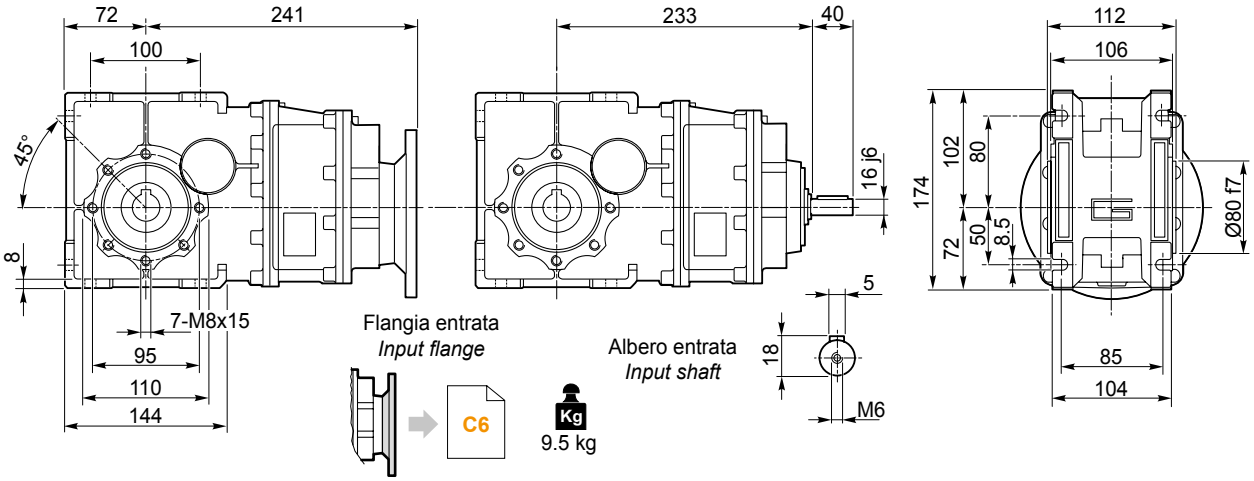

CMBIS 633 U..

CMB 633 F..

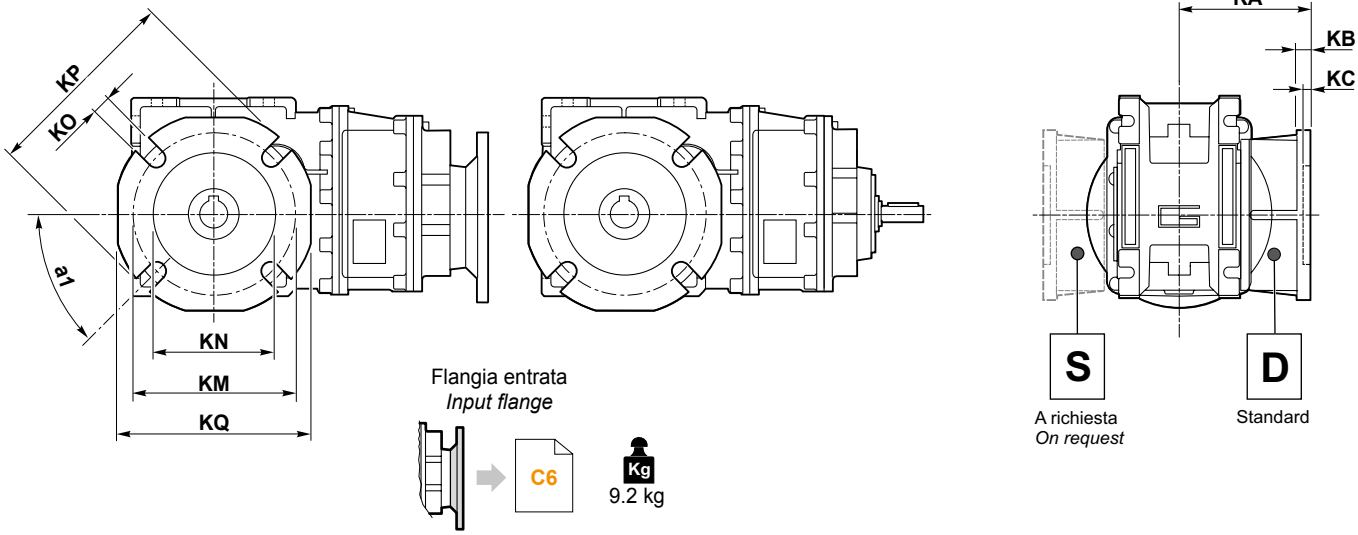

CMBIS 633 F..

Versione **F** / ***F Version***										
CMB CMBIS	**a_1**	**KA**	**KB**	**KC**	**KM**	**KN** H8	**KO**	**KP**	**KQ**	**Flangia / *Flange*** Tipo / *Type*
633	45°	82	10	6	150-160	115	11	180	142	**F**
	45°	112	10	8	150-160	115	11	180	142	**FL**
	45°	98	11	5	165	130	11	200	160	**FB**

CMB 633.. D.. - CMBIS 633.. D..

Albero uscita cavo
Hollow output shaft

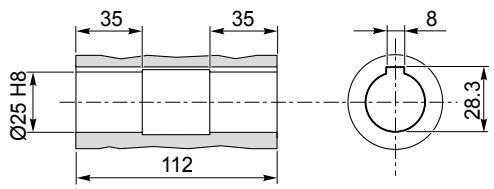

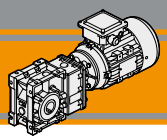

Dimensioni ***Dimensions***

CMB 903.. - CMBIS 903..

CMB 903 U..

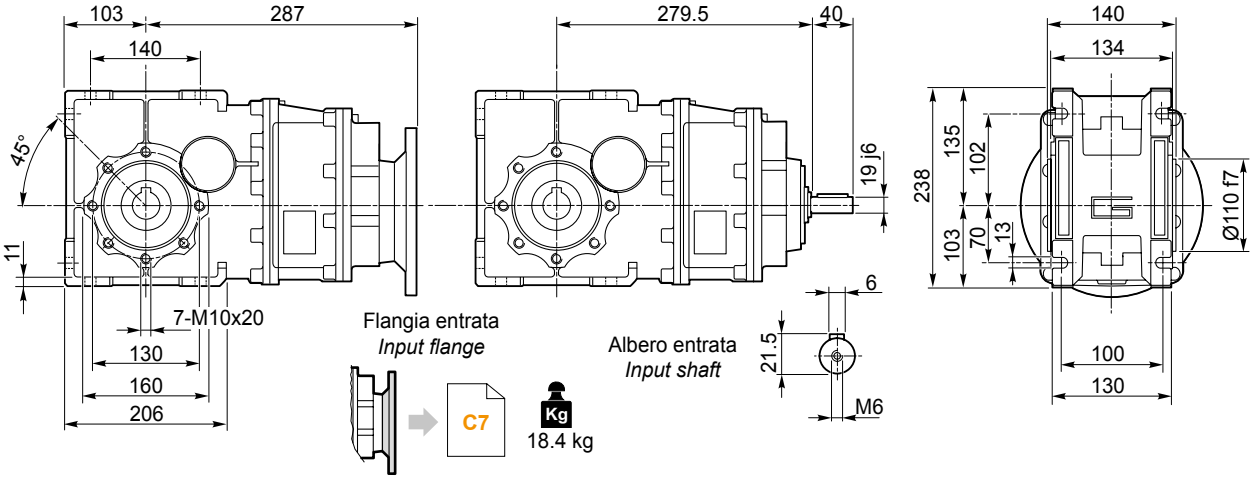

CMBIS 903 U..

CMB 903 F..

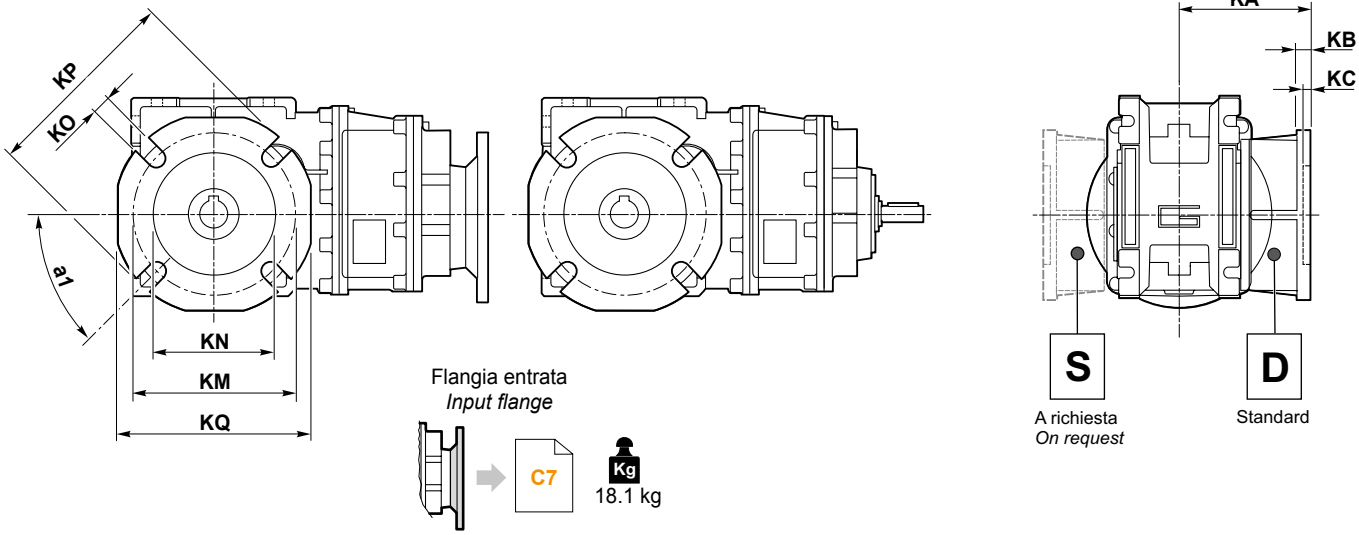

CMBIS 903 F..

Versione **F** / ***F Version***										
CMB CMBIS	**a_1**	**KA**	**KB**	**KC**	**KM**	**KN** H8	**KO**	**KP**	**KQ**	**Flangia / *Flange*** Tipo / *Type*
903	45°	111	13	6	175-188	152	14	210	200	**F**

CMB 903.. D.. - CMBIS 903.. D..

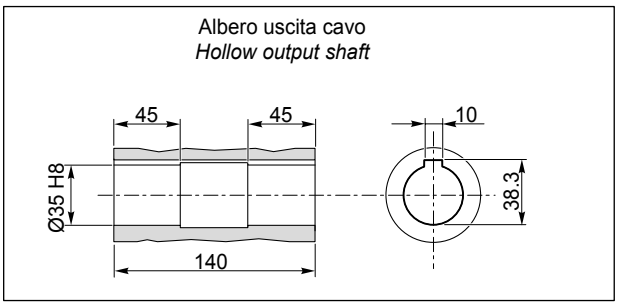

Accessori / *Accessories*

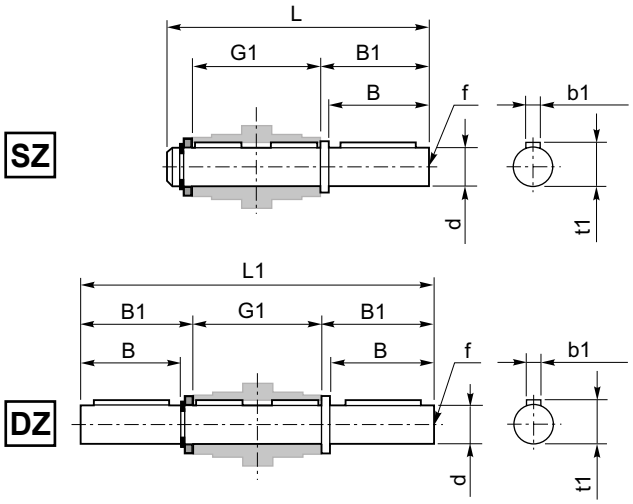

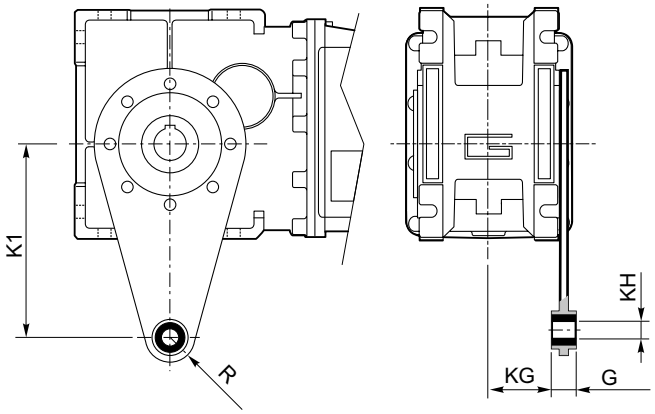

Albero lento / *Output shaft*

CMB CMBIS	d h7	B	B1	G1	L	L1	f	b1	t1
402	18	40	43	78	128	164	M6	6	20.5
502	25	50	53.5	92	153	199	M10	8	28
633	25	50	53.5	112	173	219	M10	8	28
903	35	80	84.5	140	234	309	M12	10	38

Braccio di reazione / *Torque arm*

CMB CMBIS	K1	G	KG	KH	R
402	100	14	31	10	18
502	100	14	38	10	18
633	150	14	47.5	10	18
903	200	25	56.5	20	30

SC - *Safety cover*

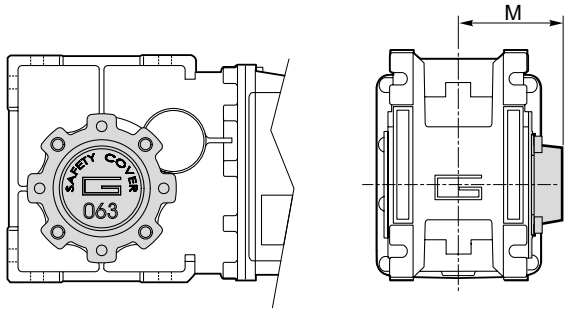

CMB CMBIS	M
402	54.5
502	62.5
633	73
903	94

MA TRANSTECNO S.A.P.I. DE C.V.
Av. Mundial # 176, Parque Industrial
JM Apodaca, Nuevo León,
C.P. 66600
MÉXICO
T +52 8113340920
info@transtecno.com.mx
www.transtecno.com.mx

TRANSTECNO SRL
Via Caduti di Sabbiuno, 11/D-E
40011 Anzola dell'Emilia (BO)
ITALY
T+39 051 64 25 811
F +39 051 73 39 04
sales@transtecno.com
www.transtecno.com

HANGZHOU TRANSTECNO POWER TRANSMISSIONS CO LTD
No.4 Xiuyan Road Fengdu Industry Zone
Pingyao Town Yuhang District
Hangzhou City, Zhejiang Province
311115 – CHINA
T +86 571 86 92 02 60
F +86 571 86 92 18 10
info-china@transtecno.com
www.transtecno.cn

CATACALU0118

TRANSTECNO U.S.A. LLC
5440 S.W. 156th Place Miami,
FL 33185 - USA
Tel: +1 (305) 220-4423
Fax: +1 (305) 220-5945
usaoffice@transtecno.com

TRANSTECNO B.V.
Ind. terrein Wieken/Vinkenhoef
De Stuwdam,43
3815 KM Amersfoort - NETHERLANDS
Tel: +31(0) 33 45 19 505
Fax: +31(0) 33 45 19 506
info@transtecno.nl
www.transtecno.nl

SALES OFFICE INDIA
A/10, Anagha, S.N. Road, Mulund (W) Mumbai
400080 - INDIA
Tel: +91 9820614698
Fax-Italy: +39 051 733 904
indiaoffice@transtecno.com

SALES OFFICE BRAZIL
Rua Dr. Freire Alemão 155 / 402 - CEP. 90450-060
Auxiliadora Porto Alegre RS - BRAZIL
Tel: +55 51 3251 5447
Fax: +55 51 3251 5447
Mobile: +55 51 811 45 962
braziloffice@transtecno.com
www.transtecno.com.br

TRANSTECNO IBÉRICA
THE MODULAR GEARMOTOR, S.A.
C/Enginy, 2 Nave 6 - 08850 Gavà (Barcelona) - SPAIN
Tel: +34 931 598 950
info@transtecno.es
www.transtecno.es

SALES OFFICE SOUTH KOREA
D-304 Songdo BRC Smart Valley 30, Songdomirae-ro,
Yeonsu-gu, Incheon, 406-840 - KOREA
Tel: +82 70 8288 2107
Fax: +82 32 815 2107
Mobile: +82 10 5094 2107
koreaoffice@transtecno.com

SALES OFFICE FRANCE
12 Impasse des Mûriers
38300 Ruy - FRANCE
Tel: +33 (0) 6 85 12 09 87
Fax-Italy: +39 051 733 904
franceoffice@transtecno.com
www.transtecno.fr

SALES OFFICE OCEANIA
44 Northview drive, Sunshine west 3020
Victoria - AUSTRALIA
Ph +61 03 9312 4722
Fax +61 03 9312 4714
Mobile: +61 0438060997
oceaniaoffice@transtecno.com
www.transtecno.com.au

TRANSTECNO®
the modular gearmotor

www.transtecno.com

designed by Procedi srl