TRANSTECNO®
the modular gearmotor

CMG

CMG

CMG Alu

Motoriduttori ad ingranaggi cilindrici
Helical in-line gearmotors

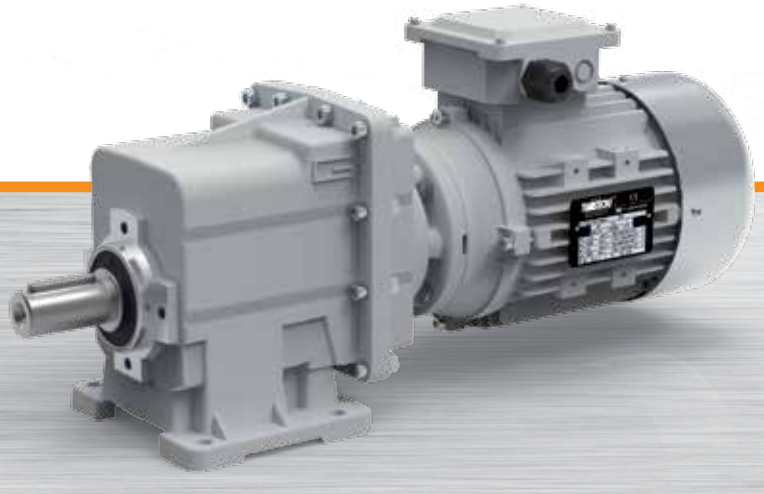

TRANSTECNO · GENUINE · PRODUCTS ·

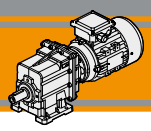

ENERGY SAVING

Indice	*Index*	Pag. *Page*
Caratteristiche tecniche	*Technical features*	**B2**
Designazione	*Classification*	**B3**
Sensi di rotazione	*Direction of rotation*	**B4**
Simbologia	*Symbols*	**B4**
Lubrificazione	*Lubrication*	**B4**
Carichi radiali	*Radial loads*	**B5**
Dati tecnici	*Technical data*	**B6**
Dimensioni	*Dimensions*	**B18**

Questa sezione annulla e sostituisce ogni precedente edizione o revisione. Qualora questa sezione non Vi sia giunta in distribuzione controllata, l'aggiornamento dei dati ivi contenuto non è assicurato. **In tal caso la versione più aggiornata è disponibile sul nostro sito internet www.transtecno.com**

This section replaces any previous edition and revision. If you obtained this catalogue other than through controlled distribution channels, the most up to date content is not guaranteed. ***In this case the latest version is available on our web site www.transtecno.com***

Caratteristiche tecniche

I motoriduttori ad ingranaggi cilindrici della serie CMG sono caratterizzati da un elevato grado di modularità: partendo da un corpo di base è possibile configurarlo secondo le esigenze, con flangia o piede.

Caratteristiche comuni a tutta la serie:

- Carcassa e flangia PAM in pressofusione di alluminio per le taglie 00, 01, 02, 03 e 04.
- Piedi e flange d'uscita in ghisa;
- Ingranaggi cilindrici a denti elicoidali, induriti e rettificati;
- Lubrificazione permanente con olio sintetico.

Technical features

The high degree of modularity is a design feature of CMG helical in-line gearmotors range. It is possible to set up the version required using flanges or feet.

The main features of CMG range are:

- *Die-cast aluminium housings and input flanges for sizes 00, 01, 02, 03 and 04.*
- *Cast iron feet and output flanges;*
- *Ground-hardened helical gears;*
- *Permanent synthetic oil long-life lubrication.*

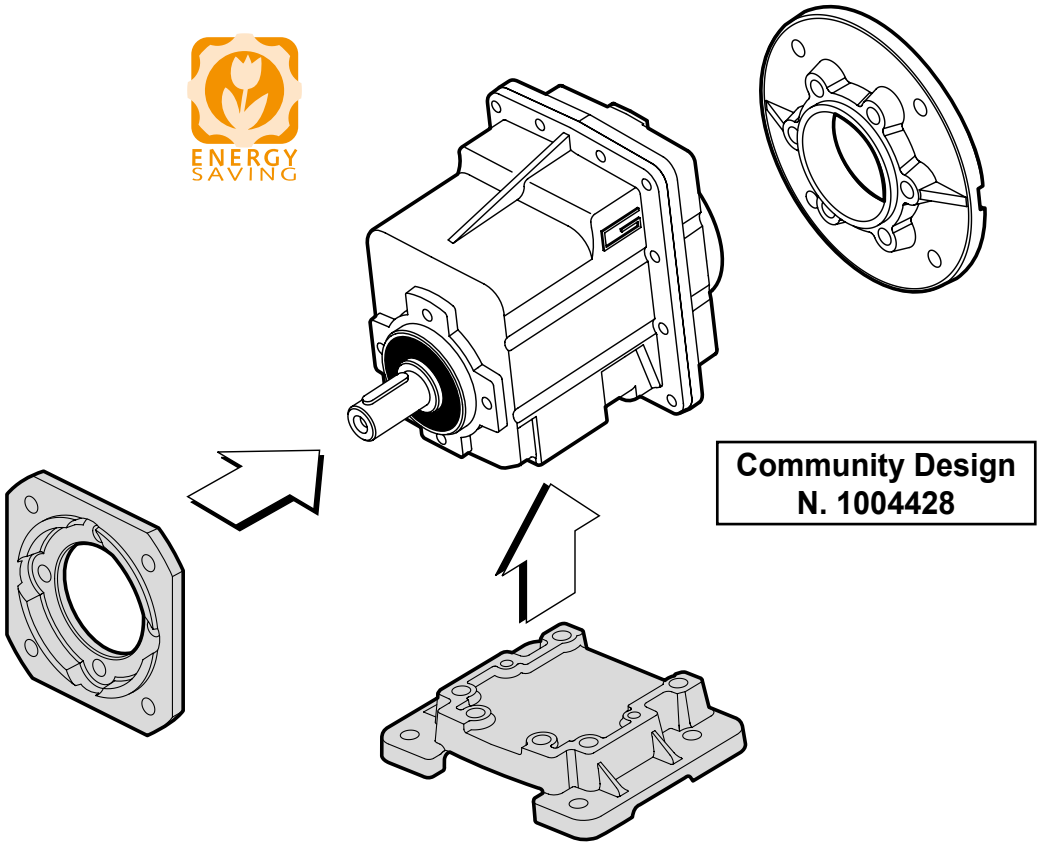

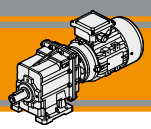

Designazione — *Classification*

U

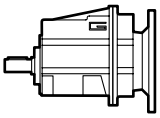

H

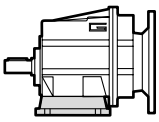

F

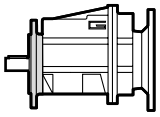

H/F

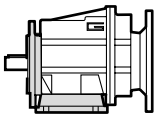

RIDUTTORE / *GEARBOX*

CMG	01	2	H65	9.81	D20	71	B14
Tipo *Type*	Grandezza *Size*	Stadi *Stages*	Versione *Version*	Rapporto *Ratio*	Albero uscita *Output shaft*	IEC	Forma costruttiva *Version*
CMG	**00** **01** **02** **03** **04**	**2** **3**	**U...** **H...** **F...** **H.../F...**	vedi tabelle *see tables*	vedi tabelle *see tables*	**56..** **—** **112..**	**B5** **B14**

U

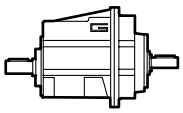

H

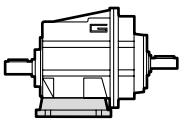

F

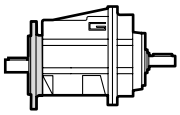

H/F

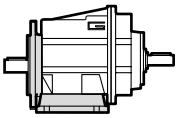

RIDUTTORE / *GEARBOX*

CMGIS	01	2	U	9.81	D20
Tipo *Type*	Grandezza *Size*	Stadi *Stages*	Versione *Version*	Rapporto *Ratio*	Albero uscita *Output shaft*
CMGIS	**00** **01** **02** **03** **04**	**2** **3**	**U...** **H...** **F...** **H.../F...**	vedi tabelle *see tables*	vedi tabelle *see tables*

MOTORE / *MOTOR*

0.75kW	4p	3ph	230/400V	50Hz	T1
Potenza *Power*	Poli *Poles*	Fasi *Phases*	Tensione *Voltage*	Frequenza *Frequency*	Pos. morsettiera *Terminal box pos.*
vedi tabelle *see tables*	**2p** **4p** **6p** **8p**	**1ph** **3ph**	**230V** **230/400V**	**50Hz** **60Hz**	**T1** (Std) **T4** **T2** **T3**

Sensi di rotazione — *Direction of rotation*

CMG...2
CMGIS..2

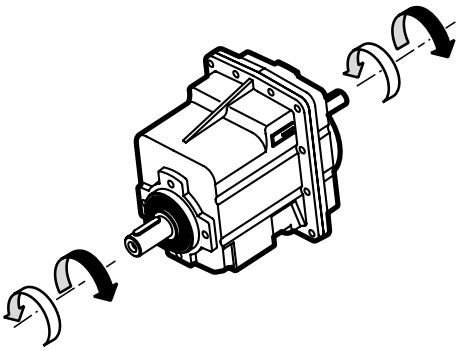

CMG...3
CMGIS..3

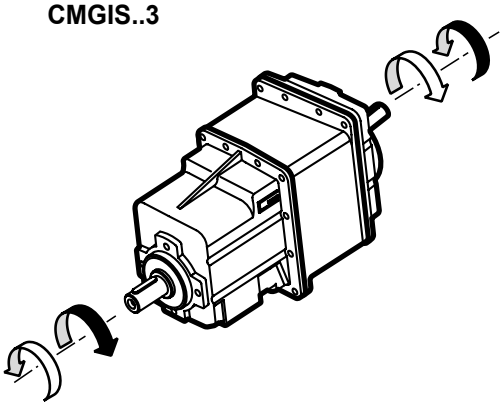

Simbologia — *Symbols*

n_1	[min^{-1}]	Velocità in ingresso / *Input speed*
n_2	[min^{-1}]	Velocità in uscita / *Output speed*
i		Rapporto di riduzione / *Ratio*
P_1	[kW]	Potenza in entrata / *Input power*
M_2	[Nm]	Coppia nominale in uscita in funzione di P_1 / *Output torque referred to P_1*
Pn_1	[kW]	Potenza nominale in entrata / *Nominal input power*
Mn_2	[Nm]	Coppia nominale in uscita in funzione di Pn_1 / *Nominal output torque referred to Pn_1*
sf		Fattore di servizio / *Service factor*
R_2	[N]	Carico radiale ammissibile in uscita / *Permitted output radial load*
A_2	[N]	Carico assiale ammissibile in uscita / *Permitted output axial load*

Lubrificazione — *Lubrication*

Tutti i motoriduttori nelle taglie 00, 01, 02, 03 e 04 sono forniti completi di lubrificante sintetico viscosità 320, pertanto possono essere installati in qualunque posizione di montaggio e non necessitano di manutenzione.

Permanent synthetic oil long-life lubrication (viscosity grade 320) makes it possible to use sizes 00, 01, 02, 03 and 04 in all mounting positions; for this reason they can be installed in any assembly position and do not require maintenance.

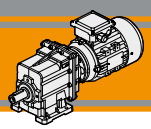

Carichi radiali

Radial loads

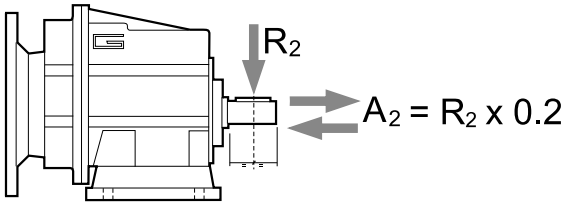

n_2 [min^{-1}]	R_2 [N]				
	CMG 00	CMG 01	CMG 02	CMG 03	CMG 04
700	416	764	1529	1987	2379
600	437	805	1609	2092	2504
500	465	855	1710	2223	2661
400	501	921	1842	2395	2866
250	586	1077	2154	2801	3353
180	653	1323	2554	3321	3897
150	748	1406	2714	3529	4244
120	806	1631	3467	3801	4572
100	958	1842	3684	4507	5234
80	1032	1984	3969	5042	5991
60	1136	2184	4368	5549	6594
40	1300	2500	5000	6500	8000
10	1300	2500	5000	6500	8000

Quando il carico radiale risultante non è applicato sulla mezzeria dell'albero occorre calcolare quello effettivo con la seguente formula:

When the resulting radial load is not applied on the centre line of the shaft it is necessary to calculate the effective load with the following formula:

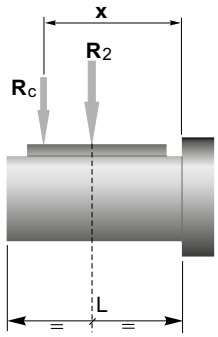

	CMG 00	CMG 01	CMG 02	CMG 03	CMG 04
a	73	104	117	132	150
b	53	84	92	102	115
R_{2MAX}	1300	2500	5000	6500	8000

$$R_c = \frac{R_2 \cdot a}{(b+x)} \leq R_{2MAX}$$

$$R \leq R_c$$

a, b = valori riportati nella tabella
a, b = values given in the table

Dati tecnici — n_1 1400 min^{-1} — *Technical data*

	n_2 [min^{-1}]	Mn_2 [Nm]	Pn_1 [kW]	i	IEC Motori applicabili *IEC Motor adapters*			
CMGIS 002					**56 B5/B14**	**63 B5/B14**	**71 B5/B14**	**80 B5/B14**
	279	40	1.2	5.03				
	230	40	1.0	6.10				
	187	40	0.82	7.49				
	156	50	0.85	8.99				
	138	50	0.75	10.16				
	116	50	0.63	12.07				
	105	70	0.80	13.40				
	92.5	70	0.71	15.14				
	77.1	70	0.59	18.17				
	64.9	70	0.50	21.58				
	59.6	70	0.45	23.51				
	55.8	70	0.43	25.10				*
	51.7	70	0.39	27.08				*
	43.1	70	0.33	32.49				*
	33.3	70	0.25	42.04				*
	31.2	70	0.24	44.89				*
	28.7	70	0.22	48.86				*
	25.4	70	0.19	55.10				*

N.B.
Le aree evidenziate indicano l'applicabilità della corrispondente grandezza motore.

N.B.
Highlighted areas indicate motor inputs available on each size of unit.

*** =** Il fattore di servizio (**sf**) deve essere scelto in funzione dell'applicazione: si prega di contattare il nostro Servizio Tecnico.

Prima di eseguire la scelta del motoriduttore riferirsi alle prestazioni elencate nelle tabelle dalla pag. B11 alla pag. B17

**** =*** *The service factor (**sf**) has to be selected depending on application: please contact our Technical Department.*

Before selecting any gearbox, please read the performance values shown in the tables on page B11 to B17.

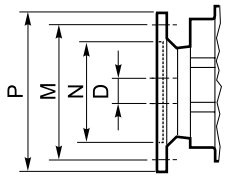

Dimensioni IEC / *IEC Dimensions*								
	56 B5	**56 B14**	**63 B5**	**63 B14**	**71 B5**	**71 B14**	**80 B5**	**80 B14**
N	80	50	95	60	110	70	130	80
M	100	65	115	75	130	85	165	100
P	120	80	140	90	160	105	200	120
D	9		11		14		19	

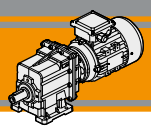

Dati tecnici — n_1 1400 min^{-1} — *Technical data*

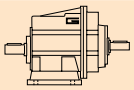

	n_2 [min^{-1}]	Mn_2 [Nm]	Pn_1 [kW]	i	IEC Motori applicabili / *IEC Motor adapters*			
CMGIS 012					**63 B5**	**71 B5/B14**	**80 B5/B14**	**90 B5/B14**
	367	60	2.4	3.82				
	302	60	2.0	4.63				
	246	60	1.6	5.69				
	181	80	1.6	7.72				
	153	80	1.3	9.17				
	143	80	1.2	9.81				
	122	100	1.3	11.50				
	118	100	1.3	11.90				
	101	120	1.3	13.80				
	95.7	120	1.3	14.62				
	78.4	120	1.0	17.86				
	73.4	120	1.0	19.07				
	70.6	120	0.92	19.83				
	59.4	120	0.78	23.56				*
	47.4	120	0.62	29.56				*
	39.5	120	0.52	35.47				*
	30.5	120	0.40	45.89			*	*
	28.6	120	0.37	49.00			*	*
	26.3	120	0.34	53.33			*	*
	23.3	120	0.30	60.15			*	*
CMGIS 013					**63 B5**	**71 B5/B14**	**80 B5/B14**	**90 B5/B14**
	22.1	120	0.30	63.22			*	*
	18.6	120	0.25	75.08			*	*
	15.7	120	0.21	89.17			*	*
	12.4	120	0.17	113.05		*	*	*
	10.4	120	0.14	134.27		*	*	*
	8.1	120	0.11	173.72		*	*	*
	6.9	120	0.09	202.16		*	*	*
	5.4	120	0.07	261.57		*	*	*
	4.6	120	0.06	304.00		*	*	*
	3.6	120	0.05	393.33		*	*	*
	3.2	120	0.04	443.59		*	*	*

N.B.
Le aree evidenziate indicano l'applicabilità della corrispondente grandezza motore.

N.B.
Highlighted areas indicate motor inputs available on each size of unit.

*** =** Il fattore di servizio (**sf**) deve essere scelto in funzione dell'applicazione: si prega di contattare il nostro Servizio Tecnico.

Prima di eseguire la scelta del motoriduttore riferirsi alle prestazioni elencate nelle tabelle dalla pag. B11 alla pag. B17

**** =*** *The service factor (**sf**) has to be selected depending on application: please contact our Technical Department.*

Before selecting any gearbox, please read the performance values shown in the tables on page B11 to B17.

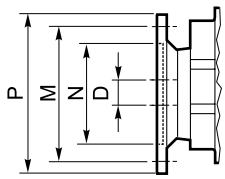

Dimensioni IEC / *IEC Dimensions*							
	63 B5	**71 B5**	**71 B14**	**80 B5**	**80 B14**	**90 B5**	**90 B14**
N	95	110	70	130	80	130	95
M	115	130	85	165	100	165	115
P	140	160	105	200	120	200	140
D	11	14		19		24	

Dati tecnici — n_1 1400 min^{-1} — *Technical data*

	n_2 [min^{-1}]	Mn_2 [Nm]	Pn_1 [kW]	i	IEC Motori applicabili / *IEC Motor adapters*			
CMGIS 022					**63 B5**	**71 B5/B14**	**80 B5/B14**	**90 B5/B14**
	383	100	4.2	3.66				
	316	100	3.4	4.43				
	257	100	2.8	5.45				
	190	120	2.5	7.39				
	159	120	2.1	8.78				
	141	120	1.8	9.93				
	127	200	2.8	11.01				
	116	200	2.5	12.05				
	106	200	2.3	13.21				
	94.6	200	2.1	14.81				
	81.9	160	1.4	17.10				
	76.7	160	1.3	18.26				
	69.7	200	1.5	20.08				
	58.7	200	1.3	23.85				
	46.8	200	1.0	29.93				
	39.0	200	0.85	35.91				
	30.1	200	0.66	46.46				*
	28.2	200	0.62	49.61				*
	25.9	200	0.57	54.00				*
	23.0	200	0.50	60.90				*
CMGIS 023					**63 B5**	**71 B5/B14**	**80 B5/B14**	**90 B5/B14**
	21.9	200	0.49	64.01				*
	18.4	200	0.41	76.02			*	*
	15.5	200	0.35	90.29			*	*
	12.2	200	0.27	114.46			*	*
	10.3	200	0.23	135.95			*	*
	8.0	200	0.18	175.89		*	*	*
	6.8	200	0.15	204.69		*	*	*
	5.3	200	0.12	264.84		*	*	*
	4.5	200	0.10	307.80		*	*	*
	3.5	200	0.08	398. 25		*	*	*
	3.1	200	0.07	449.14		*	*	*

N.B.
Le aree evidenziate indicano l'applicabilità della corrispondente grandezza motore.

N.B.
Highlighted areas indicate motor inputs available on each size of unit.

*** =** Il fattore di servizio (**sf**) deve essere scelto in funzione dell'applicazione: si prega di contattare il nostro Servizio Tecnico.

Prima di eseguire la scelta del motoriduttore riferirsi alle prestazioni elencate nelle tabelle dalla pag. B11 alla pag. B17

**** =*** *The service factor (**sf**) has to be selected depending on application: please contact our Technical Department.*

Before selecting any gearbox, please read the performance values shown in the tables on page B11 to B17.

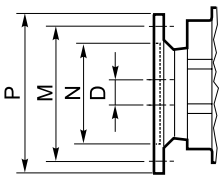

Dimensioni IEC / *IEC Dimensions*							
	63 B5	**71 B5**	**71 B14**	**80 B5**	**80 B14**	**90 B5**	**90 B14**
N	95	110	70	130	80	130	95
M	115	130	85	165	100	165	115
P	140	160	105	200	120	200	140
D	11	14		19		24	

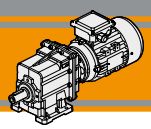

Dati tecnici — n_1 1400 min^{-1} — *Technical data*

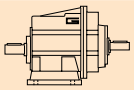

	n_2 [min^{-1}]	Mn_2 [Nm]	Pn_1 [kW]	i	IEC Motori applicabili / *IEC Motor adapters*				
CMGIS 032					**71 B5**	**80 B5/B14**	**90 B5/B14**	**100 B5/B14**	**112 B5/B14**
	374	150	6.1	3.74	B				
	311	150	5.1	4.50	B				
	255	150	4.2	5.48	B				
	222	180	4.4	6.31	B				
	177	180	3.5	7.93	B				
	154	180	3.0	9.08	B				*
	128	180	2.5	10.93	B				*
	111	250	3.0	12.60	B				*
	105	250	2.9	13.30	B				*
	91.5	280	2.8	15.30	B				*
	76.9	280	2.3	18.21	B				*
	72.8	280	2.2	19.24	B				*
	66.2	280	2.0	21.15	B				*
	56.0	300	1.8	24.99	B				*
	45.8	300	1.5	30.57	B			*	*
	40.9	300	1.3	34.20	B			*	*
	36.2	300	1.2	38.63	B			*	*
	31.7	300	1.0	44.18	B			*	*
	27.3	300	0.89	51.30	B		*	*	*
	23.0	300	0.75	60.80	B		*	*	*

CMGIS 033				**63 B5**	**71 B5/B14**	**80 B5/B14**	**90 B5/B14**
19.2	300	0.64	72.83				*
14.4	300	0.48	97.45				*
12.1	300	0.40	115.74			*	*
9.9	300	0.33	140.81			*	*
8.0	300	0.27	174.26			*	*
6.2	300	0.21	225.47			*	*
5.3	300	0.18	262.05		*	*	*
4.3	300	0.14	325.79		*	*	*
3.7	300	0.12	378.64		*	*	*
3.3	300	0.11	427.03		*	*	*

N.B.
Le aree evidenziate indicano l'applicabilità della corrispondente grandezza motore.
B = Boccola di riduzione in acciaio.

*** =** Il fattore di servizio (**sf**) deve essere scelto in funzione dell'applicazione: si prega di contattare il nostro Servizio Tecnico.

Prima di eseguire la scelta del motoriduttore riferirsi alle prestazioni elencate nelle tabelle dalla pag. B11 alla pag. B17

N.B.
Highlighted areas indicate motor inputs available on each size of unit.
***B** = Metal shaft sleeve.*

**** =** The service factor (**sf**) has to be selected depending on application: please contact our Technical Department.*

Before selecting any gearbox, please read the performance values shown in the tables on page B11 to B17.

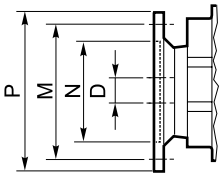

Dimensioni IEC / *IEC Dimensions*									
	63 B5	**71 B5**	**71 B14**	**80 B5**	**80 B14**	**90 B5**	**90 B14**	**100/112 B5**	**100/112 B14**
N	95	110	70	130	80	130	95	180	110
M	115	130	85	165	100	165	115	215	130
P	140	160	105	200	120	200	140	250	160
D	11	14		19		24		28	

Dati tecnici — n_1 1400 min^{-1} — *Technical data*

	n_2 [min^{-1}]	Mn_2 [Nm]	Pn_1 [kW]	i	IEC Motori applicabili / *IEC Motor adapters*				
CMGIS 042					**71 B5**	**80 B5/B14**	**90 B5/B14**	**100 B5/B14**	**112 B5/B14**
	374	230	9.4	3.74	**B**				
	311	230	7.8	4.50	**B**				
	255	230	6.4	5.48	**B**				
	222	260	6.3	6.31	**B**				
	177	260	5.0	7.93	**B**				
	154	280	4.7	9.08	**B**				
	128	280	3.9	10.93	**B**				
	111	350	4.2	12.60	**B**				
	105	350	4.0	13.30	**B**				
	91.5	420	4.2	15.30	**B**				
	76.9	420	3.5	18.21	**B**				
	72.8	420	3.3	19.24	**B**				
	56.0	500	3.1	24.99	**B**				
	45.8	500	2.5	30.57	**B**				*
	40.9	500	2.2	34.20	**B**				*
	36.2	500	2.0	38.63	**B**				*
	31.7	500	1.7	44.18	**B**			*	*
	27.3	500	1.5	51.30	**B**			*	*
	23.0	480	1.2	60.80	**B**			*	*
CMGIS 043					**63 B5**	**71 B5/B14**	**80 B5/B14**	**90 B5/B14**	
	19.2	500	1.1	72.83					
	14.4	500	0.80	97.45				*	
	12.1	500	0.67	115.74				*	
	9.9	500	0.55	140.81				*	
	8.0	500	0.45	174.26				*	
	6.2	500	0.35	225.47			*	*	
	5.3	500	0.30	262.05			*	*	
	4.3	500	0.24	325.79			*	*	
	3.7	500	0.21	378.64			*	*	
	3.3	500	0.18	427.03		*	*	*	

N.B.
Le aree evidenziate indicano l'applicabilità della corrispondente grandezza motore.
B = Boccola di riduzione in acciaio.

*** =** Il fattore di servizio (**sf**) deve essere scelto in funzione dell'applicazione: si prega di contattare il nostro Servizio Tecnico.

Prima di eseguire la scelta del motoriduttore riferirsi alle prestazioni elencate nelle tabelle dalla pag. B11 alla pag. B17

N.B.
Highlighted areas indicate motor inputs available on each size of unit.
***B** = Metal shaft sleeve.*

**** =** The service factor (**sf**) has to be selected depending on application: please contact our Technical Department.*

Before selecting any gearbox, please read the performance values shown in the tables on page B11 to B17.

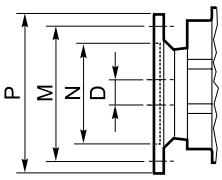

Dimensioni IEC / *IEC Dimensions*									
	63 B5	**71 B5**	**71 B14**	**80 B5**	**80 B14**	**90 B5**	**90 B14**	**100/112 B5**	**100/112 B14**
N	95	110	70	130	80	130	95	180	110
M	115	130	85	165	100	165	115	215	130
P	140	160	105	200	120	200	140	250	160
D	11	14		19		24		28	

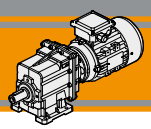

Dati tecnici

Technical data

P_1 [kW]	n_2 [min^{-1}]	M_2 [Nm]	sf	i		IEC
0.06						
56A4 (1400 min^{-1})	**279**	2	20.3	5.03	**CMG002**	**B5/B14**
	230	2	16.7	6.10		**B5/B14**
	187	3	13.6	7.49		**B5/B14**
	156	4	14.2	8.99		**B5/B14**
	138	4	12.5	10.16		**B5/B14**
	116	5	10.5	12.07		**B5/B14**
	105	5	13.3	13.40		**B5/B14**
	92.5	6	11.8	15.14		**B5/B14**
	77.1	7	9.8	18.17		**B5/B14**
	64.9	8	8.3	21.58		**B5/B14**
	59.6	9	7.6	23.51		**B5/B14**
	55.8	10	7.1	25.10		**B5/B14**
	51.7	11	6.6	27.08		**B5/B14**
	43.1	13	5.5	32.49		**B5/B14**
	33.3	17	4.2	42.04		**B5/B14**
	31.2	18	4.0	44.89		**B5/B14**
	28.7	19	3.6	48.86		**B5/B14**
	25.4	22	3.2	55.10		**B5/B14**
0.09						
56B4 (1400 min^{-1})	**279**	3	13.5	5.03	**CMG002**	**B5/B14**
	230	4	11.1	6.10		**B5/B14**
	187	4	9.1	7.49		**B5/B14**
	156	5	9.4	8.99		**B5/B14**
	138	6	8.3	10.16		**B5/B14**
	116	7	7.0	12.07		**B5/B14**
	105	8	8.9	13.40		**B5/B14**
	92.5	9	7.8	15.14		**B5/B14**
	77.1	11	6.5	18.17		**B5/B14**
	64.9	13	5.5	21.58		**B5/B14**
	59.6	14	5.1	23.51		**B5/B14**
	55.8	15	4.7	25.10		**B5/B14**
	51.7	16	4.4	27.08		**B5/B14**
	43.1	19	3.7	32.49		**B5/B14**
	33.3	25	2.8	42.04		**B5/B14**
	31.2	26	2.6	44.89		**B5/B14**
	28.7	29	2.4	48.86		**B5/B14**
	25.4	32	2.2	55.10		**B5/B14**
0.12						
63A4 (1400 min^{-1})	**279**	4	10.1	5.03	**CMG002**	**B5/B14**
	230	5	8.3	6.10		**B5/B14**
	187	6	6.8	7.49		**B5/B14**
	156	7	7.1	8.99		**B5/B14**
	138	8	6.3	10.16		**B5/B14**
	116	9	5.3	12.07		**B5/B14**
	105	11	6.7	13.40		**B5/B14**
	92.5	12	5.9	15.14		**B5/B14**
	77.1	14	4.9	18.17		**B5/B14**
	64.9	17	4.1	21.58		**B5/B14**
	59.6	18	3.8	23.51		**B5/B14**
	55.8	20	3.5	25.10		**B5/B14**
	51.7	21	3.3	27.08		**B5/B14**
	43.1	26	2.7	32.49		**B5/B14**
	33.3	33	2.1	42.04		**B5/B14**
	31.2	35	2.0	44.89		**B5/B14**
	28.7	38	1.8	48.86		**B5/B14**
	25.4	43	1.6	55.10		**B5/B14**
	59.4	19	6.5	23.56	**CMG012**	**B5**
	47.4	23	5.2	29.56		**B5**
	39.5	28	4.3	35.47		**B5**

P_1 [kW]	n_2 [min^{-1}]	M_2 [Nm]	sf	i		IEC
0.12						
63A4 (1400 min^{-1})	**30.5**	36	3.3	45.89	**CMG012**	**B5**
	28.6	39	3.1	49.00		**B5**
	26.3	42	2.9	53.33		**B5**
	23.3	47	2.5	60.15		**B5**
	22.1	49	2.5	63.22	**CMG013**	**B5**
	18.6	58	2.1	75.08		**B5**
	15.7	69	1.7	89.17		**B5**
	12.4	87	1.4	113.05		**B5**
	10.4	103	1.2	134.27		**B5**
	8.1	134	0.9	173.72		**B5**
	6.9	156	0.8	202.16		**B5**
	5.4	171	0.7	261.57		**B5**
	4.6	171	0.7	304.00		**B5**
	3.6	171	0.7	393.33		**B5**
	3.2	171	0.7	443.59		**B5**
	21.9	49	4.1	64.01	**CMG023**	**B5**
	18.4	58	3.4	76.02		**B5**
	15.5	69	2.9	90.29		**B5**
	12.2	88	2.3	114.46		**B5**
	10.3	105	1.9	135.95		**B5**
	8.0	135	1.5	175.89		**B5**
	6.8	157	1.3	204.69		**B5**
	5.3	204	1.0	264.84		**B5**
	4.5	237	0.8	307.80		**B5**
	3.5	285	0.7	398.25		**B5**
	3.1	285	0.7	449.14		**B5**
	19.2	56	5.4	72.83	**CMG033**	**B5**
	14.4	75	4.0	97.45		**B5**
	12.1	89	3.4	115.74		**B5**
	9.9	108	2.8	140.81		**B5**
	8.0	134	2.2	174.26		**B5**
	6.2	173	1.7	225.47		**B5**
	5.3	202	1.5	262.05		**B5**
	4.3	251	1.2	325.79		**B5**
	3.7	291	1.0	378.64		**B5**
	3.3	329	0.9	427.03		**B5**
	19.2	56	8.9	72.83	**CMG043**	**B5**
	14.4	75	6.7	97.45		**B5**
	12.1	89	5.6	115.74		**B5**
	9.9	108	4.6	140.81		**B5**
	8.0	134	3.7	174.26		**B5**
	6.2	173	2.9	225.47		**B5**
	5.3	202	2.5	262.05		**B5**
	4.3	251	2.0	325.79		**B5**
	3.7	291	1.7	378.64		**B5**
	3.3	329	1.5	427.03		**B5**

N.B.
Verificare sempre che la coppia M2 utilizzata non ecceda il valore indicato nelle caselle in grigio

N.B.
Please check that the output torque M2 does not exceed the value in the grey areas

Dati tecnici

Technical data

P_1 [kW]	n_2 [min^{-1}]	M_2 [Nm]	sf	i		IEC
0.18						
63B4 (1400 min^{-1})	**279**	6	6.8	5.03	**CMG002**	**B5/B14**
	230	7	5.6	6.10		**B5/B14**
	187	9	4.5	7.49		**B5/B14**
	156	11	4.7	8.99		**B5/B14**
	138	12	4.2	10.16		**B5/B14**
	116	14	3.5	12.07		**B5/B14**
	105	16	4.4	13.40		**B5/B14**
	92.5	18	3.9	15.14		**B5/B14**
	77.1	21	3.3	18.17		**B5/B14**
	64.9	25	2.8	21.58		**B5/B14**
	59.6	28	2.5	23.51		**B5/B14**
	55.8	30	2.4	25.10		**B5/B14**
	51.7	32	2.2	27.08		**B5/B14**
	43.1	38	1.8	32.49		**B5/B14**
	33.3	50	1.4	42.04		**B5/B14**
	31.2	53	1.3	44.89		**B5/B14**
	28.7	58	1.2	48.86		**B5/B14**
	25.4	65	1.1	55.10		**B5/B14**
	78.4	21	5.7	17.86	**CMG012**	**B5**
	73.4	22	5.3	19.07		**B5**
	70.6	23	5.1	19.83		**B5**
	59.4	28	4.3	23.56		**B5**
	47.4	35	3.4	29.56		**B5**
	39.5	42	2.9	35.47		**B5**
	30.5	54	2.2	45.89		**B5**
	28.6	58	2.1	49.00		**B5**
	26.3	63	1.9	53.33		**B5**
	23.3	71	1.7	60.15		**B5**
	22.1	73	1.6	63.22	**CMG013**	**B5**
	18.6	87	1.4	75.08		**B5**
	15.7	103	1.2	89.17		**B5**
	12.4	130	0.9	113.05		**B5**
	23.0	72	2.8	60.90	**CMG022**	**B5**
	21.9	74	2.7	64.01	**CMG023**	**B5**
	18.4	88	2.3	76.02		**B5**
	15.5	104	1.9	90.29		**B5**
	12.2	132	1.5	114.46		**B5**
	10.3	157	1.3	135.95		**B5**
	8.0	203	1.0	175.89		**B5**
	6.8	236	0.8	204.69		**B5**
	19.2	84	3.6	72.83	**CMG033**	**B5**
	14.4	112	2.7	97.45		**B5**
	12.1	134	2.2	115.74		**B5**
	9.9	163	1.8	140.81		**B5**
	8.0	201	1.5	174.26		**B5**
	6.2	260	1.2	225.47		**B5**
	5.3	302	1.0	262.05		**B5**
	19.2	84	5.9	72.83	**CMG043**	**B5**
	14.4	112	4.4	97.45		**B5**
	12.1	134	3.7	115.74		**B5**
	9.9	163	3.1	140.81		**B5**
	8.0	201	2.5	174.26		**B5**
	6.2	260	1.9	225.47		**B5**
	5.3	302	1.7	262.05		**B5**
	4.3	376	1.3	325.79		**B5**
	3.7	437	1.1	378.64		**B5**
	3.3	493	1.0	427.03		**B5**

P_1 [kW]	n_2 [min^{-1}]	M_2 [Nm]	sf	i		IEC
0.25						
71A4 (1400 min^{-1})	**279**	8	4.9	5.03	**CMG002**	**B5/B14**
	230	10	4.0	6.10		**B5/B14**
	187	12	3.3	7.49		**B5/B14**
	156	15	3.4	8.99		**B5/B14**
	138	17	3.0	10.16		**B5/B14**
	116	20	2.5	12.07		**B5/B14**
	105	22	3.2	13.40		**B5/B14**
	92.5	25	2.8	15.14		**B5/B14**
	77.1	30	2.4	18.17		**B5/B14**
	64.9	35	2.0	21.58		**B5/B14**
	59.6	38	1.8	23.51		**B5/B14**
	55.8	41	1.7	25.10		**B5/B14**
	51.7	44	1.6	27.08		**B5/B14**
	43.1	53	1.3	32.49		**B5/B14**
	33.3	69	1.0	42.04		**B5/B14**
	31.2	73	1.0	44.89		**B5/B14**
	28.7	80	0.9	48.86		**B5/B14**
	25.4	90	0.8	55.10		**B5/B14**
	367	6	9.6	3.82	**CMG012**	**B5/B14**
	302	8	7.9	4.63		**B5/B14**
	246	9	6.4	5.69		**B5/B14**
	181	13	6.3	7.72		**B5/B14**
	153	15	5.3	9.17		**B5/B14**
	143	16	5.0	9.81		**B5/B14**
	122	19	5.3	11.50		**B5/B14**
	118	19	5.1	11.90		**B5/B14**
	101	23	5.3	13.80		**B5/B14**
	95.7	24	5.0	14.62		**B5/B14**
	78.4	29	4.1	17.86		**B5/B14**
	73.4	31	3.8	19.07		**B5/B14**
	70.6	32	3.7	19.83		**B5/B14**
	59.4	39	3.1	23.56		**B5/B14**
	47.4	48	2.5	29.56		**B5/B14**
	39.5	58	2.1	35.47		**B5/B14**
	30.5	75	1.6	45.89		**B5/B14**
	28.6	80	1.5	49.00		**B5/B14**
	26.3	87	1.4	53.33		**B5/B14**
	23.3	98	1.2	60.15		**B5/B14**
	22.1	101	1.2	63.22	**CMG013**	**B5/B14**
	18.6	120	1.0	75.08		**B5/B14**
	15.7	143	0.8	89.17		**B5/B14**
	383	6	16.7	3.66	**CMG022**	**B5/B14**
	316	7	13.8	4.43		**B5/B14**
	257	9	11.2	5.45		**B5/B14**
	189	12	9.9	7.39		**B5/B14**
	160	14	8.4	8.78		**B5/B14**
	141	16	7.4	9.93		**B5/B14**
	127	18	11.1	11.01		**B5/B14**
	116	20	10.1	12.05		**B5/B14**
	106	22	9.2	13.21		**B5/B14**
	94.6	24	8.3	14.81		**B5/B14**
	81.9	28	5.7	17.10		**B5/B14**
	76.7	30	5.4	18.26		**B5/B14**
	69.7	33	6.1	20.08		**B5/B14**
	58.7	39	5.1	23.85		**B5/B14**
	46.8	49	4.1	29.93		**B5/B14**
	39.0	59	3.4	35.91		**B5/B14**
	30.1	76	2.6	46.46		**B5/B14**
	28.2	81	2.5	49.61		**B5/B14**
	25.9	88	2.3	54.00		**B5/B14**
	23.0	100	2.0	60.90		**B5/B14**

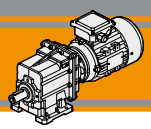

Dati tecnici

Technical data

P_1 [kW]	n_2 [min^{-1}]	M_2 [Nm]	sf	i		IEC
0.25						
71A4 (1400 min^{-1})	**21.9**	103	1.9	64.01	**CMG023**	**B5/B14**
	18.4	122	1.6	76.02		**B5/B14**
	15.5	145	1.4	90.29		**B5/B14**
	12.2	183	1.1	114.46		**B5/B14**
	10.3	218	0.9	135.95		**B5/B14**
	31.7	72	4.1	44.18	**CMG032**	**B5**
	27.3	84	3.6	51.30		**B5**
	19.2	117	2.6	72.83	**CMG033**	**B5/B14**
	14.4	156	1.9	97.45		**B5/B14**
	12.1	186	1.6	115.74		**B5/B14**
	9.9	226	1.3	140.81		**B5/B14**
	8.0	279	1.1	174.26		**B5/B14**
	6.2	361	0.8	225.47		**B5/B14**
	19.2	117	4.3	72.83	**CMG043**	**B5/B14**
	14.4	156	3.2	97.45		**B5/B14**
	12.1	186	2.7	115.74		**B5/B14**
	9.9	226	2.2	140.81		**B5/B14**
	8.0	279	1.8	174.26		**B5/B14**
	6.2	361	1.4	225.47		**B5/B14**
	5.3	420	1.2	262.05		**B5/B14**
	4.3	522	1.0	325.79		**B5/B14**
	3.7	607	0.8	378.64		**B5/B14**
0.37						
71B4 (1400 min^{-1})	**279**	12	3.3	5.03	**CMG002**	**B5/B14**
	230	15	2.7	6.10		**B5/B14**
	187	18	2.2	7.49		**B5/B14**
	156	22	2.3	8.99		**B5/B14**
	138	25	2.0	10.16		**B5/B14**
	116	29	1.7	12.07		**B5/B14**
	105	32	2.2	13.40		**B5/B14**
	92.5	37	1.9	15.14		**B5/B14**
	77.1	44	1.6	18.17		**B5/B14**
	64.9	52	1.3	21.58		**B5/B14**
	59.6	57	1.2	23.51		**B5/B14**
	55.8	61	1.2	25.10		**B5/B14**
	51.7	66	1.1	27.08		**B5/B14**
	43.1	79	0.9	32.49		**B5/B14**
	367	9	6.5	3.82	**CMG012**	**B5/B14**
	302	11	5.3	4.63		**B5/B14**
	246	14	4.4	5.69		**B5/B14**
	181	19	4.3	7.72		**B5/B14**
	153	22	3.6	9.17		**B5/B14**
	143	24	3.4	9.81		**B5/B14**
	122	28	3.6	11.50		**B5/B14**
	118	29	3.5	11.90		**B5/B14**
	101	33	3.6	13.80		**B5/B14**
	95.7	35	3.4	14.62		**B5/B14**
	78.4	43	2.8	17.86		**B5/B14**
	73.4	46	2.6	19.07		**B5/B14**
	70.6	48	2.5	19.83		**B5/B14**
	59.4	57	2.1	23.56		**B5/B14**
	47.4	72	1.7	29.56		**B5/B14**
	39.5	86	1.4	35.47		**B5/B14**
	30.5	111	1.1	45.89		**B5/B14**
	28.6	119	1.0	49.00		**B5/B14**
	26.3	129	0.9	53.33		**B5/B14**
	23.3	146	0.8	60.15		**B5/B14**

P_1 [kW]	n_2 [min^{-1}]	M_2 [Nm]	sf	i		IEC
0.37						
71B4 (1400 min^{-1})	**22.1**	150	0.8	63.22	**CMG013**	**B5/B14**
	383	9	11.3	3.66	**CMG022**	**B5/B14**
	316	11	9.3	4.43		**B5/B14**
	257	13	7.6	5.45		**B5/B14**
	189	18	6.7	7.39		**B5/B14**
	160	21	5.6	8.78		**B5/B14**
	141	24	5.0	9.93		**B5/B14**
	127	27	7.5	11.01		**B5/B14**
	116	29	6.8	12.05		**B5/B14**
	106	32	6.2	13.21		**B5/B14**
	94.6	36	5.6	14.81		**B5/B14**
	81.9	41	3.9	17.10		**B5/B14**
	76.7	44	3.6	18.26		**B5/B14**
	69.7	49	4.1	20.08		**B5/B14**
	58.7	58	3.5	23.85		**B5/B14**
	46.8	73	2.8	29.93		**B5/B14**
	39.0	87	2.3	35.91		**B5/B14**
	30.1	113	1.8	46.46		**B5/B14**
	28.2	120	1.7	49.61		**B5/B14**
	25.9	131	1.5	54.00		**B5/B14**
	23.0	148	1.4	60.90		**B5/B14**
	21.9	152	1.3	64.01	**CMG023**	**B5/B14**
	18.4	180	1.1	76.02		**B5/B14**
	15.5	214	0.9	90.29		**B5/B14**
	374	9	16.5	3.74	**CMG032**	**B5**
	311	11	13.7	4.50		**B5**
	255	13	11.3	5.48		**B5**
	222	15	11.8	6.31		**B5**
	177	19	9.4	7.93		**B5**
	154	22	8.2	9.08		**B5**
	128	26	6.8	10.93		**B5**
	111	31	8.2	12.60		**B5**
	105	32	7.8	13.30		**B5**
	91.5	37	7.6	15.30		**B5**
	76.9	44	6.3	18.21		**B5**
	72.8	47	6.0	19.24		**B5**
	66.2	51	5.5	21.15		**B5**
	56.0	61	5.0	24.99		**B5**
	45.8	74	4.0	30.57		**B5**
	40.9	83	3.6	34.20		**B5**
	36.2	94	3.2	38.63		**B5**
	31.7	107	2.8	44.18		**B5**
	27.3	124	2.4	51.30		**B5**
	23.0	147	2.0	60.80		**B5**
	19.2	173	1.7	72.83	**CMG033**	**B5/B14**
	14.4	231	1.3	97.45		**B5/B14**
	12.1	275	1.1	115.74		**B5/B14**
	9.9	334	0.9	140.81		**B5/B14**
	19.2	173	2.9	72.83	**CMG043**	**B5/B14**
	14.4	231	2.2	97.45		**B5/B14**
	12.1	275	1.8	115.74		**B5/B14**
	9.9	334	1.5	140.81		**B5/B14**
	8.0	413	1.2	174.26		**B5/B14**
	6.2	535	0.9	225.47		**B5/B14**

Dati tecnici

Technical data

P_1 [kW]	n_2 [min^{-1}]	M_2 [Nm]	sf	i		IEC
0.55						
80A4 (1400 min^{-1})	**279**	18	2.2	5.03	**CMG002**	**B5/B14**
	230	22	1.8	6.10		**B5/B14**
	187	27	1.5	7.49		**B5/B14**
	156	32	1.5	8.99		**B5/B14**
	138	37	1.4	10.16		**B5/B14**
	116	43	1.2	12.07		**B5/B14**
	105	48	1.5	13.40		**B5/B14**
	92.5	55	1.3	15.14		**B5/B14**
	77.1	65	1.1	18.17		**B5/B14**
	64.9	78	0.9	21.58		**B5/B14**
	59.6	85	0.8	23.51		**B5/B14**
	23.0	219	0.9	60.90		**B5/B14**
	367	14	4.4	3.82	**CMG012**	**B5/B14**
	302	17	3.6	4.63		**B5/B14**
	246	20	2.9	5.69		**B5/B14**
	181	28	2.9	7.72		**B5/B14**
	153	33	2.4	9.17		**B5/B14**
	143	35	2.3	9.81		**B5/B14**
	122	41	2.4	11.50		**B5/B14**
	118	43	2.3	11.90		**B5/B14**
	101	50	2.4	13.80		**B5/B14**
	95.7	53	2.3	14.62		**B5/B14**
	78.4	64	1.9	17.86		**B5/B14**
	73.4	69	1.7	19.07		**B5/B14**
	70.6	71	1.7	19.83		**B5/B14**
	59.4	85	1.4	23.56		**B5/B14**
	47.4	106	1.1	29.56		**B5/B14**
	39.5	128	0.9	35.47		**B5/B14**
	383	13	7.6	3.66	**CMG022**	**B5/B14**
	316	16	6.3	4.43		**B5/B14**
	257	20	5.1	5.45		**B5/B14**
	189	27	4.5	7.39		**B5/B14**
	160	32	3.8	8.78		**B5/B14**
	141	36	3.4	9.93		**B5/B14**
	127	40	5.0	11.01		**B5/B14**
	116	43	4.6	12.05		**B5/B14**
	106	48	4.2	13.21		**B5/B14**
	94.6	53	3.8	14.81		**B5/B14**
	81.9	62	2.6	17.10		**B5/B14**
	76.7	66	2.4	18.26		**B5/B14**
	69.7	72	2.8	20.08		**B5/B14**
	58.7	86	2.3	23.85		**B5/B14**
	46.8	108	1.9	29.93		**B5/B14**
	39.0	129	1.5	35.91		**B5/B14**
	30.1	167	1.2	46.46		**B5/B14**
	28.2	179	1.1	49.61		**B5/B14**
	25.9	194	1.0	54.00		**B5/B14**
	23.0	219	*0.9*	60.90		**B5/B14**
	21.9	226	*0.9*	64.01	**CMG023**	**B5/B14**
	374	13	11.1	3.74	**CMG032**	**B5/B14**
	311	16	9.2	4.50		**B5/B14**
	255	20	7.6	5.48		**B5/B14**
	222	23	7.9	6.31		**B5/B14**
	177	29	6.3	7.93		**B5/B14**
	154	33	5.5	9.08		**B5/B14**
	128	39	4.6	10.93		**B5/B14**
	111	45	5.5	12.60		**B5/B14**
	105	48	5.2	13.30		**B5/B14**
	91.5	55	5.1	15.30		**B5/B14**
	76.9	66	4.3	18.21		**B5/B14**

P_1 [kW]	n_2 [min^{-1}]	M_2 [Nm]	sf	i		IEC
0.55						
80A4 (1400 min^{-1})	**72.8**	69	4.0	19.24	**CMG032**	**B5/B14**
	66.2	76	3.7	21.15		**B5/B14**
	56.0	90	3.3	24.99		**B5/B14**
	45.8	110	2.7	30.57		**B5/B14**
	40.9	123	2.4	34.20		**B5/B14**
	36.2	139	2.2	38.63		**B5/B14**
	31.7	159	1.9	44.18		**B5/B14**
	27.3	185	1.6	51.30		**B5/B14**
	23.0	219	1.4	60.80		**B5/B14**
	19.2	257	1.2	72.83	**CMG033**	**B5/B14**
	14.4	344	0.9	97.45		**B5/B14**
	23.0	219	2.2	60.80	**CMG042**	**B5/B14**
	19.2	257	1.9	72.83	**CMG043**	**B5/B14**
	14.4	344	1.5	97.45		**B5/B14**
	12.1	408	1.2	115.74		**B5/B14**
	9.9	497	1.0	140.81		**B5/B14**
	9.9	497	1.0	140.81		**B5/B14**
	8.0	615	0.8	174.26		**B5/B14**
0.75						
80B4 (1400 min^{-1})	**279**	25	1.6	5.03	**CMG002**	**B5/B14**
	230	30	1.3	6.10		**B5/B14**
	187	37	1.1	7.49		**B5/B14**
	156	44	1.1	8.99		**B5/B14**
	138	50	1.0	10.16		**B5/B14**
	116	59	0.8	12.07		**B5/B14**
	105	66	1.1	13.40		**B5/B14**
	92.5	74	0.9	15.14		**B5/B14**
	77.1	89	0.8	18.17		**B5/B14**
	367	19	3.2	3.82	**CMG012**	
	302	23	2.6	4.63		**B5/B14**
	246	28	2.1	5.69		**B5/B14**
	181	38	2.1	7.72		**B5/B14**
	153	45	1.8	9.17		**B5/B14**
	143	48	1.7	9.81		**B5/B14**
	122	56	1.8	11.50		**B5/B14**
	118	58	1.7	11.90		**B5/B14**
	101	68	1.8	13.80		**B5/B14**
	95.7	72	1.7	14.62		**B5/B14**
	78.4	88	1.4	17.86		**B5/B14**
	73.4	94	1.3	19.07		**B5/B14**
	70.6	97	1.2	19.83		**B5/B14**
	59.4	116	1.0	23.56		**B5/B14**
	383	18	5.6	3.66	**CMG022**	**B5/B14**
	316	22	4.6	4.43		**B5/B14**
	257	27	3.7	5.45		**B5/B14**
	189	36	3.3	7.39		**B5/B14**
	160	43	2.8	8.78		**B5/B14**
	141	49	2.5	9.93		**B5/B14**
	127	54	3.7	11.01		**B5/B14**
	116	59	3.4	12.05		**B5/B14**
	106	65	3.1	13.21		**B5/B14**
	94.6	73	2.8	14.81		**B5/B14**
	81.9	84	1.9	17.10		**B5/B14**
	76.7	90	1.8	18.26		**B5/B14**
	69.7	99	2.0	20.08		**B5/B14**
	58.7	117	1.7	23.85		**B5/B14**
	46.8	147	1.4	29.93		**B5/B14**
	39.0	176	1.1	35.91		**B5/B14**

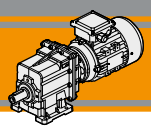

Dati tecnici

Technical data

P_1 [kW]	n_2 [min^{-1}]	M_2 [Nm]	sf	i		IEC
0.75						
80B4 (1400 min^{-1})	**30.1**	228	0.9	46.46	**CMG022**	**B5/B14**
	28.2	244	0.8	49.61		**B5/B14**
	25.9	265	0.8	54.00		**B5/B14**
	374	18	8.2	3.74	**CMG032**	**B5/B14**
	311	22	6.8	4.50		**B5/B14**
	255	27	5.6	5.48		**B5/B14**
	222	31	5.8	6.31		**B5/B14**
	177	39	4.6	7.93		**B5/B14**
	154	45	4.0	9.08		**B5/B14**
	128	54	3.4	10.93		**B5/B14**
	111	62	4.0	12.60		**B5/B14**
	105	65	3.8	13.30		**B5/B14**
	91.5	75	3.7	15.30		**B5/B14**
	76.9	89	3.1	18.21		**B5/B14**
	72.8	94	3.0	19.24		**B5/B14**
	66.2	104	2.7	21.15		**B5/B14**
	56.0	123	2.4	24.99		**B5/B14**
	45.8	150	2.0	30.57		**B5/B14**
	40.9	168	1.8	34.20		**B5/B14**
	36.2	190	1.6	38.63		**B5/B14**
	31.7	217	1.4	44.18		**B5/B14**
	27.3	252	1.2	51.30		**B5/B14**
	23.0	299	1.0	60.80		**B5/B14**
	374	18	12.5	3.74	**CMG042**	**B5/B14**
	311	22	10.4	4.50		**B5/B14**
	255	27	8.5	5.48		**B5/B14**
	222	31	8.4	6.31		**B5/B14**
	177	39	6.7	7.93		**B5/B14**
	154	45	6.3	9.08		**B5/B14**
	128	54	5.2	10.93		**B5/B14**
	111	62	5.7	12.60		**B5/B14**
	105	65	5.4	13.30		**B5/B14**
	91.5	75	5.6	15.30		**B5/B14**
	76.9	89	4.7	18.21		**B5/B14**
	72.8	94	4.4	19.24		**B5/B14**
	56.0	123	4.1	24.99		**B5/B14**
	45.8	150	3.3	30.57		**B5/B14**
	40.9	168	3.0	34.20		**B5/B14**
	36.2	190	2.6	38.63		**B5/B14**
	31.7	217	2.3	44.18		**B5/B14**
	27.3	252	2.0	51.30		**B5/B14**
	23.0	299	1.6	60.80		**B5/B14**
	19.2	350	1.4	72.83	**CMG043**	**B5/B14**
	14.4	469	1.1	97.45		**B5/B14**
	12.1	557	0.9	115.74		**B5/B14**
1.1						
90S4 (1400 min^{-1})	**367**	28	2.2	3.82	**CMG012**	**B5/B14**
	302	33	1.8	4.63		**B5/B14**
	246	41	1.5	5.69		**B5/B14**
	181	56	1.4	7.72		**B5/B14**
	153	66	1.2	9.17		**B5/B14**
	143	71	1.1	9.81		**B5/B14**
	122	83	1.2	11.50		**B5/B14**
	118	86	1.2	11.90		**B5/B14**
	101	99	1.2	13.80		**B5/B14**
	95.7	105	1.1	14.62		**B5/B14**
	78	129	0.9	17.86		**B5/B14**
	73	137	0.9	19.07		**B5/B14**
	70.6	143	0.8	19.83		**B5/B14**

P_1 [kW]	n_2 [min^{-1}]	M_2 [Nm]	sf	i		IEC
1.1						
90S4 (1400 min^{-1})	**383**	26	3.8	3.66	**CMG022**	**B5/B14**
	316	32	3.1	4.43		**B5/B14**
	257	39	2.5	5.45		**B5/B14**
	189	53	2.3	7.39		**B5/B14**
	160	63	1.9	8.78		**B5/B14**
	141	72	1.7	9.93		**B5/B14**
	127	79	2.5	11.01		**B5/B14**
	116	87	2.3	12.05		**B5/B14**
	106	95	2.1	13.21		**B5/B14**
	94.6	107	1.9	14.81		**B5/B14**
	81.9	123	1.3	17.10		**B5/B14**
	76.7	132	1.2	18.26		**B5/B14**
	69.7	145	1.4	20.08		**B5/B14**
	58.7	172	1.2	23.85		**B5/B14**
	46.8	216	0.9	29.93		**B5/B14**
	39.0	259	0.8	35.91		**B5/B14**
	374	27	5.6	3.74	**CMG032**	**B5/B14**
	311	32	4.6	4.50		**B5/B14**
	255	39	3.8	5.48		**B5/B14**
	222	45	4.0	6.31		**B5/B14**
	177	57	3.2	7.93		**B5/B14**
	154	65	2.8	9.08		**B5/B14**
	128	79	2.3	10.93		**B5/B14**
	111	91	2.8	12.60		**B5/B14**
	105	96	2.6	13.30		**B5/B14**
	91.5	110	2.5	15.30		**B5/B14**
	76.9	131	2.1	18.21		**B5/B14**
	72.8	139	2.0	19.24		**B5/B14**
	66.2	152	1.8	21.15		**B5/B14**
	56.0	180	1.7	24.99		**B5/B14**
	45.8	220	1.4	30.57		**B5/B14**
	40.9	246	1.2	34.20		**B5/B14**
	36.2	278	1.1	38.63		**B5/B14**
	31.7	318	0.9	44.18		**B5/B14**
	374	27	8.5	3.74	**CMG042**	**B5/B14**
	311	32	7.1	4.50		**B5/B14**
	255	39	5.8	5.48		**B5/B14**
	222	45	5.7	6.31		**B5/B14**
	177	57	4.6	7.93		**B5/B14**
	154	65	4.3	9.08		**B5/B14**
	128	79	3.6	10.93		**B5/B14**
	111	91	3.9	12.60		**B5/B14**
	105	96	3.7	13.30		**B5/B14**
	91.5	110	3.8	15.30		**B5/B14**
	76.9	131	3.2	18.21		**B5/B14**
	72.8	139	3.0	19.24		**B5/B14**
	56.0	180	2.8	24.99		**B5/B14**
	45.8	220	2.3	30.57		**B5/B14**
	40.8	247	2.0	34.30		**B5/B14**
	36.2	278	1.8	38.63		**B5/B14**
	31.7	318	1.6	44.18		**B5/B14**
	27.3	370	1.4	51.30		**B5/B14**
	23.0	438	1.1	60.80		**B5/B14**
	19.2	514	1.0	72.83	**CMG043**	**B5/B14**
1.5						
90L4 (1400 min^{-1})	**367**	38	1.6	3.82	**CMG012**	**B5/B14**
	302	45	1.3	4.63		**B5/B14**
	246	56	1.1	5.69		**B5/B14**
	181	76	1.1	7.72		**B5/B14**
	153	90	0.9	9.17		**B5/B14**

Dati tecnici

Technical data

P_1 [kW]	n_2 [min^{-1}]	M_2 [Nm]	sf	i		IEC
1.5						
90L4 (1400 min^{-1})	**383**	36	2.8	3.66	**CMG022**	**B5/B14**
	316	44	2.3	4.43		**B5/B14**
	257	54	1.9	5.45		**B5/B14**
	189	73	1.7	7.39		**B5/B14**
	160	86	1.4	8.78		**B5/B14**
	141	98	1.2	9.93		**B5/B14**
	127	108	1.8	11.01		**B5/B14**
	116	118	1.7	12.05		**B5/B14**
	106	130	1.5	13.21		**B5/B14**
	94.6	145	1.4	14.81		**B5/B14**
	81.9	168	1.0	17.10		**B5/B14**
	76.7	179	0.9	18.26		**B5/B14**
	69.7	197	1.0	20.08		**B5/B14**
	58.7	234	0.9	23.85		**B5/B14**
	374	37	4.1	3.74	**CMG032**	**B5/B14**
	311	44	3.4	4.50		**B5/B14**
	255	54	2.8	5.48		**B5/B14**
	222	62	2.9	6.31		**B5/B14**
	177	78	2.3	7.93		**B5/B14**
	154	89	2.0	9.08		**B5/B14**
	128	107	1.7	10.93		**B5/B14**
	111	124	2.0	12.60		**B5/B14**
	105	131	1.9	13.30		**B5/B14**
	91.5	150	1.9	15.30		**B5/B14**
	76.9	179	1.6	18.21		**B5/B14**
	72.8	189	1.5	19.24		**B5/B14**
	66.2	208	1.3	21.15		**B5/B14**
	56.0	245	1.2	24.99		**B5/B14**
	45.8	300	1.0	30.57		**B5/B14**
	40.9	336	0.9	34.20		**B5/B14**
	36.2	379	0.8	38.63		**B5/B14**
	374	37	6.3	3.74	**CMG042**	**B5/B14**
	311	44	5.2	4.50		**B5/B14**
	255	54	4.3	5.48		**B5/B14**
	222	62	4.2	6.31		**B5/B14**
	177	78	3.3	7.93		**B5/B14**
	154	89	3.1	9.08		**B5/B14**
	128	107	2.6	10.93		**B5/B14**
	111	124	2.8	12.60		**B5/B14**
	105	131	2.7	13.30		**B5/B14**
	91.5	150	2.8	15.30		**B5/B14**
	76.9	179	2.3	18.21		**B5/B14**
	72.8	189	2.2	19.24		**B5/B14**
	56.0	245	2.0	24.99		**B5/B14**
	45.8	300	1.7	30.57		**B5/B14**
	40.9	336	1.5	34.20		**B5/B14**
	36.2	379	1.3	38.63		**B5/B14**
	31.7	434	1.2	44.18		**B5/B14**
	27.3	504	1.0	51.30		**B5/B14**
1.85						
90LB4 (1400 min^{-1})	**367**	46	1.3	3.82	**CMG012**	**B5/B14**
	302	56	1.1	4.63		**B5/B14**
	383	44	2.3	3.66	**CMG022**	**B5/B14**
	316	54	1.9	4.43		**B5/B14**
	257	66	1.5	5.45		**B5/B14**
	189	90	1.3	7.39		**B5/B14**
	160	106	1.1	8.78		**B5/B14**
	141	120	1.0	9.93		**B5/B14**
	127	133	1.5	11.01		**B5/B14**
	116	146	1.4	12.05		**B5/B14**

P_1 [kW]	n_2 [min^{-1}]	M_2 [Nm]	sf	i		IEC
1.85						
90LB4 (1400 min^{-1})	**106**	160	1.2	13.21	**CMG022**	**B5/B14**
	94.6	179	1.1	14.81		**B5/B14**
	81.9	207	0.8	17.10		**B5/B14**
	374	45	3.3	3.74	**CMG032**	**B5/B14**
	311	55	2.7	4.50		**B5/B14**
	255	66	2.3	5.48		**B5/B14**
	222	76	2.4	6.31		**B5/B14**
	177	96	1.9	7.93		**B5/B14**
	154	110	1.6	9.08		**B5/B14**
	128	132	1.4	10.93		**B5/B14**
	111	153	1.6	12.60		**B5/B14**
	105	161	1.6	13.30		**B5/B14**
	91.5	185	1.5	15.30		**B5/B14**
	76.9	221	1.3	18.21		**B5/B14**
	72.8	233	1.2	19.24		**B5/B14**
	66.2	256	1.1	21.15		**B5/B14**
	56.0	303	1.0	24.99		**B5/B14**
	45.8	370	0.8	30.57		**B5/B14**
	374	45	5.1	3.74	**CMG042**	**B5/B14**
	311	55	4.2	4.50		**B5/B14**
	255	66	3.5	5.48		**B5/B14**
	222	76	3.4	6.31		**B5/B14**
	177	96	2.7	7.93		**B5/B14**
	154	110	2.5	9.08		**B5/B14**
	128	132	2.1	10.93		**B5/B14**
	111	153	2.3	12.60		**B5/B14**
	105	161	2.2	13.30		**B5/B14**
	91.5	185	2.3	15.30		**B5/B14**
	76.9	221	1.9	18.21		**B5/B14**
	72.8	233	1.8	19.24		**B5/B14**
	56.0	303	1.7	24.99		**B5/B14**
	45.8	370	1.3	30.57		**B5/B14**
	40.9	414	1.2	34.20		**B5/B14**
	36.2	468	1.1	38.63		**B5/B14**
	31.7	535	0.9	44.18		**B5/B14**
	27.3	621	0.8	51.30		**B5/B14**
2.2						
100LA4 (1400 min^{-1})	**374**	54	2.8	3.74	**CMG032**	**B5/B14**
	311	65	2.3	4.50		**B5/B14**
	255	79	1.9	5.48		**B5/B14**
	222	91	2.0	6.31		**B5/B14**
	177	114	1.6	7.93		**B5/B14**
	154	131	1.4	9.08		**B5/B14**
	128	157	1.1	10.93		**B5/B14**
	111	182	1.4	12.60		**B5/B14**
	105	192	1.3	13.30		**B5/B14**
	91.5	220	1.3	15.30		**B5/B14**
	76.9	262	1.1	18.21		**B5/B14**
	72.8	277	1.0	19.24		**B5/B14**
	66.2	305	0.9	21.15		**B5/B14**
	56.0	360	0.8	24.99		**B5/B14**
	374	54	4.3	3.74	**CMG042**	**B5/B14**
	311	65	3.5	4.50		**B5/B14**
	255	79	2.9	5.48		**B5/B14**
	222	91	2.9	6.31		**B5/B14**
	177	114	2.3	7.93		**B5/B14**
	154	131	2.1	9.08		**B5/B14**
	128	157	1.8	10.93		**B5/B14**
	111	182	1.9	12.60		**B5/B14**
	105	192	1.8	13.30		**B5/B14**
	91.5	220	1.9	15.30		**B5/B14**
	76.9	262	1.6	18.21		**B5/B14**
	72.8	277	1.5	19.24		**B5/B14**

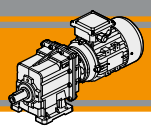

Dati tecnici

Technical data

P_1 [kW]	n_2 [min^{-1}]	M_2 [Nm]	sf	i		IEC
2.2						
100LA4 (1400 min^{-1})	**56.0**	360	1.4	24.99	**CMG042**	**B5/B14**
	45.8	440	1.1	30.57		**B5/B14**
	40.8	494	1.0	34.30		**B5/B14**
	36.2	557	0.9	38.63		**B5/B14**
3						
100LB4 (1400 min^{-1})	**374**	74	2.0	3.74	**CMG032**	**B5/B14**
	311	88	1.7	4.50		**B5/B14**
	255	108	1.4	5.48		**B5/B14**
	222	124	1.5	6.31		**B5/B14**
	177	156	1.2	7.93		**B5/B14**
	154	178	1.0	9.08		**B5/B14**
	128	215	0.8	10.93		**B5/B14**
	111	248	1.0	12.60		**B5/B14**
	105	261	1.0	13.30		**B5/B14**
	91.5	301	0.9	15.30		**B5/B14**
	374	74	3.1	3.74	**CMG042**	**B5/B14**
	311	88	2.6	4.50		**B5/B14**
	255	108	2.1	5.48		**B5/B14**
	222	124	2.1	6.31		**B5/B14**
	177	156	1.7	7.93		**B5/B14**
	154	178	1.6	9.08		**B5/B14**
	128	215	1.3	10.93		**B5/B14**
	111	248	1.4	12.60		**B5/B14**
	105	261	1.3	13.30		**B5/B14**
	92	301	1.4	15.30		**B5/B14**
	77	358	1.2	18.21		**B5/B14**
	73	378	1.1	19.24		**B5/B14**
	56	491	1.0	24.99		**B5/B14**
	46	601	0.8	30.57		**B5/B14**

P_1 [kW]	n_2 [min^{-1}]	M_2 [Nm]	sf	i		IEC
4						
112M4 (1400 min^{-1})	**374**	98	1.5	3.74	**CMG032**	**B5/B14**
	311	118	1.3	4.50		**B5/B14**
	255	144	1.0	5.48		**B5/B14**
	222	165	1.1	6.31		**B5/B14**
	177	208	0.9	7.93		**B5/B14**
	374	98	2.3	3.74	**CMG042**	**B5/B14**
	311	118	1.9	4.50		**B5/B14**
	255	144	1.6	5.48		**B5/B14**
	222	165	1.6	6.31		**B5/B14**
	177	208	1.3	7.93		**B5/B14**
	154	238	1.2	9.08		**B5/B14**
	128	286	1.0	10.93		**B5/B14**
	111	330	1.1	12.60		**B5/B14**
	105	348	1.0	13.30		**B5/B14**
	91.5	401	1.0	15.30		**B5/B14**
	76.9	477	0.9	18.21		**B5/B14**
	72.8	504	0.8	19.24		**B5/B14**
	56.0	655	0.8	24.99		**B5/B14**

Dimensioni ***Dimensions***

CMG 002 U

CMG 002 U

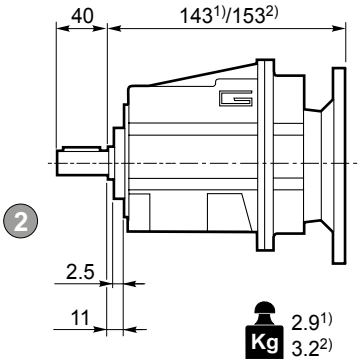

CMGIS 002 U

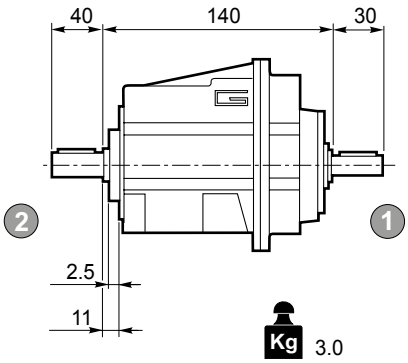

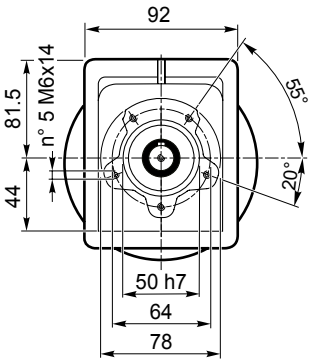

[1)]IEC 63/71, [2)]IEC 80

Flangia entrata
Input flange

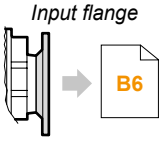

Albero uscita
Output shaft
2

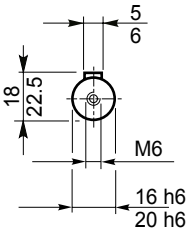

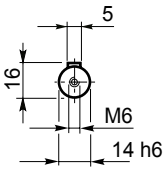

Albero entrata
Input shaft
1

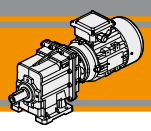

Dimensioni ***Dimensions***

CMG 002 H..

CMG 002 H..

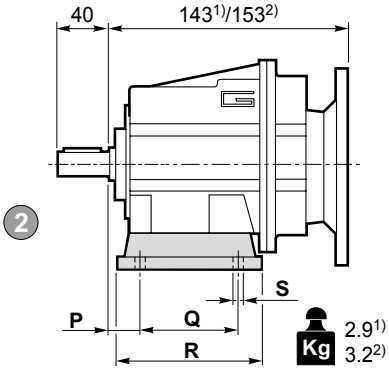

CMGIS 002 H..

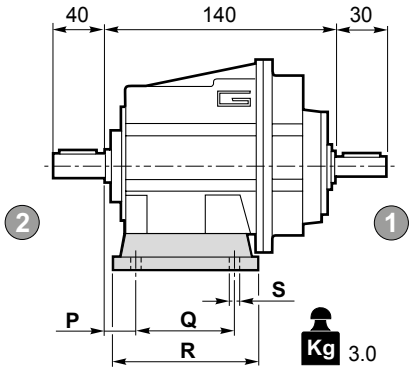

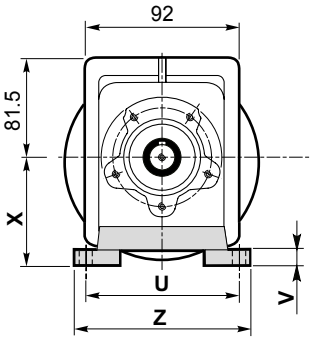

[1]IEC 63/71, [2]IEC 80

Flangia entrata
Input flange

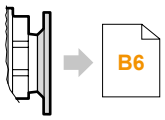

Albero uscita
Output shaft
2

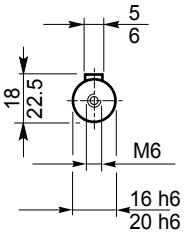

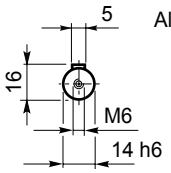

Albero entrata
Input shaft
1

Versione **H** / ***H** Version*										
CMG CMGIS	**P**	**Q**	**R**	**S**	**U**	**V**	**X**	**Z**	**Piede / *Foot***	
									Tipo / *Type*	Peso / *Weight* [kg]
002	**18**	**60**	**80**	**9**	**100**	**10**	**60**	**120**	**H60**	**0.2**
	18	80	104	9	110 - 120	10	75	145	H75	0.3
	18	50 - 87	110	9	110	10	85	135	H85	0.4

Preferenziale / *Preferred*

Dimensioni ***Dimensions***

CMG 002 F..

CMG 002 F..

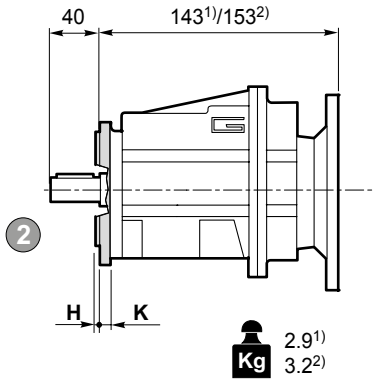

CMGIS 002 F..

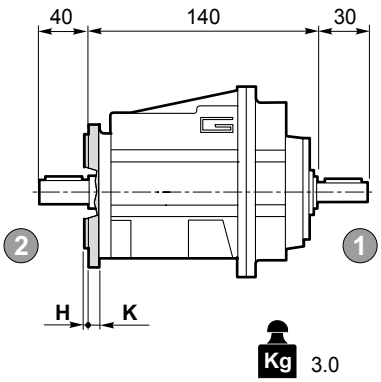

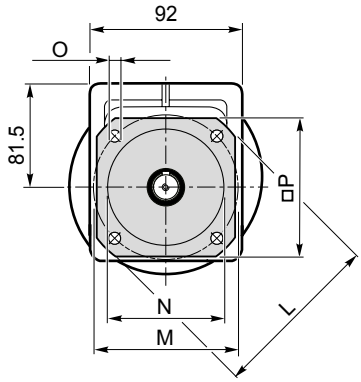

[1)]IEC 63/71, [2)]IEC 80

Flangia entrata
Input flange

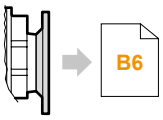

Albero uscita
Output shaft
2

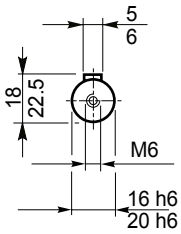

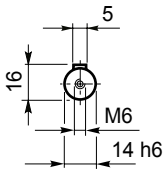

Albero entrata
Input shaft
1

Versione **F** / ***F Version***									
CMG CMGIS	**H**	**K**	**L**	**M**	**N** f7	**O**	**P**	**Flangia / *Flange***	
								Tipo / *Type*	Peso / *Weight* [kg]
002	3.5	7	105	85	70	6.5	90	**F105**	0.1
	3.5	8	120	100	80	9	100	**F120**	0.2
	3.5	8	140	115	95	9	115	**F140**	0.2

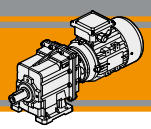

Dimensioni ***Dimensions***

CMG 002 H../F..

CMG 002 H../F..

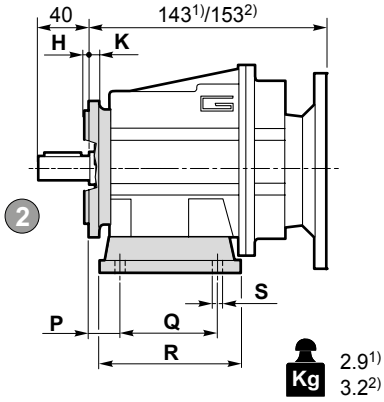

CMGIS 002 H../F..

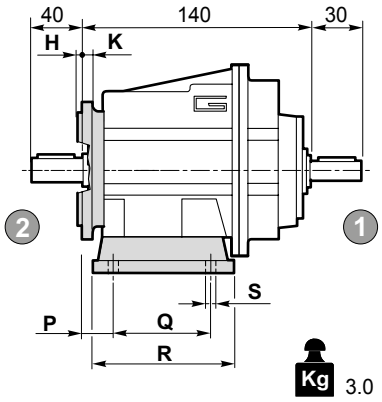

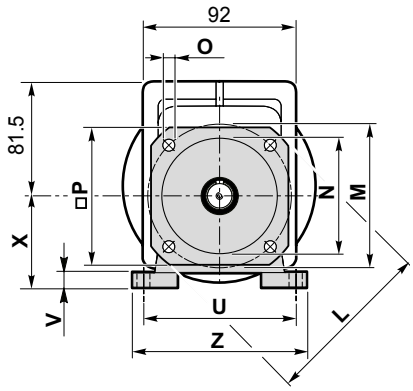

[1]IEC 63/71, [2]IEC 80

Flangia entrata
Input flange

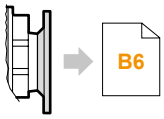

Albero uscita
Output shaft
2

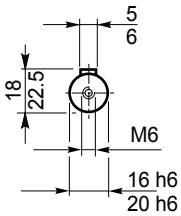

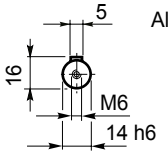

Albero entrata
Input shaft
1

CMG CMGIS	P	Q	R	S	U	V	X	Z	Piede / *Foot* Tipo *Type*	Piede / *Foot* Peso / *Weight* [kg]	Combinazioni possibili H/F *Possible combinations H/F* F105	F120	F140
	Versione **H** / ***H*** Version												
002	**18**	**60**	**80**	**9**	**100**	**10**	**60**	**120**	**H60**	**0.2**	●	●	●
	18	80	104	9	110 - 120	10	75	145	**H75**	0.3	●	●	●
	18	50 - 87	110	9	110	10	85	135	**H85**	0.4	●	●	●

Preferenziale / *Preferred*

● Combinazioni possibili H/F / *Possible combinations H/F*

CMG CMGIS	H	K	L	M	N f7	O	P	Flangia / *Flange* Tipo / *Type*	Flangia / *Flange* Peso / *Weight* [kg]
	Versione **F** / ***F*** *Version*								
002	3.5	7	105	85	70	6.5	90	**F105**	0.1
	3.5	8	120	100	80	9	100	**F120**	0.2
	3.5	8	140	115	95	9	115	**F140**	0.2

Dimensioni ***Dimensions***

CMG 012 U - CMG 013 U

CMG 012 U

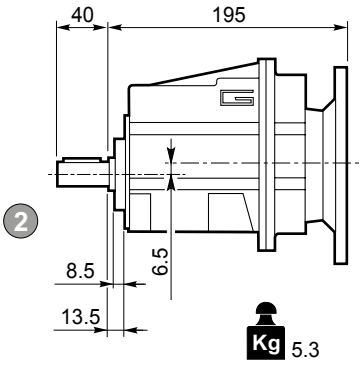

CMGIS 012 U

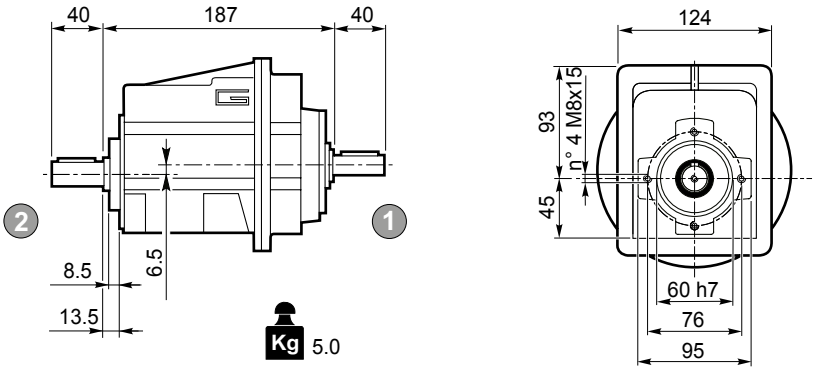

Flangia entrata
Input flange

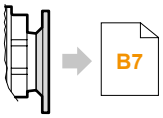

Albero uscita
Output shaft
2

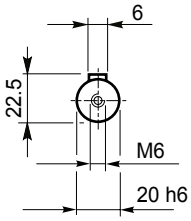

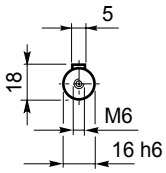

Albero entrata
Input shaft
1

CMG 013 U

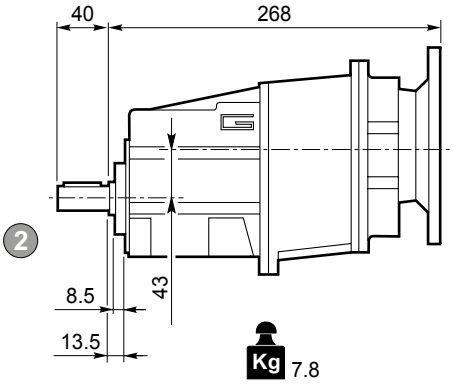

CMGIS 013 U

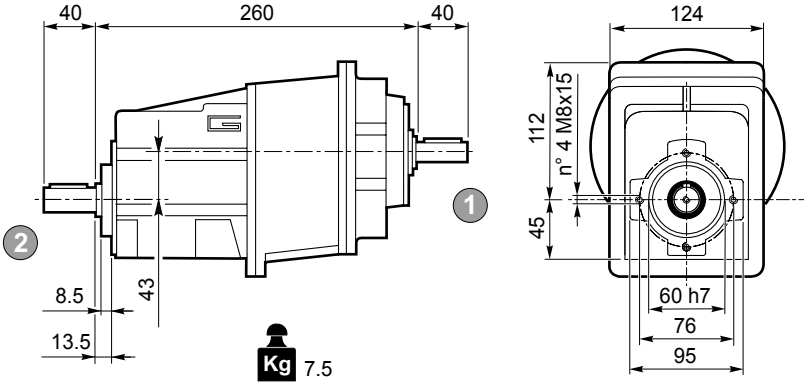

Flangia entrata
Input flange

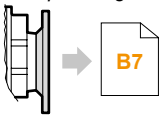

Albero uscita
Output shaft
2

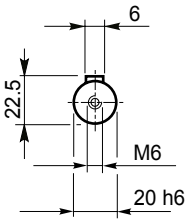

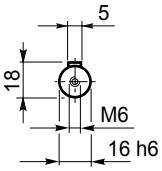

Albero entrata
Input shaft
1

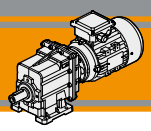

Dimensioni ***Dimensions***

CMG 012 H.. - CMG 013 H..

CMG 012 H..

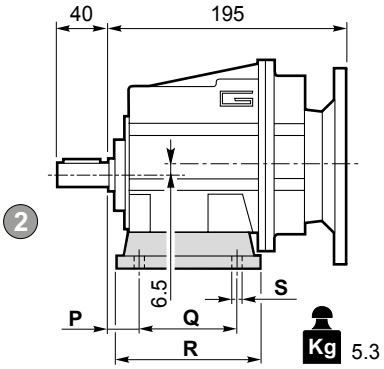

CMGIS 012 H..

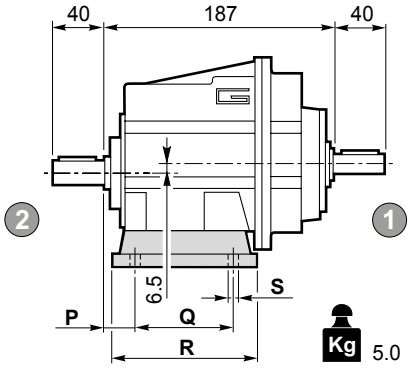

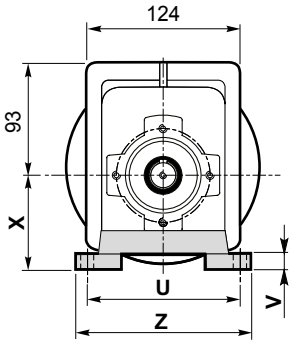

Flangia entrata
Input flange

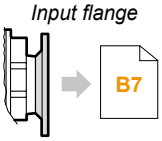

Albero uscita
Output shaft
2

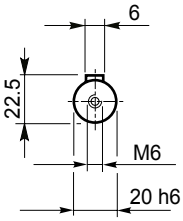

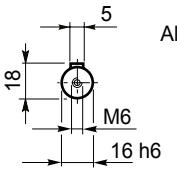

Albero entrata
Input shaft
1

CMG 013 H..

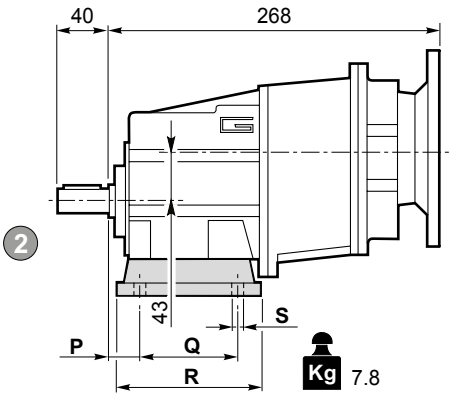

CMGIS 013 H..

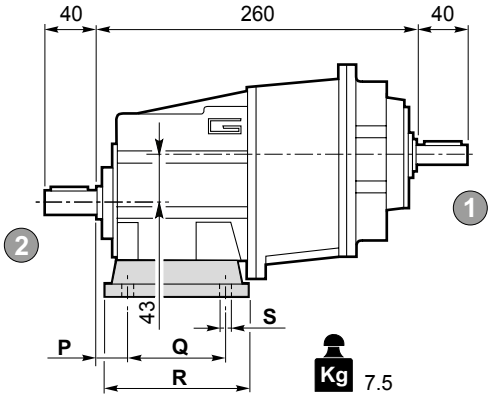

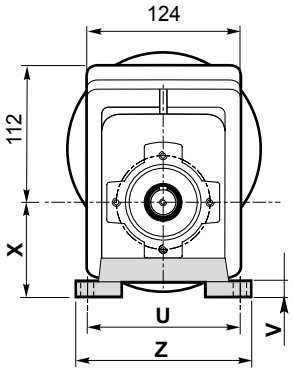

Flangia entrata
Input flange

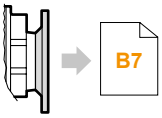

Albero uscita
Output shaft
2

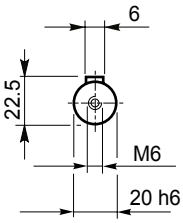

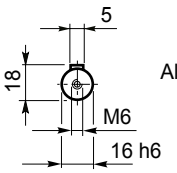

Albero entrata
Input shaft
1

Versione **H** / ***H*** *Version*										
CMG CMGIS	**P**	**Q**	**R**	**S**	**U**	**V**	**X**	**Z**	**Piede / *Foot***	
									Tipo / *Type*	Peso / *Weight* [kg]
012 013	**20**	**85**	**108**	**9**	**115**	**12**	**65**	**139**	**H65**	**0.7**
	18	80	118	9	110	12	75	140	**H75**	1.0
	25	85	120	9	120	12	80	140	**H80**	1.1
	18	50 - 87	118	9	110	12	85	130	**H85**	1.2
	25	130	154	9	110	12	90	135	**H90**	1.5
	18	60 - 107.5	135	11	130	12	100	155	**H100**	1.7

Preferenziale / *Preferred*

Dimensioni ***Dimensions***

CMG 012 F.. - CMG 013 F..

CMG 012 F..

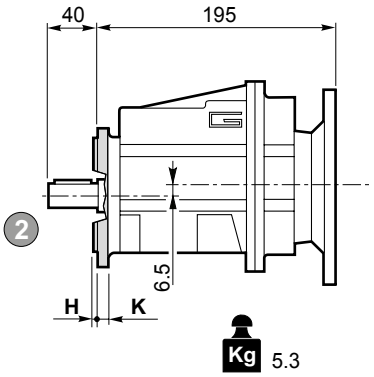

CMGIS 012 F..

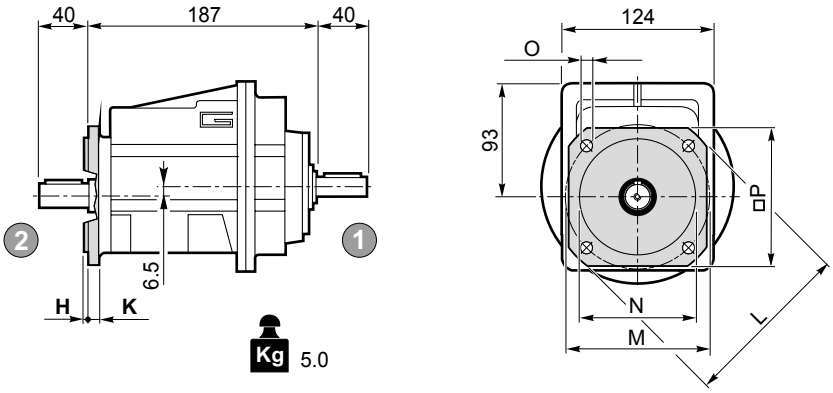

Flangia entrata
Input flange

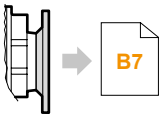

Albero uscita
Output shaft
2

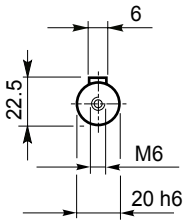

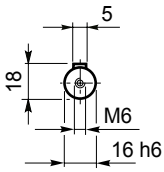

Albero entrata
Input shaft
1

CMG 013 F..

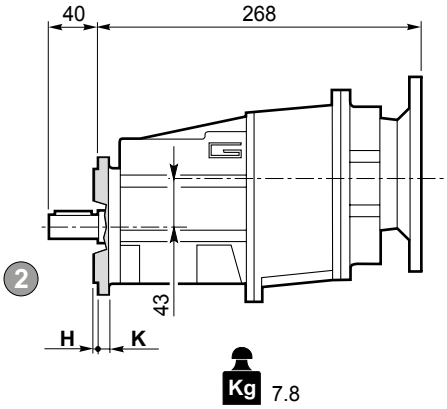

CMGIS 013 F..

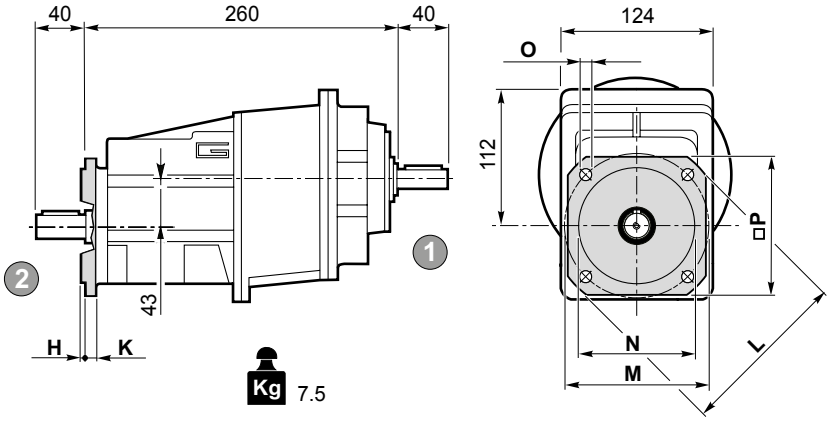

Flangia entrata
Input flange

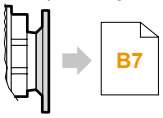

Albero uscita
Output shaft
2

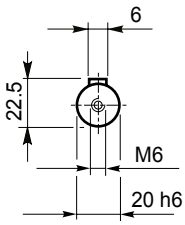

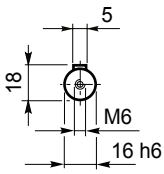

Albero entrata
Input shaft
1

Versione **F** / ***F Version***									
CMG CMGIS	**H**	**K**	**L**	**M**	**N** f7	**O**	**P**	**Flangia / *Flange***	
								Tipo / *Type*	Peso / *Weight* [kg]
012 013	3	9	120	100	80	9	106	**F120**	0.5
	3.5	9	140	115	95	9	115	**F140**	0.8
	3.5	9	160	130	110	9	126	**F160**	1.1
	3.5	11	200	165	130	11	165	**F200**	1.8

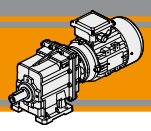

CMG 012 H../F.. - CMG 013 H../F..

CMG 012 H../F..

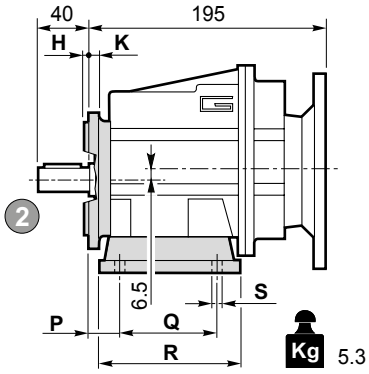

CMGIS 012 H../F..

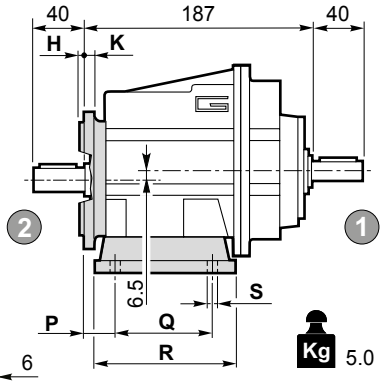

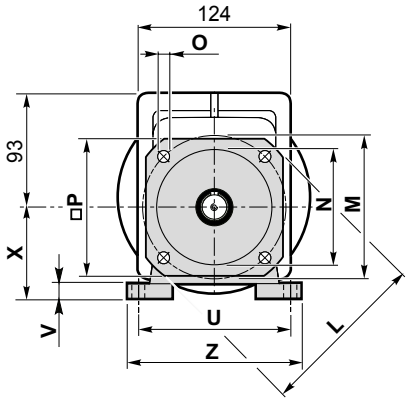

Flangia entrata
Input flange

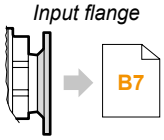

Albero uscita
Output shaft
2

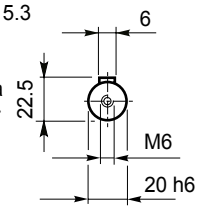

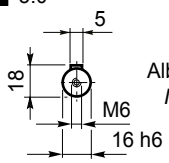

Albero entrata
Input shaft
1

CMG 013 H../F..

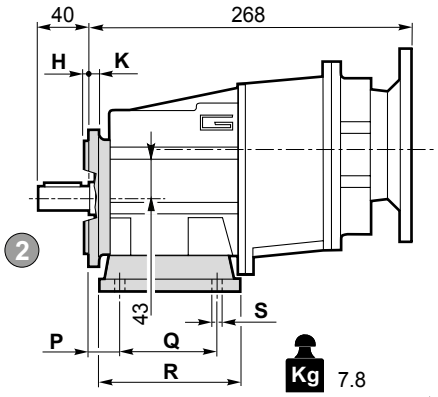

CMGIS 013 H../F..

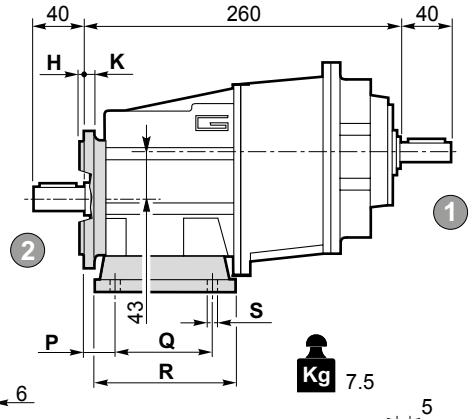

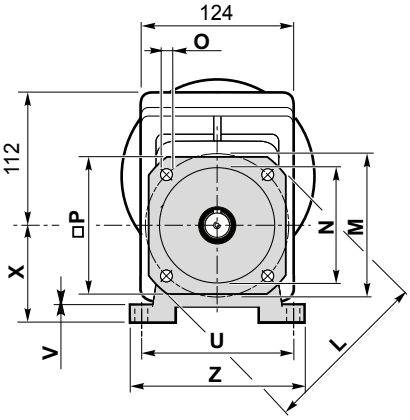

Flangia entrata
Input flange

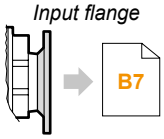

Albero uscita
Output shaft
2

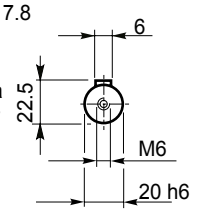

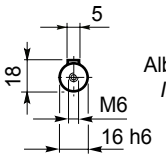

Albero entrata
Input shaft
1

Versione **H** / ***H*** Version											Combinazioni possibili H/F *Possible combinations H/F*			
CMG CMGIS	**P**	**Q**	**R**	**S**	**U**	**V**	**X**	**Z**	**Piede / *Foot*** Tipo *Type*	Peso / *Weight* [kg]	**F120**	**F140**	**F160**	**F200**
012 013	**20**	**85**	**108**	**9**	**115**	**12**	**65**	**139**	**H65**	**0.7**	•	•		
	18	80	118	9	110	12	75	140	**H75**	1.0	•	•	•	
	25	85	120	9	120	12	80	140	**H80**	1.1	•	•	•	
	18	50 - 87	118	9	110	12	85	130	**H85**	1.2	•	•	•	
	25	130	154	9	110	12	90	135	**H90**	1.5	•	•	•	•
	18	60 - 107.5	135	11	130	12	100	155	**H100**	1.7	•	•	•	•

Preferenziale / *Preferred*

• Combinazioni possibili H/F / *Possible combinations H/F*

Versione **F** / ***F*** *Version*									
CMG CMGIS	**H**	**K**	**L**	**M**	**N** f7	**O**	**P**	**Flangia / *Flange*** Tipo / *Type*	Peso / *Weight* [kg]
012 013	3	9	120	100	80	9	106	**F120**	0.5
	3.5	9	140	115	95	9	115	**F140**	0.8
	3.5	9	160	130	110	9	126	**F160**	1.1
	3.5	11	200	165	130	11	165	**F200**	1.8

Dimensioni ***Dimensions***

CMG 022 U - CMG 023 U

CMG 022 U

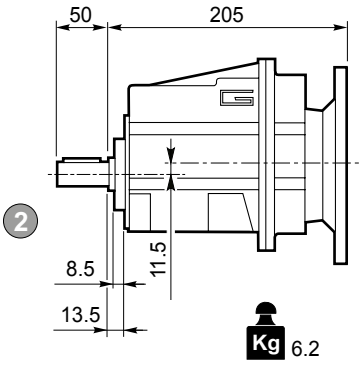

CMGIS 022 U

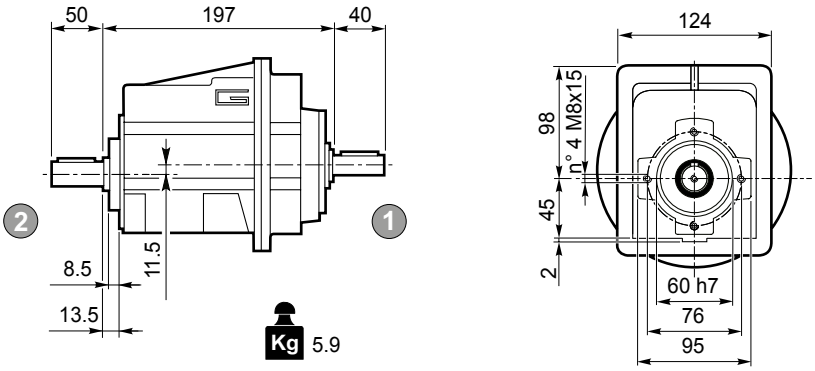

Flangia entrata
Input flange

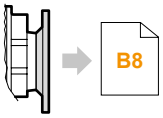

Albero uscita
Output shaft
2

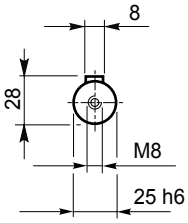

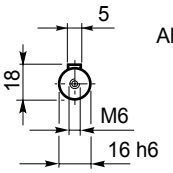

Albero entrata
Input shaft
1

CMG 023 U

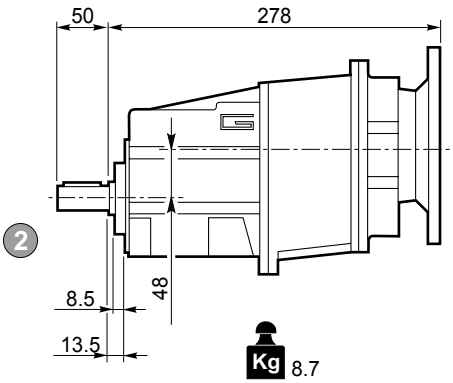

CMGIS 023 U

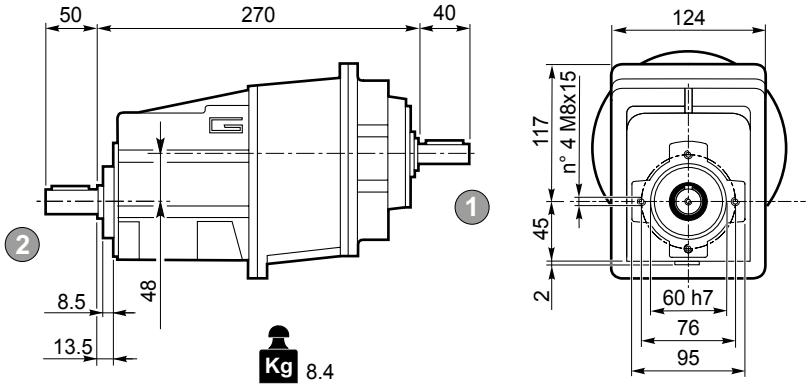

Flangia entrata
Input flange

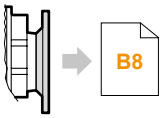

Albero uscita
Output shaft
2

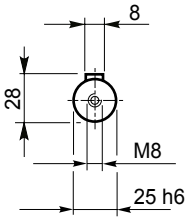

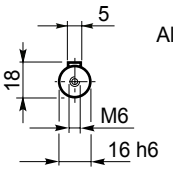

Albero entrata
Input shaft
1

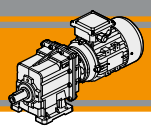

Dimensioni ***Dimensions***

CMG 022 H.. - CMG 023 H..

CMG 022 H..

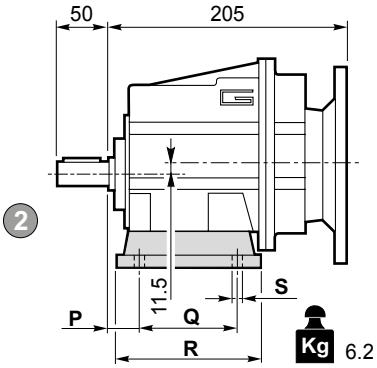

CMGIS 022 H..

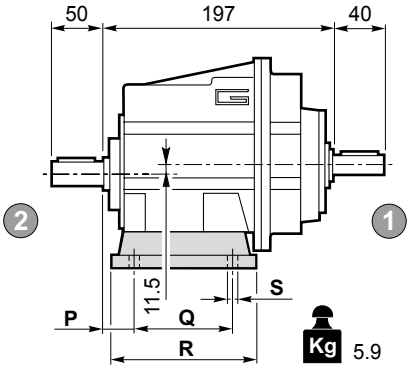

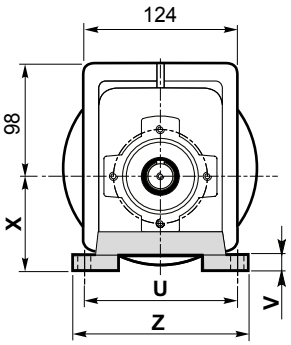

Flangia entrata
Input flange

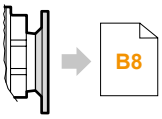

Albero uscita
Output shaft
2

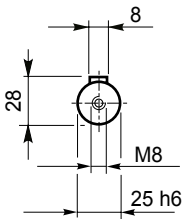

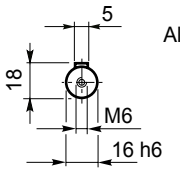

Albero entrata
Input shaft
1

CMG 023 H..

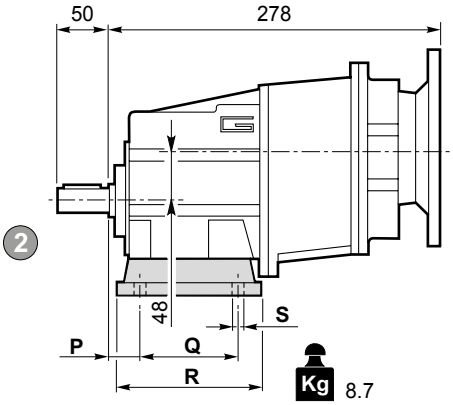

CMGIS 023 H..

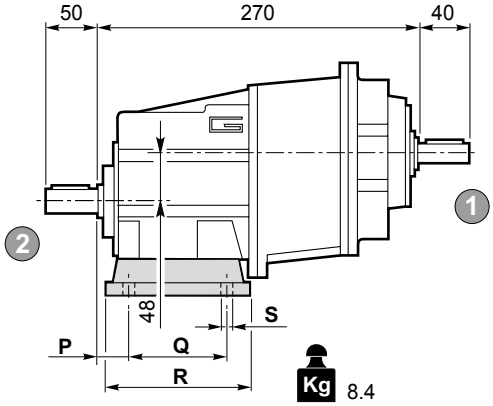

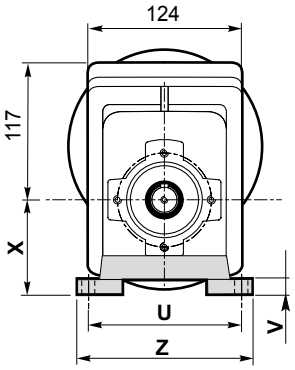

Flangia entrata
Input flange

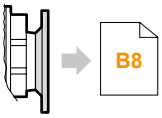

Albero uscita
Output shaft
2

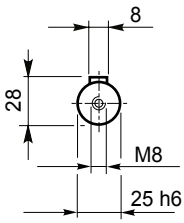

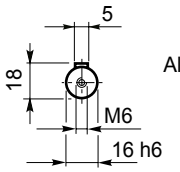

Albero entrata
Input shaft
1

Versione **H** / ***H*** *Version*										
CMG CMGIS	**P**	**Q**	**R**	**S**	**U**	**V**	**X**	**Z**	**Piede / *Foot***	
									Tipo / *Type*	Peso / *Weight* [kg]
022 023	**20**	**85**	**108**	**9**	**115**	**12**	**65**	**139**	**H65**	**0.7**
	18	80	118	9	110	12	75	140	**H75**	1.0
	25	85	120	9	120	12	80	140	**H80**	1.1
	18	50 - 87	118	9	110	12	85	130	**H85**	1.2
	25	130	154	9	110	12	90	135	**H90**	1.5
	18	60 - 107.5	135	11	130	12	100	155	**H100**	1.7

Preferenziale / *Preferred*

Dimensioni *Dimensions*

CMG 022 F.. - CMG 023 F..

CMG 022 F..

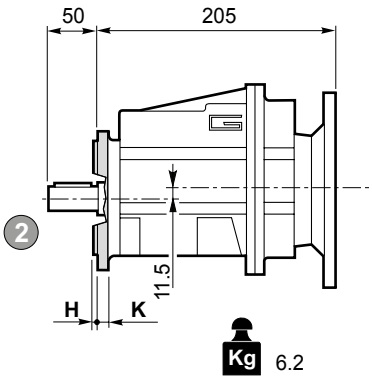

CMGIS 022 F..

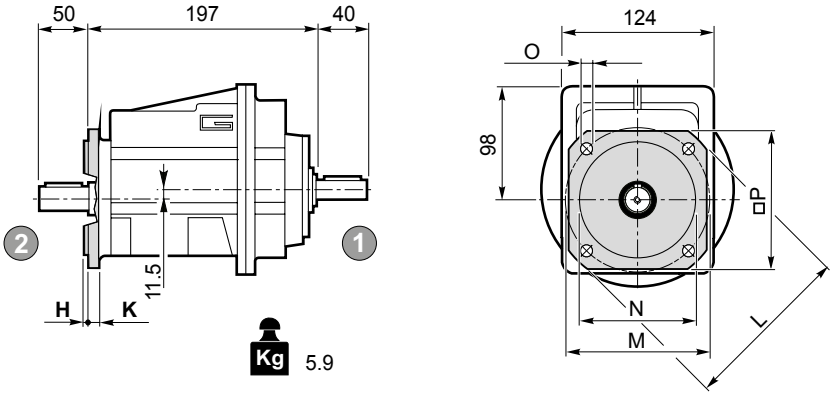

Flangia entrata
Input flange

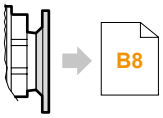

Albero uscita
Output shaft
2

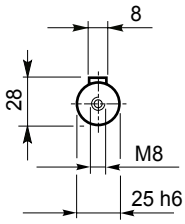

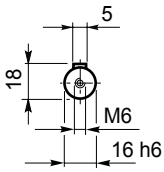

Albero entrata
Input shaft
1

CMG 023 F..

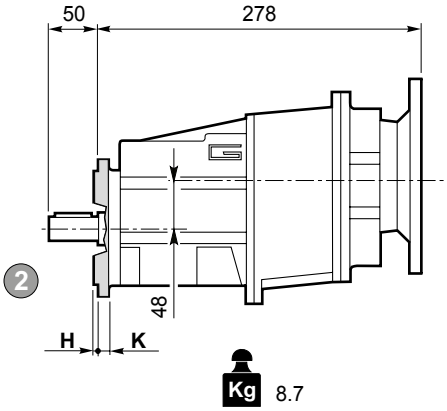

CMGIS 023 F..

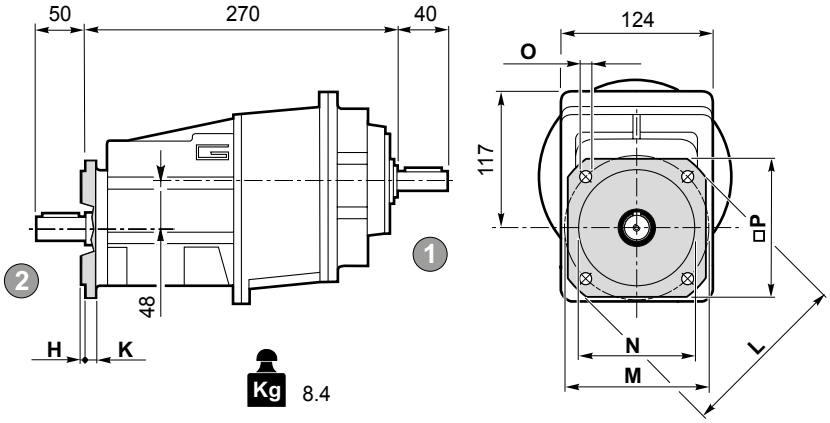

Flangia entrata
Input flange

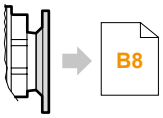

Albero uscita
Output shaft
2

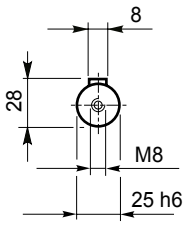

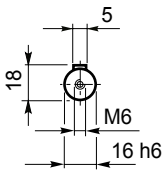

Albero entrata
Input shaft
1

Versione **F** / ***F** Version*									
CMG CMGIS	**H**	**K**	**L**	**M**	**N** f7	**O**	**P**	**Flangia / *Flange***	
								Tipo / *Type*	Peso / *Weight* [kg]
022 023	3	9	120	100	80	9	106	**F120**	0.5
	3.5	9	140	115	95	9	115	**F140**	0.8
	3.5	9	160	130	110	9	126	**F160**	1.1
	3.5	11	200	165	130	11	165	**F200**	1.8

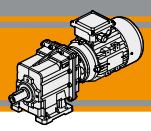

CMG 022 H../F.. - CMG 023 H../F..

CMG 022 H../F..

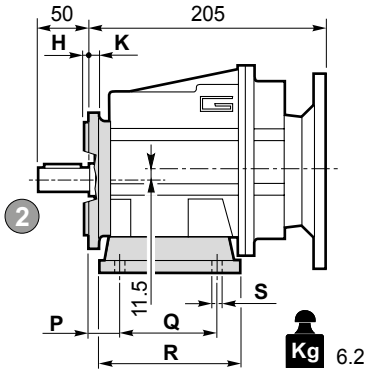

CMGIS 022 H../F..

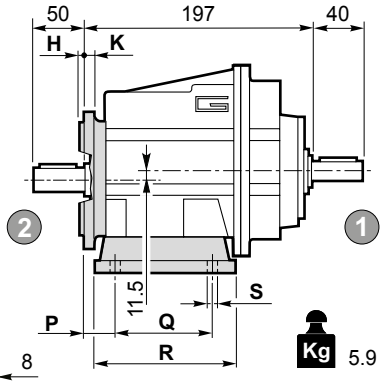

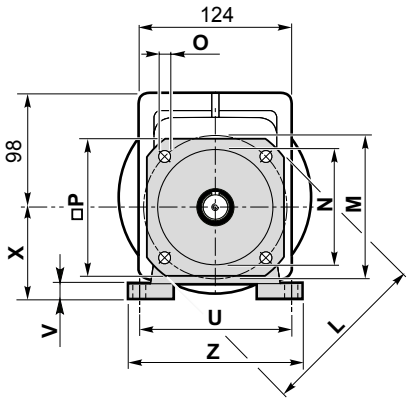

Flangia entrata
Input flange

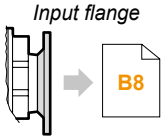

Albero uscita
Output shaft
2

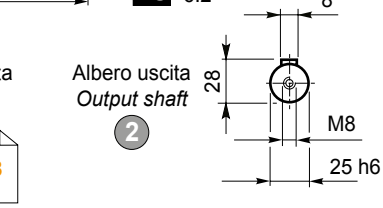

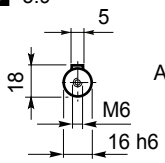

Albero entrata
Input shaft
1

CMG 023 H../F..

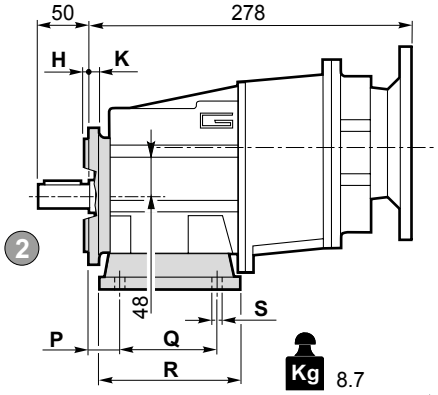

CMGIS 023 H../F..

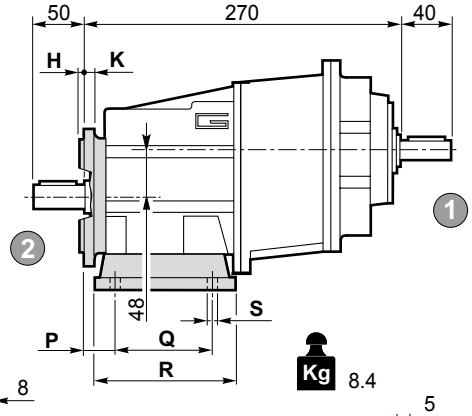

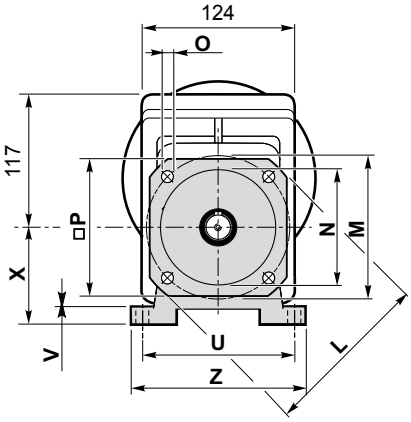

Flangia entrata
Input flange

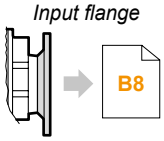

Albero uscita
Output shaft
2

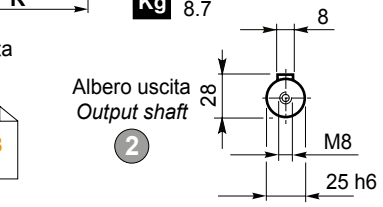

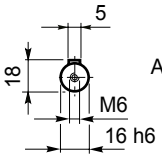

Albero entrata
Input shaft
1

Versione **H** / ***H*** Version											Combinazioni possibili H/F *Possible combinations H/F*			
CMG CMGIS	**P**	**Q**	**R**	**S**	**U**	**V**	**X**	**Z**	**Piede / *Foot*** Tipo *Type*	Peso / *Weight* [kg]	**F120**	**F140**	**F160**	**F200**
022 023	**20**	**85**	**108**	**9**	**115**	**12**	**65**	**139**	**H65**	**0.7**	•	•		
	18	80	118	9	110	12	75	140	**H75**	1.0	•	•	•	
	25	85	120	9	120	12	80	140	**H80**	1.1	•	•	•	
	18	50 - 87	118	9	110	12	85	130	**H85**	1.2	•	•	•	
	25	130	154	9	110	12	90	135	**H90**	1.5	•	•	•	•
	18	60 - 107.5	135	11	130	12	100	155	**H100**	1.7	•	•	•	•

Preferenziale / *Preferred*

• Combinazioni possibili H/F / *Possible combinations H/F*

Versione **F** / ***F*** *Version*									
CMG CMGIS	**H**	**K**	**L**	**M**	**N** f7	**O**	**P**	**Flangia / *Flange*** Tipo / *Type*	Peso / *Weight* [kg]
022 023	3	9	120	100	80	9	106	**F120**	0.5
	3.5	9	140	115	95	9	115	**F140**	0.8
	3.5	9	160	130	110	9	126	**F160**	1.1
	3.5	11	200	165	130	11	165	**F200**	1.8

Dimensioni ***Dimensions***

CMG 032 U - CMG 033 U

CMG 032 U

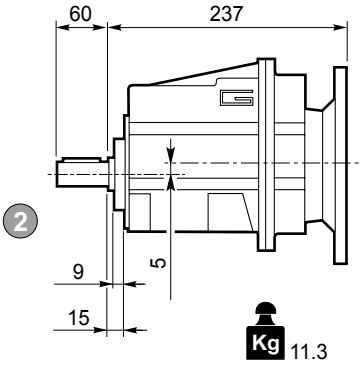

CMGIS 032 U

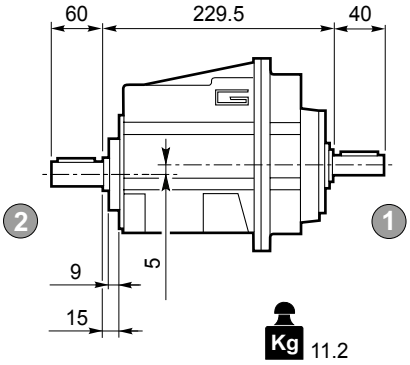

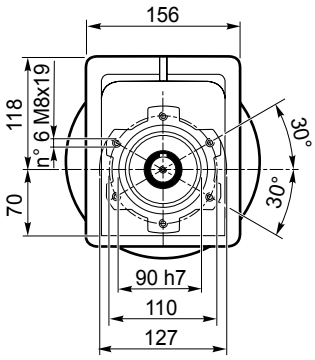

Flangia entrata
Input flange

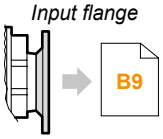

Albero uscita
Output shaft
2

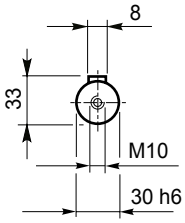

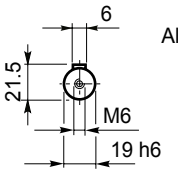

Albero entrata
Input shaft
1

CMG 033 U

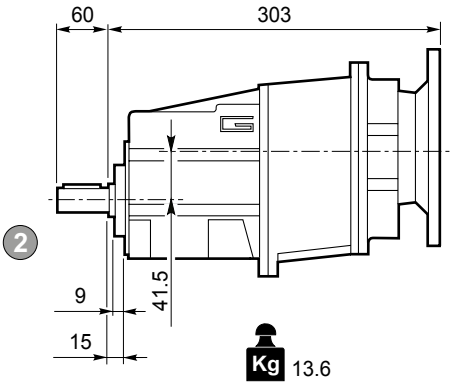

CMGIS 033 U

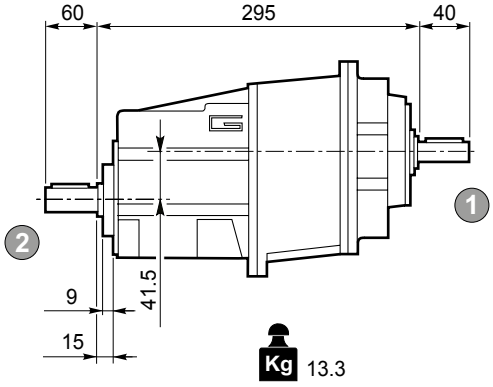

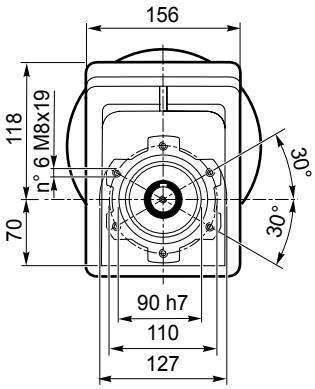

Flangia entrata
Input flange

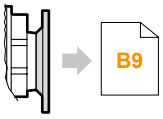

Albero uscita
Output shaft
2

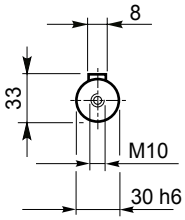

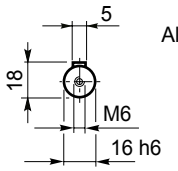

Albero entrata
Input shaft
1

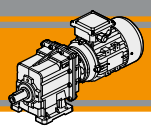

Dimensioni ***Dimensions***

CMG 032 H.. - CMG 033 H..

CMG 032 H..

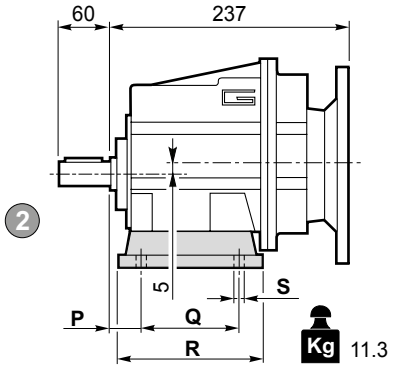

CMGIS 032 H..

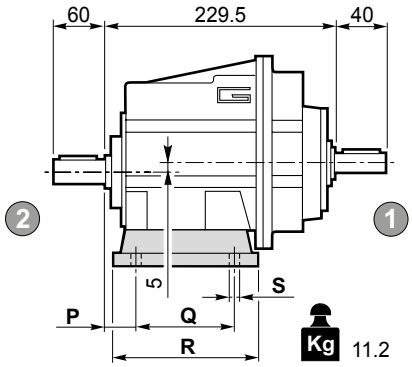

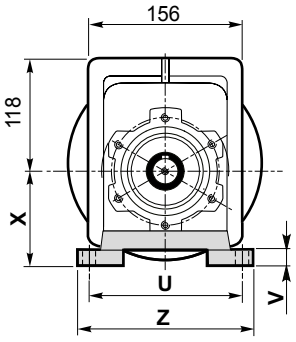

Flangia entrata
Input flange

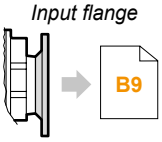

Albero uscita
Output shaft
2

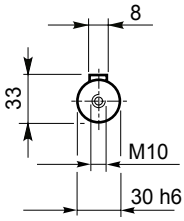

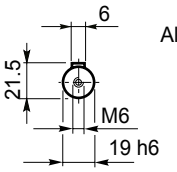

Albero entrata
Input shaft
1

CMG 033 H..

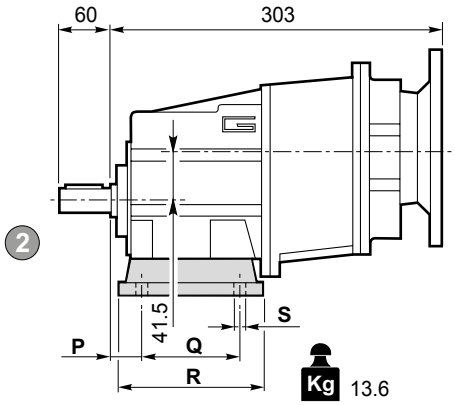

CMGIS 033 H..

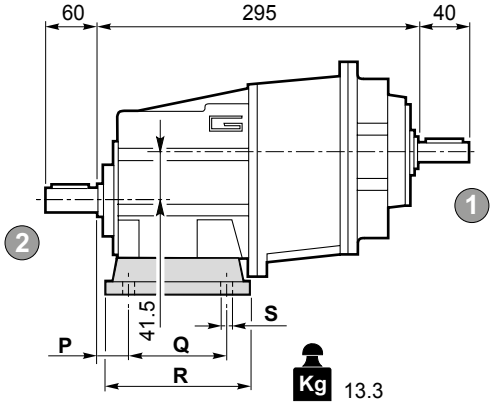

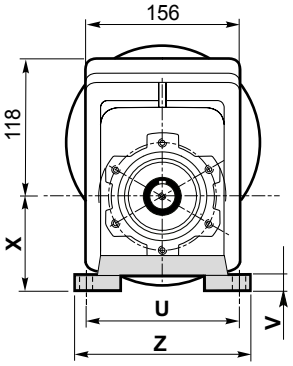

Flangia entrata
Input flange

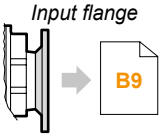

Albero uscita
Output shaft
2

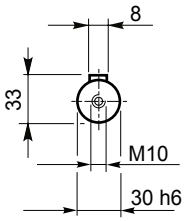

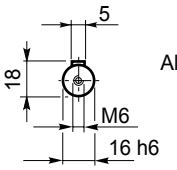

Albero entrata
Input shaft
1

Versione **H** / ***H Version***										
CMG CMGIS	**P**	**Q**	**R**	**S**	**U**	**V**	**X**	**Z**	**Piede / *Foot***	
									Tipo / *Type*	Peso / *Weight* [kg]
032 033	**30**	**105**	**136**	**14**	**160**	**14**	**95**	**194**	**H95**	**1.5**
	30	100	150	11	150	14	110	185	**H110**	1.9
	18	70			160					
	30	165	195	14	135	14	115	170	**H115**	2.2
	35	110	160	14	170	14	120	210	**H120**	2.6
	19.5	149.5	184	14	180	18	130	214	**H130**	2.9

Preferenziale / *Preferred*

Dimensioni *Dimensions*

CMG 032 F.. - CMG 033 F..

CMG 032 F..

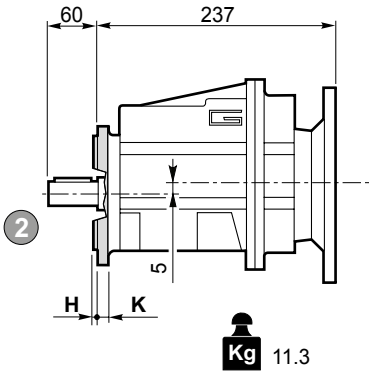

CMGIS 032 F..

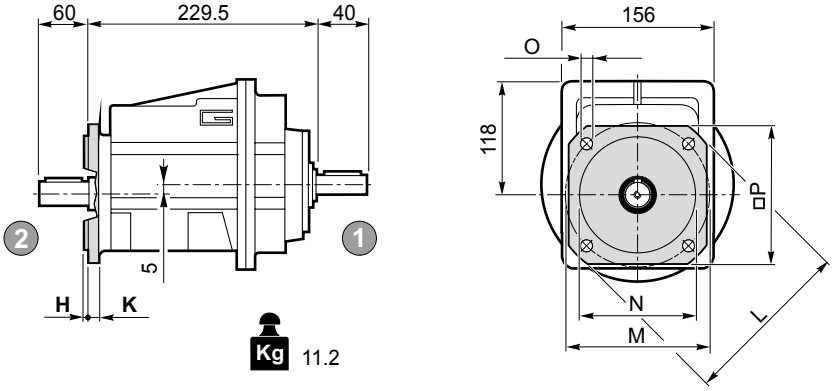

Flangia entrata
Input flange

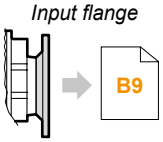

Albero uscita
Output shaft
2

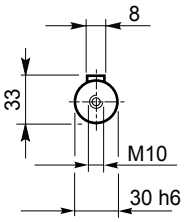

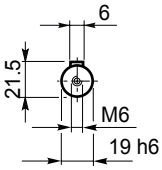

Albero entrata
Input shaft
1

CMG 033 F..

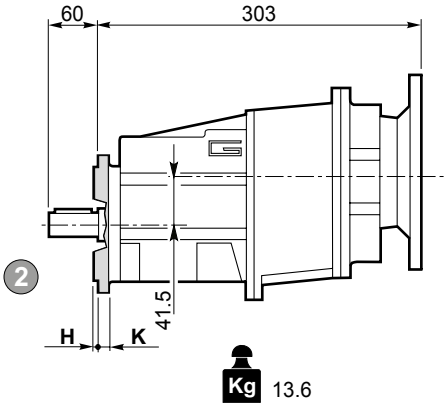

CMGIS 033 F..

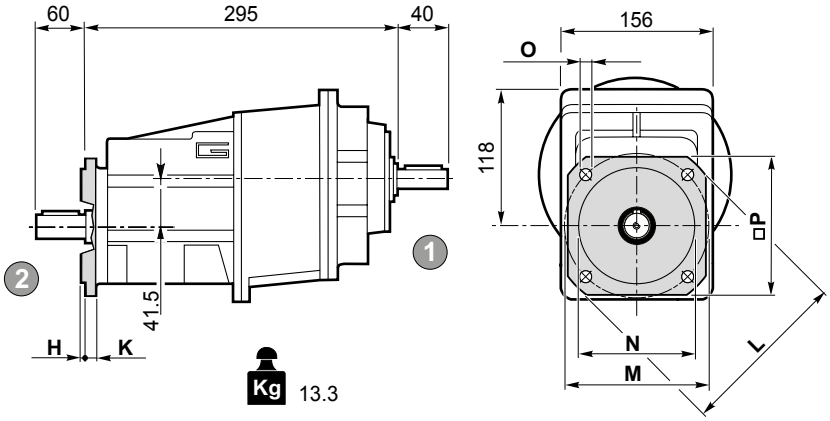

Flangia entrata
Input flange

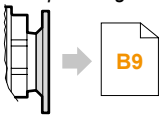

Albero uscita
Output shaft
2

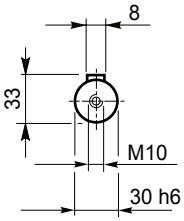

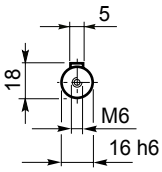

Albero entrata
Input shaft
1

Versione **F** / ***F Version***									
CMG CMGIS	**H**	**K**	**L**	**M**	**N** f7	**O**	**P**	**Flangia / *Flange***	
								Tipo / *Type*	Peso / *Weight* [kg]
032 033	3.5	11	160	130	110	9	140	**F160**	1.0
	3.5	11	200	165	130	11	165	**F200**	1.8
	4	13	250	215	180	14	215	**F250**	2.9

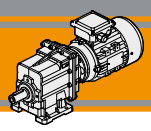

CMG 032 H../F.. - CMG 033 H../F..

CMG 032 H../F..

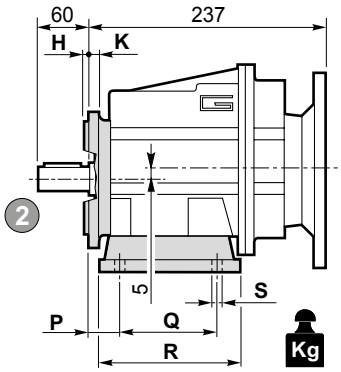

Kg 11.3

CMGIS 032 H../F..

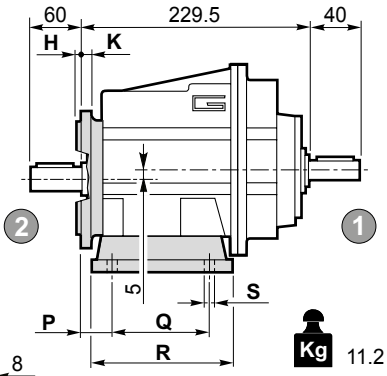

Kg 11.2

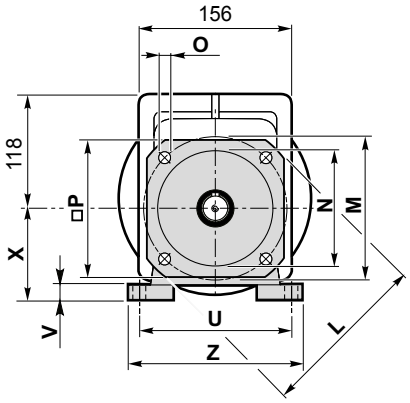

Flangia entrata
Input flange

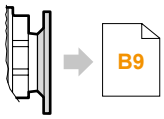

Albero uscita
Output shaft
2

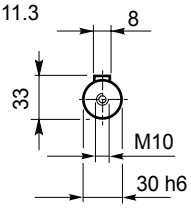

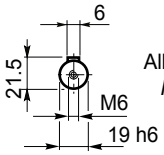

Albero entrata
Input shaft
1

CMG 033 H../F..

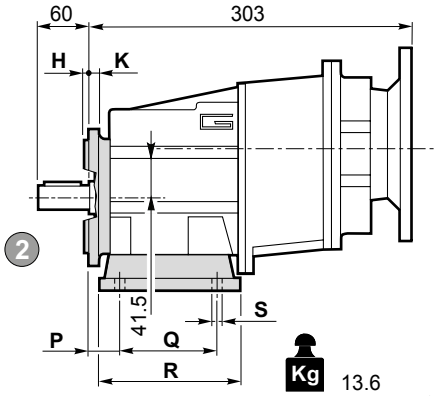

Kg 13.6

CMGIS 033 H../F..

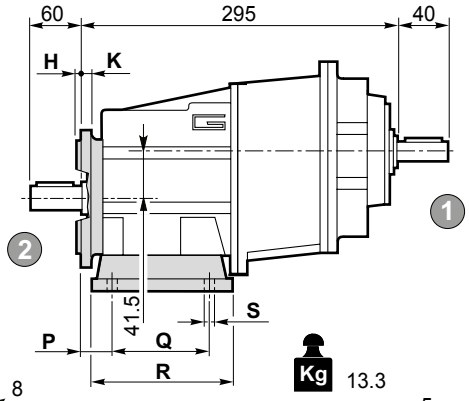

Kg 13.3

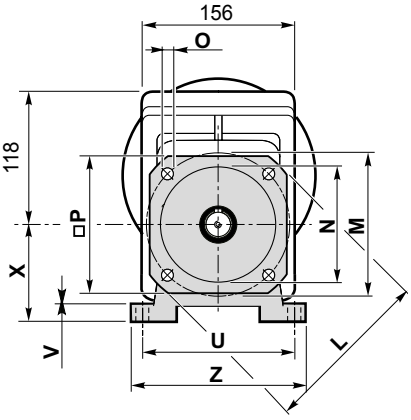

Flangia entrata
Input flange

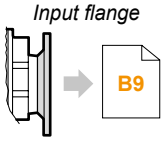

Albero uscita
Output shaft
2

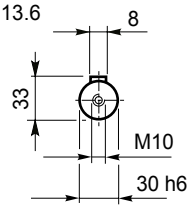

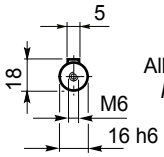

Albero entrata
Input shaft
1

Versione **H** / ***H*** Version											Combinazioni possibili H/F *Possible combinations H/F*		
CMG CMGIS	**P**	**Q**	**R**	**S**	**U**	**V**	**X**	**Z**	**Piede / *Foot*** Tipo *Type*	Peso / *Weight* [kg]	**F160**	**F200**	**F250**
032 033	**30**	**105**	**136**	**14**	**160**	**14**	**95**	**194**	**H95**	**1.5**	•	•	
	30	100	150	11	150	14	110	185	**H110**	1.9	•	•	
	18	70			160								
	30	165	195	14	135	14	115	170	**H115**	2.2	•	•	•
	35	110	160	14	170	14	120	210	**H120**	2.6	•	•	•
	19.5	149.5	184	14	180	18	130	214	**H130**	2.9	•	•	•

Preferenziale / *Preferred*

• Combinazioni possibili H/F / *Possible combinations H/F*

Versione **F** / ***F*** *Version*									
CMG CMGIS	**H**	**K**	**L**	**M**	**N** f7	**O**	**P**	**Flangia / *Flange*** Tipo / *Type*	Peso / *Weight* [kg]
032 033	3.5	11	160	130	110	9	140	**F160**	1.0
	3.5	11	200	165	130	11	165	**F200**	1.8
	4	13	250	215	180	14	215	**F250**	2.9

Dimensioni ***Dimensions***

CMG 042 U - CMG 043 U

CMG 042 U

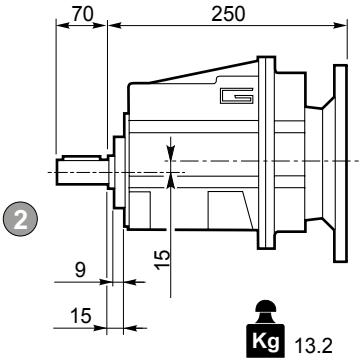

CMGIS 042 U

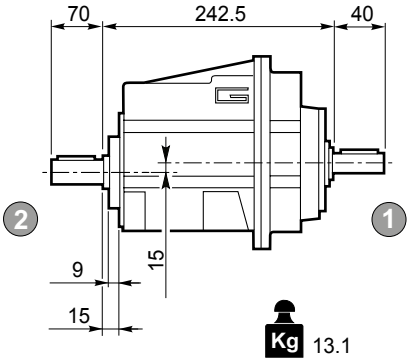

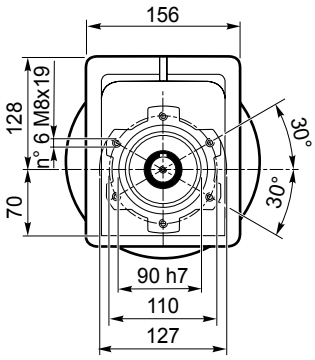

Flangia entrata
Input flange

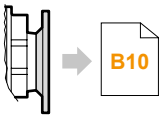

Albero uscita
Output shaft
2

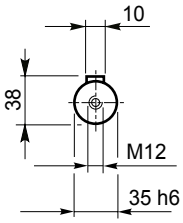

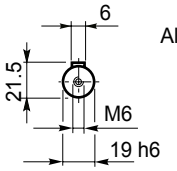

Albero entrata
Input shaft
1

CMG 043 U

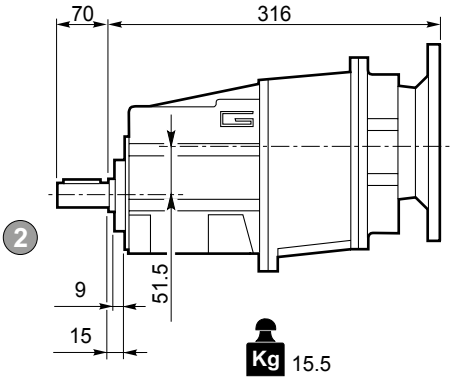

CMGIS 043 U

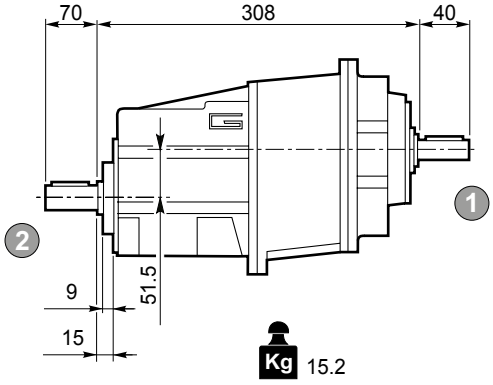

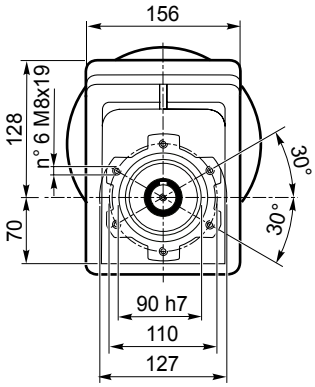

Flangia entrata
Input flange

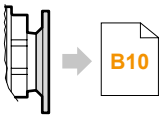

Albero uscita
Output shaft
2

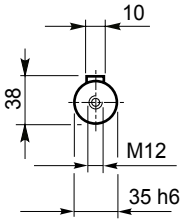

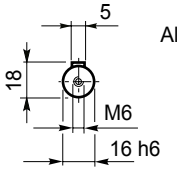

Albero entrata
Input shaft
1

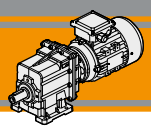

CMG 042 H.. - CMG 043 H..

CMG 042 H..

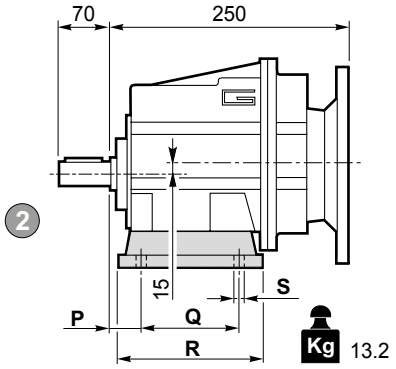

CMGIS 042 H..

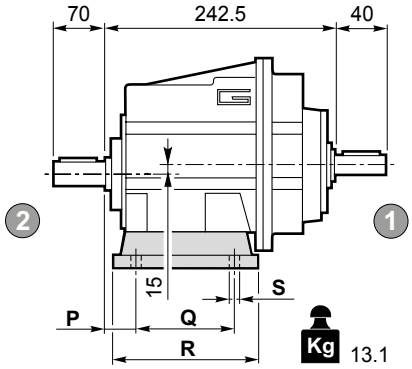

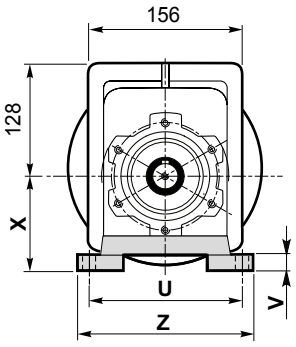

Flangia entrata
Input flange

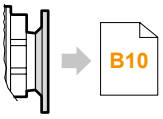

Albero uscita
Output shaft
2

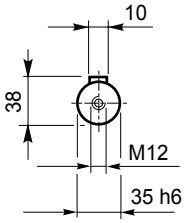

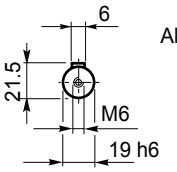

Albero entrata
Input shaft
1

CMG 043 H..

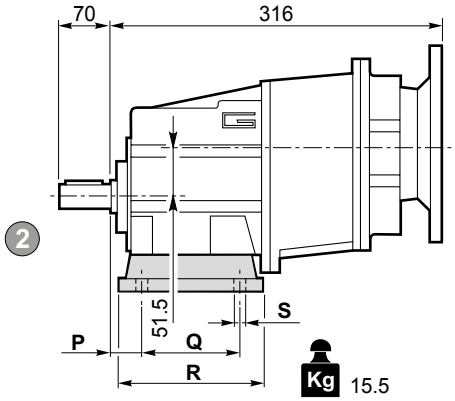

CMGIS 043 H..

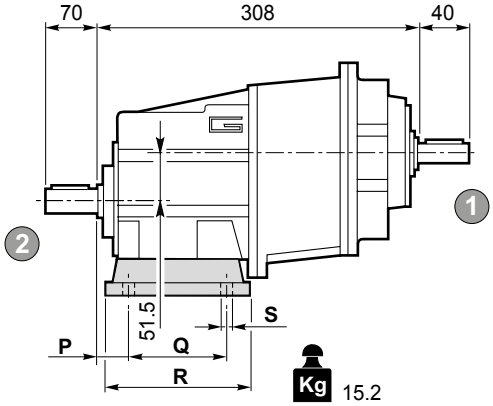

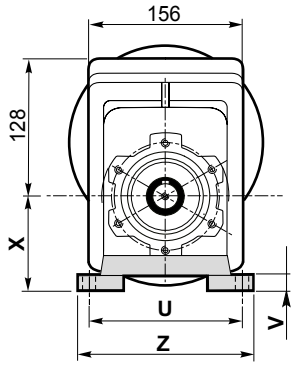

Flangia entrata
Input flange

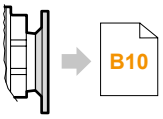

Albero uscita
Output shaft
2

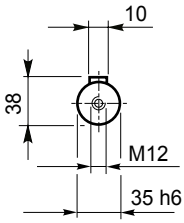

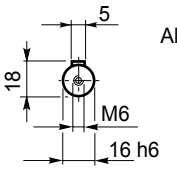

Albero entrata
Input shaft
1

Versione **H** / ***H** Version*										
CMG CMGIS	**P**	**Q**	**R**	**S**	**U**	**V**	**X**	**Z**	**Piede / *Foot***	
									Tipo / *Type*	Peso / *Weight* [kg]
042 043	**30**	**105**	**136**	**14**	**160**	**14**	**95**	**194**	**H95**	**1.5**
	30	100	150	11	150	14	110	185	**H110**	1.9
	18	70			160					
	30	165	195	14	135	14	115	170	**H115**	2.2
	35	110	160	14	170	14	120	210	**H120**	2.6
	19.5	149.5	184	14	180	18	130	214	**H130**	2.9

Preferenziale / *Preferred*

Dimensioni ***Dimensions***

CMG 042 F.. - CMG 043 F..

CMG 042 F..

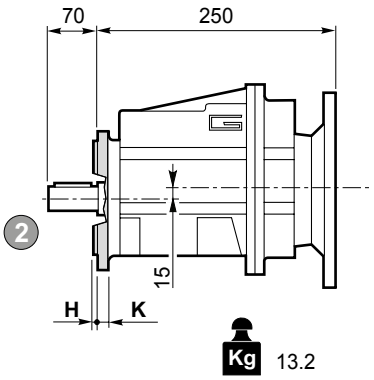

CMGIS 042 F..

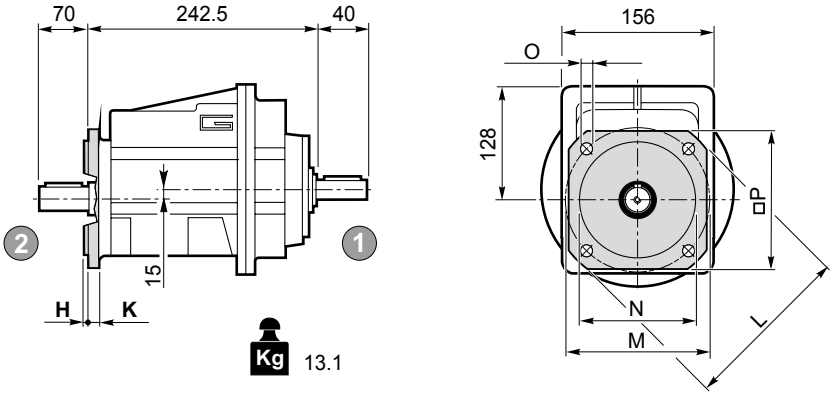

Flangia entrata
Input flange

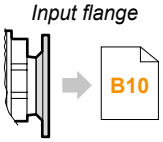

Albero uscita
Output shaft
2

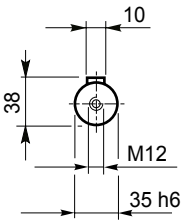

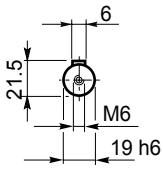

Albero entrata
Input shaft
1

CMG 043 F..

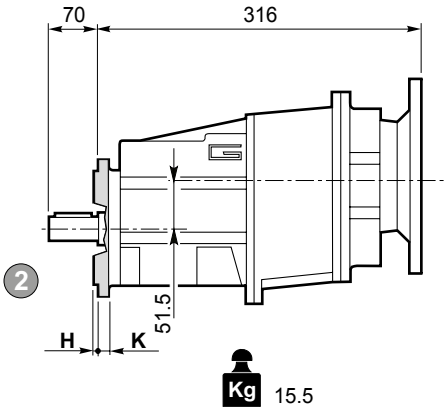

CMGIS 043 F..

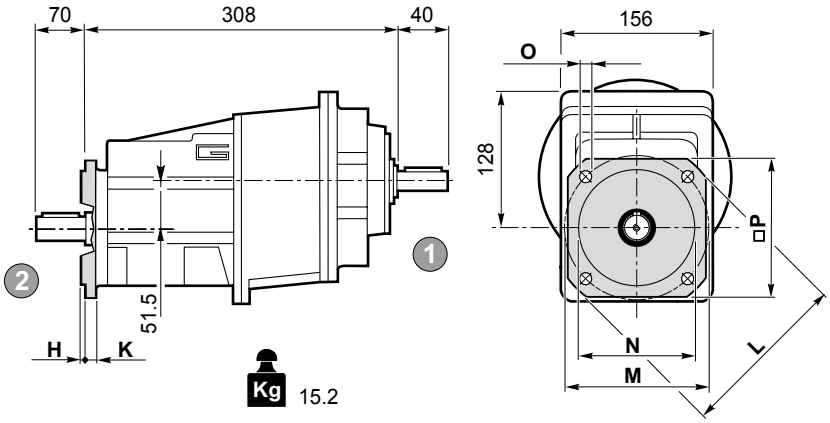

Flangia entrata
Input flange

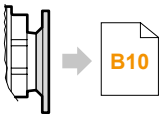

Albero uscita
Output shaft
2

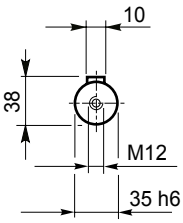

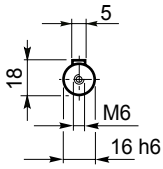

Albero entrata
Input shaft
1

Versione **F** / ***F Version***									
CMG CMGIS	**H**	**K**	**L**	**M**	**N** f7	**O**	**P**	**Flangia / *Flange***	
								Tipo / *Type*	Peso / *Weight* [kg]
042 043	3.5	11	160	130	110	9	140	**F160**	1.0
	3.5	11	200	165	130	11	165	**F200**	1.8
	4	13	250	215	180	14	215	**F250**	2.9

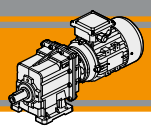

Dimensioni ***Dimensions***

CMG 042 H../F.. - CMG 043 H../F..

CMG 042 H../F..

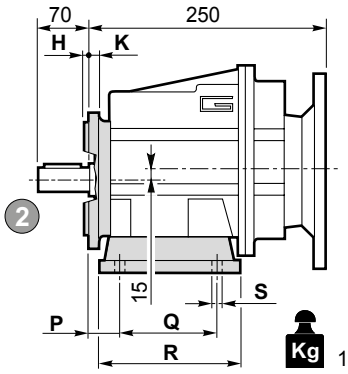

CMGIS 042 H../F..

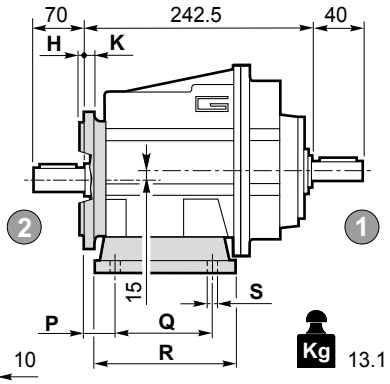

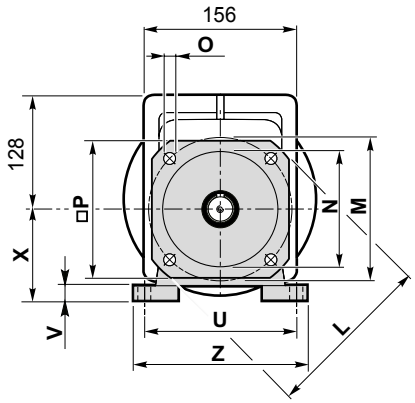

Flangia entrata
Input flange

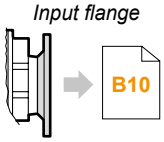

Albero uscita
Output shaft
2

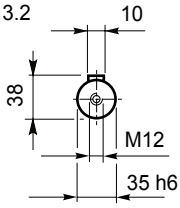

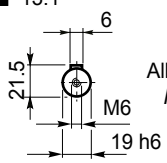

Albero entrata
Input shaft
1

CMG 043 H../F..

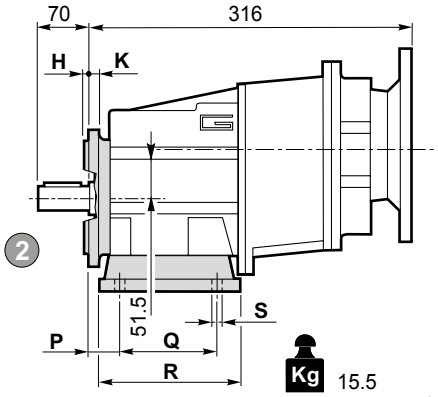

CMGIS 043 H../F..

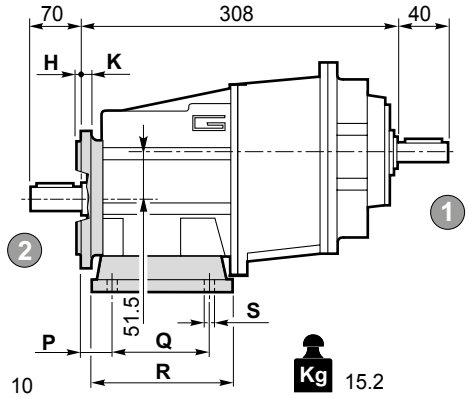

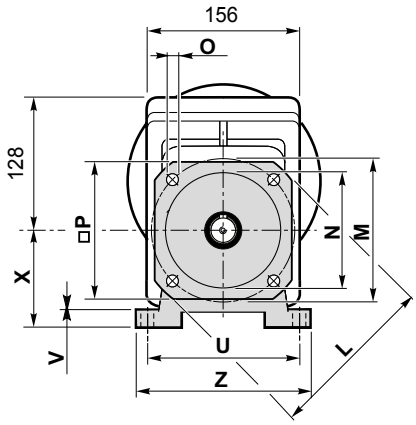

Flangia entrata
Input flange

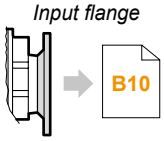

Albero uscita
Output shaft
2

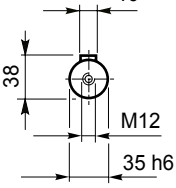

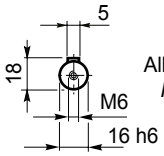

Albero entrata
Input shaft
1

Versione **H** / ***H*** *Version*											Combinazioni possibili H/F *Possible combinations H/F*		
CMG CMGIS	**P**	**Q**	**R**	**S**	**U**	**V**	**X**	**Z**	**Piede / *Foot*** Tipo *Type*	Peso / *Weight* [kg]	**F160**	**F200**	**F250**
042 043	**30**	**105**	**136**	**14**	**160**	**14**	**95**	**194**	**H95**	**1.5**	•	•	
	30	100	150	11	150	14	110	185	**H110**	1.9	•	•	
	18	70			160								
	30	165	195	14	135	14	115	170	**H115**	2.2	•	•	•
	35	110	160	14	170	14	120	210	**H120**	2.6	•	•	•
	19.5	149.5	184	14	180	18	130	214	**H130**	2.9	•	•	•

Preferenziale / *Preferred*

• Combinazioni possibili H/F / *Possible combinations H/F*

Versione **F** / ***F*** *Version*									
CMG CMGIS	**H**	**K**	**L**	**M**	**N** f7	**O**	**P**	**Flangia / *Flange*** Tipo / *Type*	Peso / *Weight* [kg]
042 043	3.5	11	160	130	110	9	140	**F160**	1.0
	3.5	11	200	165	130	11	165	**F200**	1.8
	4	13	250	215	180	14	215	**F250**	2.9

MA TRANSTECNO S.A.P.I. DE C.V.
Av. Mundial # 176, Parque Industrial
JM Apodaca, Nuevo León,
C.P. 66600
MÉXICO
T +52 8113340920
info@transtecno.com.mx
www.transtecno.com.mx

TRANSTECNO SRL
Via Caduti di Sabbiuno, 11/D-E
40011 Anzola dell'Emilia (BO)
ITALY
T+39 051 64 25 811
F +39 051 73 39 04
sales@transtecno.com
www.transtecno.com

HANGZHOU TRANSTECNO POWER TRANSMISSIONS CO LTD
No.4 Xiuyan Road Fengdu Industry Zone
Pingyao Town Yuhang District
Hangzhou City, Zhejiang Province
311115 – CHINA
T +86 571 86 92 02 60
F +86 571 86 92 18 10
info-china@transtecno.com
www.transtecno.cn

CATACALU0118

TRANSTECNO U.S.A. LLC
5440 S.W. 156th Place Miami,
FL 33185 - USA
Tel: +1 (305) 220-4423
Fax: +1 (305) 220-5945
usaoffice@transtecno.com

TRANSTECNO B.V.
Ind. terrein Wieken/Vinkenhoef
De Stuwdam,43
3815 KM Amersfoort - NETHERLANDS
Tel: +31(0) 33 45 19 505
Fax: +31(0) 33 45 19 506
info@transtecno.nl
www.transtecno.nl

SALES OFFICE INDIA
A/10, Anagha, S.N. Road, Mulund (W) Mumbai
400080 - INDIA
Tel: +91 9820614698
Fax-Italy: +39 051 733 904
indiaoffice@transtecno.com

SALES OFFICE BRAZIL
Rua Dr. Freire Alemão 155 / 402 - CEP. 90450-060
Auxiliadora Porto Alegre RS - BRAZIL
Tel: +55 51 3251 5447
Fax: +55 51 3251 5447
Mobile: +55 51 811 45 962
braziloffice@transtecno.com
www.transtecno.com.br

TRANSTECNO IBÉRICA
THE MODULAR GEARMOTOR, S.A.
C/Enginy, 2 Nave 6 - 08850 Gavà (Barcelona) - SPAIN
Tel: +34 931 598 950
info@transtecno.es
www.transtecno.es

SALES OFFICE SOUTH KOREA
D-304 Songdo BRC Smart Valley 30, Songdomirae-ro,
Yeonsu-gu, Incheon, 406-840 - KOREA
Tel: +82 70 8288 2107
Fax: +82 32 815 2107
Mobile: +82 10 5094 2107
koreaoffice@transtecno.com

SALES OFFICE FRANCE
12 Impasse des Mûriers
38300 Ruy - FRANCE
Tel: +33 (0) 6 85 12 09 87
Fax-Italy: +39 051 733 904
franceoffice@transtecno.com
www.transtecno.fr

SALES OFFICE OCEANIA
44 Northview drive, Sunshine west 3020
Victoria - AUSTRALIA
Ph +61 03 9312 4722
Fax +61 03 9312 4714
Mobile: +61 0438060997
oceaniaoffice@transtecno.com
www.transtecno.com.au

TRANSTECNO®
the modular gearmotor

www.transtecno.com

designed by Procedi srl