TRANSTECNO®
the modular gearmotor

CMM

CMM

CMM Alu

Motoriduttori combinati a vite senza fine
Double reduction wormgearmotors

TRANSTECNO · GENUINE · PRODUCTS ·

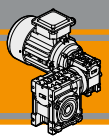

Indice	*Index*	Pag. *Page*
Caratteristiche tecniche	*Technical features*	**H2**
Designazione	*Classification*	**H2**
Esecuzioni di montaggio	*Mounting executions*	**H3**
Simbologia	*Symbols*	**H3**
Combinazioni rapporti	*Combination ratio*	**H3**
Lubrificazione	*Lubrication*	**H4**
Dati tecnici	*Technical data*	**H5**
Motori applicabili	*IEC Motor adapters*	**H10**
Dimensioni	*Dimensions*	**H12**
Accessori	*Accessories*	**H16**
Opzioni	*Options*	**H16**

Questa sezione annulla e sostituisce ogni precedente edizione o revisione. Qualora questa sezione non Vi sia giunta in distribuzione controllata, l'aggiornamento dei dati ivi contenuto non è assicurato. **In tal caso la versione più aggiornata è disponibile sul nostro sito internet www.transtecno.com**

This section replaces any previous edition and revision. If you obtained this catalogue other than through controlled distribution channels, the most up to date content is not guaranteed. ***In this case the latest version is available on our web site www.transtecno.com***

Caratteristiche tecniche

Technical features

I motoriduttori combinati a vite senza fine della serie CMM hanno le seguenti caratteristiche principali :

- Carcassa in alluminio nelle grandezze 026, 030, 040, 050, 063, 070, 075, 090 e 110. La grandezza 130 è costruita con carcassa in ghisa;
- Le grandezze 090, 110 e 130 sono fornite con cuscinetti a rulli conici sulla vite;
- Lubrificazione permanente con olio sintetico.

CMM double reduction worm gearmotors range have the following main features:

- Die-cast aluminium housing on sizes 026, 030, 040, 050, 063, 070, 075, 090 and 110. Cast iron housing on size 130;
- Double taper roller bearing on sizes 090, 110 and 130;
- Permanent synthetic oil long-life lubrication.

Designazione

Classification

RIDUTTORE / *GEARBOX*

CMM	030/063	FD	20	71	B5	SZDX	BRSX	90	M1	US1	VS
Tipo *Type*	Grandezza *Size*	Versione *Version*	Rapporto *Ratio*	IEC	Forma costruttiva Version	Albero di uscita *Output shaft*	Braccio di reazione *Torque arm*	Angolo *Angle*	Pos. di montaggio Mounting position	*Esecuzione di montaggio* *Mounting execution*	Opzioni *Options*
CMM **CMMIS**	**026/026** **026/030** **026/040** **026/050** **030/040** **030/050** **030/063** **040/063** **040/070** **040/075** **040/090** **050/110** **063/130**	**U** **FD** **FS** **FBD** **FBS** **FLD** **FLS**	vedi tabelle- *see tables*	**56..** **—** **90..**	**B5** **B14**	**SZDX** **SZSX** **DZ**	**BRDX** **BRSX**	**0°** **90°** **180°** **270°**	**M1** (B3) **M2** (V6) **M3** (B8) **M4** (V5) **M6** (B6) **M5** (B7)	**UB1** **UB2** **US1** **US2** **UV1** **UV2** **UC1** **UC2**	**VS1** **VS2**

Versione Riduttore
Gearbox Version

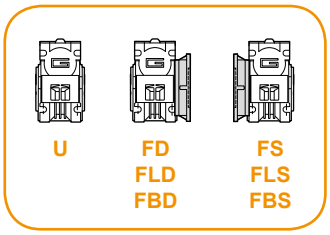

Albero di uscita
Output shaft

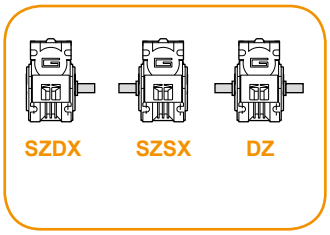

Braccio di reazione
Torque arm

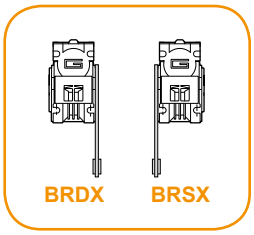

Angolo
Angle

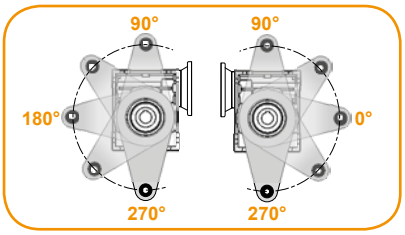

MOTORE CM / *CM MOTOR*

0.25kW	4p	3ph	230/400V	50Hz	T1
Potenza *Power* IEC Vedi tabelle *See tables*	Poli *Poles* **2p** **4p** **6p** **8p**	Fasi *Phases* **1ph** **3ph**	Tensione *Voltage* **230V** **230/400V**	Frequenza *Frequency* **50Hz** **60Hz**	Pos. morsettiera *Terminal box pos.* **T1** (Std) **T4** **T2** **T3**

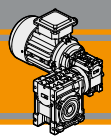

Esecuzioni di montaggio — *Mounting executions*

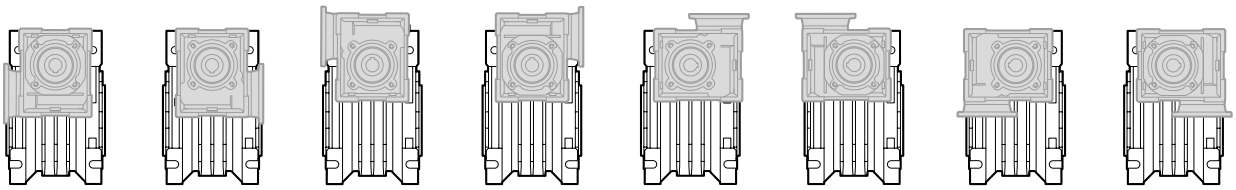

UB1 UB2 US1 US2 UV1 UV2 UC1 UC2

Simbologia — *Symbols*

n_1	[min^{-1}]	Velocità in ingresso / *Input speed*	M_2	[Nm]	Coppia in uscita in funzione di P_1 / *Output torque referred to P_1*
n_2	[min^{-1}]	Velocità in uscita / *Output speed*	sf		Fattore di servizio / *Service factor*
i		Rapporto di riduzione / *Ratio*	R_2	[N]	Carico radiale ammissibile in uscita / *Permitted output radial load*
P_1	[kW]	Potenza in entrata / *Input power*	A_2	[N]	Carico assiale ammissibile in uscita / *Permitted output axial load*

Combinazioni rapporti — *Combination ratio*

CMM 026/026 - CMM 026/030 - CMM 026/040 - CMM 026/050												
	i (i_1 x i_2)											
	150	**225**	**300**	**450**	**600**	**900**	**1200**	**1500**	**1800**	**2400**	**3000**	**3600**
i_1	10	15	10	15	20	30	40	50	60	60	60	60
i_2	15	15	30	30	30	30	30	30	30	40	50	60

CMM 030/040 - CMM 030/050 - CMM 030/063 - CMM 040/063 - CMM 040/070 - CMM 040/075 - CMM 040/090 - CMM 050/110 - CMM 063/130																
	i (i_1 x i_2)															
	75	**100**	**150**	**200**	**250**	**300**	**400**	**500**	**600**	**750**	**900**	**1200**	**1500**	**1800**	**2400**	**3000**
i_1	7.5	10	10	10	10	10	10	10	20	25	30	40	50	60	60	60
i_2	10	10	15	20	25	30	40	50	30	30	30	30	30	30	40	50

Lubrificazione

Tutti i motoriduttori nelle taglie 26, 30, 40, 50, 63, 70, 75, 90, 110 sono forniti completi di lubrificante sintetico viscosità 320, pertanto possono essere installati in qualunque posizione di monatggio e non necessitano di manutenzione. Per la taglia 130 la lubrificazione dipende dalla posizione di montaggio

Lubrication

Permanent synthetic oil long-life lubrication (viscosity grade 320) makes it possible to use the gearmotors size 26, 30, 40, 50, 63, 70, 75, 90, 110 in all mounting positions; for this reason they can be installed in any assembly position and do not require maintenance. Only for size 130, the lubrication depended of mounting positions

	Quantità di olio (litri) / ***Oil quantity*** *(litres)*					
	M1 (B3)	**M3** (B8)	**M6** (B6)	**M5** (B7)	**M4** (V5)	**M2** (V6)
CM130	4.5	3.3	3.5	3.5	4.5	3.3

Lubrificato a vita
Life lubrication

Posizioni di montaggio / *Mounting positions*

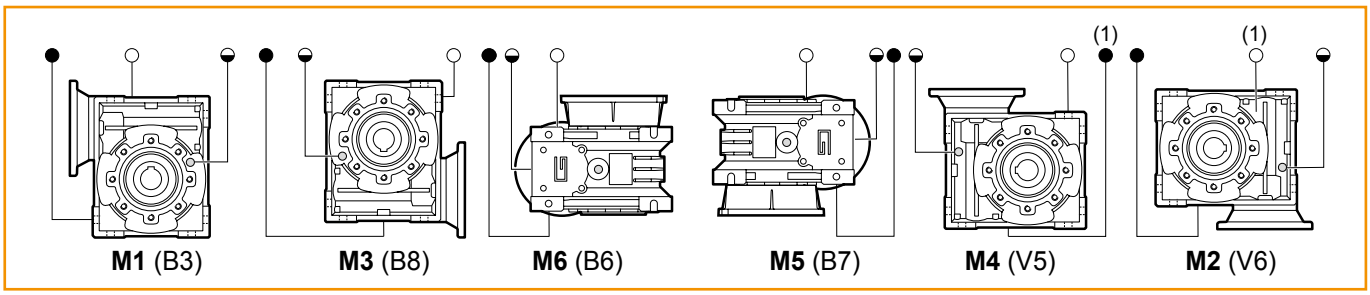

(standard)

(1): Tappo in posizione posteriore / *Plug in backside position*

◯ Sfiato e tappo di riempimento / *Breather and filling plug*
◒ Livello olio / *Oil level plug*
● Tappo di scarico / *Oil drain plug*

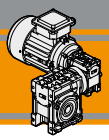

Dati tecnici / *Technical data*

P_1 [kW]	n_2 [min^{-1}]	M_2 [Nm]	sf	i		IEC
0.06						
56A4 (1400 min^{-1})	**9.3**	33	0.8	150	**CMM 026/026**	**B14**
	6.2	33	0.8	225		**B14**
	4.7	34	0.8	300		**B14**
	3.1	34	0.8	450		**B14**
	2.3	34	0.8	600		**B14**
	1.6	34	0.8	900		**B14**
	1.2	34	0.8	1200		**B14**
	0.9	34	0.8	1500		**B14**
	0.8	34	0.8	1800		**B14**
	0.6	28	0.8	2400		**B14**
	0.5	25	0.8	3000		**B14**
	0.4	23	0.8	3600		**B14**
	9.3	34	1.1	150	**CMM 026/030**	**B14**
	6.2	48	0.8	225		**B14**
	4.7	50	0.8	300		**B14**
	3.1	50	0.8	450		**B14**
	2.3	50	0.8	600		**B14**
	1.6	50	0.8	900		**B14**
	1.2	50	0.8	1200		**B14**
	0.93	50	0.8	1500		**B14**
	0.78	50	0.8	1800		**B14**
	0.58	43	0.8	2400		**B14**
	0.47	38	0.8	3000		**B14**
	0.39	34	0.8	3600		**B14**
	9.3	35	2.5	150	**CMM 026/040**	**B14**
	6.2	50	1.8	225		**B14**
	4.7	58	1.5	300		**B14**
	3.1	82	1.1	450		**B14**
	2.3	104	0.9	600		**B14**
	1.6	113	0.8	900		**B14**
	1.2	113	0.8	1200		**B14**
	0.93	113	0.8	1500		**B14**
	0.78	113	0.8	1800		**B14**
	0.58	93	0.8	2400		**B14**
	0.47	85	0.8	3000		**B14**
	0.39	78	0.8	3600		**B14**
	9.3	37	4.4	150	**CMM 026/050**	**B14**
	6.2	52	3.1	225		**B14**
	4.7	59	2.7	300		**B14**
	3.1	83	1.9	450		**B14**
	2.3	105	1.5	600		**B14**
	1.6	141	1.1	900		**B14**
	1.2	174	0.9	1200		**B14**
	0.93	203	0.8	1500		**B14**
	0.78	203	0.8	1800		**B14**
	0.58	169	0.8	2400		**B14**
	0.47	156	0.8	3000		**B14**
	0.39	141	0.8	3600		**B14**
	9.3	36	2.4	150	**CMM 030/040**	**B5/B14**
	7.0	46	1.6	200		**B5/B14**
	5.6	55	1.2	250		**B5/B14**
	4.7	59	1.5	300		**B5/B14**
	3.5	72	1.0	400		**B5/B14**
	2.8	81	0.8	500		**B5/B14**
	2.3	105	0.9	600		**B5/B14**
	1.9	113	0.8	750		**B5/B14**
	1.6	113	0.8	900		**B5/B14**
	1.2	113	0.8	1200		**B5/B14**
	0.93	113	0.8	1500		**B5/B14**
	0.78	113	0.8	1800		**B5/B14**
	0.58	93	0.8	2400		**B5/B14**
	0.47	85	0.8	3000		**B5/B14**

P_1 [kW]	n_2 [min^{-1}]	M_2 [Nm]	sf	i		IEC
0.06						
56A4 (1400 min^{-1})	**3.5**	73	1.9	400	**CMM 030/050**	**B5/B14**
	2.8	83	1.5	500		**B5/B14**
	2.3	107	1.5	600		**B5/B14**
	1.9	128	1.3	750		**B5/B14**
	1.6	143	1.1	900		**B5/B14**
	1.2	203	0.8	1200		**B5/B14**
	0.93	203	0.8	1500		**B5/B14**
	0.78	203	0.8	1800		**B5/B14**
	0.58	169	0.8	2400		**B5/B14**
	0.47	156	0.8	3000		**B5/B14**
	2.8	86	2.7	500	**CMM 030/063**	**B5/B14**
	2.3	111	2.8	600		**B5/B14**
	1.9	133	2.3	750		**B5/B14**
	1.6	148	2.1	900		**B5/B14**
	1.2	183	1.7	1200		**B5/B14**
	0.93	214	1.5	1500		**B5/B14**
	0.78	243	1.3	1800		**B5/B14**
	0.58	292	0.9	2400		**B5/B14**
	0.47	290	0.8	3000		**B5/B14**
	2.8	86	2.7	500	**CMM 040/063**	**B5/B14**
	2.3	115	2.7	600		**B5/B14**
	1.9	136	2.3	750		**B5/B14**
	1.6	155	2.0	900		**B5/B14**
	1.2	192	1.6	1200		**B5/B14**
	0.93	221	1.4	1500		**B5/B14**
	0.78	256	1.2	1800		**B5/B14**
	0.58	308	0.8	2400		**B5/B14**
	0.47	290	0.8	3000		**B5/B14**
	1.17	172	2.6	1200	**CMM 040/070**	**B5/B14**
	0.93	221	2.0	1500		**B5/B14**
	0.78	256	1.8	1800		**B5/B14**
	0.58	308	1.2	2400		**B5/B14**
	0.47	356	0.9	3000		**B5/B14**
	0.93	221	2.5	1500	**CMM 040/075**	**B5/B14**
	0.78	256	2.1	1800		**B5/B14**
	0.58	313	1.5	2400		**B5/B14**
	0.47	356	1.1	3000		**B5/B14**
	0.58	330	2.5	2400	**CMM 040/090**	**B5/B14**
	0.47	385	1.8	3000		**B5/B14**
0.09						
56B4 (1400 min^{-1})	**9.3**	53	1.6	150	**CMM 026/040**	**B14**
	6.2	74	1.2	225		**B14**
	4.7	87	1.0	300		**B14**
	9.3	55	2.9	150	**CMM 026/050**	**B14**
	6.2	78	2.1	225		**B14**
	4.7	89	1.8	300		**B14**
	3.1	125	1.3	450		**B14**
	2.3	158	1.0	600		**B14**
	19	29	2.9	75	**CMM 030/040**	**B5/B14**
	14	39	2.2	100		**B5/B14**
	9.3	53	1.6	150		**B5/B14**
	7.0	69	1.1	200		**B5/B14**
	4.7	88	1.0	300		**B5/B14**

Verificare sempre che la coppia M_2 utilizzata non ecceda il valore indicato nelle caselle in grigio.
Please check that the output torque M_2 does not exceed the value in the grey areas.

Dati tecnici

Technical data

P_1 [kW]	n_2 [min^{-1}]	M_2 [Nm]	sf	i		IEC
0.09						
56B4 (1400 min^{-1})	**19**	30	5.2	75	**CMM**	**B5/B14**
	14	39	4.0	100	**030/050**	**B5/B14**
	9.3	56	2.9	150		**B5/B14**
	7.0	70	2.0	200		**B5/B14**
	5.6	83	1.5	250		**B5/B14**
	4.7	90	1.8	300		**B5/B14**
	3.5	109	1.2	400		**B5/B14**
	2.8	124	1.0	500		**B5/B14**
	2.3	160	1.0	600		**B5/B14**
	1.9	192	0.8	750		**B5/B14**
	7.0	69	3.8	200	**CMM**	**B5/B14**
	5.6	81	2.8	250	**030/063**	**B5/B14**
	4.7	93	3.3	300		**B5/B14**
	3.5	111	2.3	400		**B5/B14**
	2.8	129	1.8	500		**B5/B14**
	2.3	166	1.9	600		**B5/B14**
	1.9	199	1.6	750		**B5/B14**
	1.6	222	1.4	900		**B5/B14**
	1.2	274	1.1	1200		**B5/B14**
	0.93	320	1.0	1500		**B5/B14**
	0.78	365	0.9	1800		**B5/B14**
	7.0	69	3.8	200	**CMM**	**B5/B14**
	5.6	81	2.8	250	**040/063**	**B5/B14**
	4.7	93	3.3	300		**B5/B14**
	3.5	111	2.3	400		**B5/B14**
	2.8	129	1.8	500		**B5/B14**
	2.3	172	1.8	600		**B5/B14**
	1.9	204	1.5	750		**B5/B14**
	1.6	232	1.3	900		**B5/B14**
	1.2	287	1.1	1200		**B5/B14**
	0.93	320	1.0	1500		**B5/B14**
	0.78	385	0.8	1800		**B5/B14**
	2.8	129	2.6	500	**CMM**	**B5/B14**
	2.3	172	2.6	600	**040/070**	**B5/B14**
	1.9	204	2.2	750		**B5/B14**
	1.6	232	2.0	900		**B5/B14**
	1.2	259	1.8	1200		**B5/B14**
	0.93	332	1.4	1500		**B5/B14**
	0.78	385	1.2	1800		**B5/B14**
	1.6	232	2.4	900	**CMM**	**B5/B14**
	1.2	287	1.9	1200	**040/075**	**B5/B14**
	0.93	332	1.6	1500		**B5/B14**
	0.78	385	1.4	1800		**B5/B14**
	0.58	470	1.0	2400		**B5/B14**
	1.2	302	3.1	1200	**CMM**	**B5/B14**
	0.93	348	2.7	1500	**040/090**	**B5/B14**
	0.78	404	2.3	1800		**B5/B14**
	0.58	496	1.6	2400		**B5/B14**
	0.47	577	1.2	3000		**B5/B14**

P_1 [kW]	n_2 [min^{-1}]	M_2 [Nm]	sf	i		IEC
0.12						
63A4 (1400 min^{-1})	**19**	39	2.1	75	**CMM**	**B5/B14**
	14	52	1.6	100	**030/040**	**B5/B14**
	9.3	71	1.2	150		**B5/B14**
	7.0	92	0.8	200		**B5/B14**
	19	40	3.9	75	**CMM**	**B5/B14**
	14	52	3.0	100	**030/050**	**B5/B14**
	9.3	74	2.2	150		**B5/B14**
	7.0	94	1.5	200		**B5/B14**
	5.6	110	1.1	250		**B5/B14**
	4.7	120	1.4	300		**B5/B14**
	3.5	146	0.9	400		**B5/B14**
	7.0	92	2.8	200	**CMM**	**B5/B14**
	5.6	108	2.1	250	**030/063**	**B5/B14**
	4.7	124	2.5	300		**B5/B14**
	3.5	149	1.8	400		**B5/B14**
	2.8	172	1.3	500		**B5/B14**
	2.3	221	1.4	600		**B5/B14**
	1.9	265	1.2	750		**B5/B14**
	1.6	296	1.0	900		**B5/B14**
	1.2	365	0.8	1200		**B5/B14**
	7.0	92	2.8	200	**CMM**	**B5/B14**
	5.6	108	2.1	250	**040/063**	**B5/B14**
	4.7	124	2.5	300		**B5/B14**
	3.5	149	1.8	400		**B5/B14**
	2.8	172	1.3	500		**B5/B14**
	2.3	230	1.3	600		**B5/B14**
	1.9	273	1.1	750		**B5/B14**
	1.6	309	1.0	900		**B5/B14**
	1.2	383	0.8	1200		**B5/B14**
	3.5	149	2.6	400	**CMM**	**B5/B14**
	2.8	172	2.0	500	**040/070**	**B5/B14**
	2.3	230	2.0	600		**B5/B14**
	1.9	273	1.7	750		**B5/B14**
	1.6	309	1.5	900		**B5/B14**
	1.2	383	1.2	1200		**B5/B14**
	0.93	442	1.0	1500		**B5/B14**
	0.78	513	0.9	1800		**B5/B14**
	2.8	172	2.3	500	**CMM**	**B5/B14**
	2.3	230	2.4	600	**040/075**	**B5/B14**
	1.9	273	2.0	750		**B5/B14**
	1.6	309	1.8	900		**B5/B14**
	1.2	383	1.4	1200		**B5/B14**
	0.93	442	1.2	1500		**B5/B14**
	0.78	513	1.1	1800		**B5/B14**
	1.6	325	2.9	900	**CMM**	**B5/B14**
	1.2	402	2.3	1200	**040/090**	**B5/B14**
	0.93	464	2.0	1500		**B5/B14**
	0.78	538	1.8	1800		**B5/B14**
	0.58	661	1.2	2400		**B5/B14**
	0.47	769	0.9	3000		**B5/B14**
	0.78	566	2.8	1800	**CMM**	**B5/B14**
	0.58	719	2.0	2400	**050/110**	**B5/B14**
	0.47	855	1.5	3000		**B5/B14**

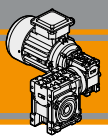

Dati tecnici

Technical data

0.18

P_1 [kW]	n_2 [min^{-1}]	M_2 [Nm]	sf	i		IEC
63B4 (1400 min^{-1})	**19**	59	1.4	75	**CMM**	**B5/B14**
	14	77	1.1	100	**030/040**	**B5/B14**
	9.3	107	0.8	150		**B5/B14**
	19	59	2.6	75	**CMM**	**B5/B14**
	14	78	2.0	100	**030/050**	**B5/B14**
	9.3	111	1.4	150		**B5/B14**
	7.0	140	1.0	200		**B5/B14**
	5.6	165	0.7	250		**B5/B14**
	4.7	179	0.9	300		**B5/B14**
	19	60	4.8	75	**CMM**	**B5/B14**
	14	79	3.6	100	**030/063**	**B5/B14**
	9.3	110	2.8	150		**B5/B14**
	7.0	138	1.9	200		**B5/B14**
	5.6	162	1.4	250		**B5/B14**
	4.7	186	1.7	300		**B5/B14**
	3.5	223	1.2	400		**B5/B14**
	2.8	258	0.9	500		**B5/B14**
	2.3	332	0.9	600		**B5/B14**
	19	61	4.7	75	**CMM**	**B5/B14**
	14	79	3.6	100	**040/063**	**B5/B14**
	9.3	110	2.8	150		**B5/B14**
	7.0	138	1.9	200		**B5/B14**
	5.6	162	1.4	250		**B5/B14**
	4.7	186	1.7	300		**B5/B14**
	3.5	223	1.2	400		**B5/B14**
	2.8	258	0.9	500		**B5/B14**
	2.3	345	0.9	600		**B5/B14**
	7.0	140	2.8	200	**CMM**	**B5/B14**
	5.6	168	2.0	250	**040/070**	**B5/B14**
	4.7	186	2.4	300		**B5/B14**
	3.5	223	1.7	400		**B5/B14**
	2.8	258	1.3	500		**B5/B14**
	2.3	345	1.3	600		**B5/B14**
	1.9	409	1.1	750		**B5/B14**
	1.6	464	1.0	900		**B5/B14**
	5.6	168	2.4	250	**CMM**	**B5/B14**
	4.7	186	2.9	300	**040/075**	**B5/B14**
	3.5	227	2.1	400		**B5/B14**
	2.8	258	1.6	500		**B5/B14**
	2.3	345	1.6	600		**B5/B14**
	1.9	409	1.3	750		**B5/B14**
	1.6	464	1.2	900		**B5/B14**
	1.2	575	1.0	1200		**B5/B14**
	2.8	278	2.5	500	**CMM**	**B5/B14**
	2.3	362	2.6	600	**040/090**	**B5/B14**
	1.9	429	2.2	750		**B5/B14**
	1.6	487	1.9	900		**B5/B14**
	1.2	603	1.6	1200		**B5/B14**
	0.93	696	1.4	1500		**B5/B14**
	0.78	808	1.2	1800		**B5/B14**
	1.2	632	2.5	1200	**CMM**	**B5/B14**
	0.93	743	2.1	1500	**050/110**	**B5/B14**
	0.78	849	1.9	1800		**B5/B14**
	0.58	1079	1.3	2400		**B5/B14**
	0.47	1282	1.0	3000		**B5/B14**
	0.93	802	2.6	1500	**CMM**	**B5/B14**
	0.78	919	2.2	1800	**063/110**	**B5/B14**
	0.58	1170	1.6	2400		**B5/B14**
	0.47	1416	1.1	3000		**B5/B14**

0.22

P_1 [kW]	n_2 [min^{-1}]	M_2 [Nm]	sf	i		IEC
63C4 (1400 min^{-1})	**19**	72	1.2	75	**CMM**	**B5/B14**
	14	95	0.9	100	**030/040**	**B5/B14**
	19	73	2.1	75	**CMM**	**B5/B14**
	14	96	1.6	100	**030/050**	**B5/B14**
	9.3	136	1.2	150		**B5/B14**
	7.0	171	0.8	200		**B5/B14**
	19	74	3.9	75	**CMM**	**B5/B14**
	14	97	3.0	100	**030/063**	**B5/B14**
	9.3	134	2.3	150		**B5/B14**
	7.0	169	1.5	200		**B5/B14**
	5.6	199	1.2	250		**B5/B14**
	4.7	227	1.4	300		**B5/B14**
	3.5	272	1.0	400		**B5/B14**
	19	75	3.9	75	**CMM**	**B5/B14**
	14	97	3.0	100	**040/063**	**B5/B14**
	9.3	134	2.3	150		**B5/B14**
	7.0	169	1.5	200		**B5/B14**
	5.6	199	1.2	250		**B5/B14**
	4.7	227	1.4	300		**B5/B14**
	3.5	272	1.0	400		**B5/B14**
	7.0	171	2.3	200	**CMM**	**B5/B14**
	5.6	205	1.7	250	**040/070**	**B5/B14**
	4.7	227	2.0	300		**B5/B14**
	3.5	272	1.4	400		**B5/B14**
	2.8	315	1.1	500		**B5/B14**
	2.3	421	1.1	600		**B5/B14**
	1.9	500	0.9	750		**B5/B14**
	5.6	205	2.0	250	**CMM**	**B5/B14**
	4.7	227	2.4	300	**040/075**	**B5/B14**
	3.5	277	1.7	400		**B5/B14**
	2.8	315	1.3	500		**B5/B14**
	2.3	421	1.3	600		**B5/B14**
	1.9	500	1.1	750		**B5/B14**
	1.6	567	1.0	900		**B5/B14**
	3.5	292	2.8	400	**CMM**	**B5/B14**
	2.8	340	2.0	500	**040/090**	**B5/B14**
	2.3	442	2.1	600		**B5/B14**
	1.9	525	1.8	750		**B5/B14**
	1.6	596	1.6	900		**B5/B14**
	1.2	737	1.3	1200		**B5/B14**
	0.93	851	1.1	1500		**B5/B14**
	0.78	987	1.0	1800		**B5/B14**
	1.9	547	2.9	750	**CMM**	**B5/B14**
	1.6	622	2.6	900	**050/110**	**B5/B14**
	1.2	791	1.8	1200		**B5/B14**
	0.93	908	1.8	1500		**B5/B14**
	0.78	1037	1.5	1800		**B5/B14**
	0.58	1318	1.1	2400		**B5/B14**
	1.2	832	2.5	1200	**CMM**	**B5/B14**
	0.93	981	2.1	1500	**063/130**	**B5/B14**
	0.78	1123	1.8	1800		**B5/B14**
	0.58	1430	1.3	2400		**B5/B14**
	0.47	1730	0.9	3000		**B5/B14**

Dati tecnici

Technical data

P_1 [kW]	n_2 [min^{-1}]	M_2 [Nm]	sf	i		IEC
0.25						
71A4 (1400 min^{-1})	**19**	85	3.4	75	**CMM**	**B5/B14**
	14	110	2.6	100	**040/063**	**B5/B14**
	9.3	153	2.0	150		**B5/B14**
	7.0	192	1.4	200		**B5/B14**
	5.6	226	1.0	250		**B5/B14**
	4.7	258	1.2	300		**B5/B14**
	3.5	309	0.8	400		**B5/B14**
	19	86	4.9	75	**CMM**	**B5/B14**
	14	112	3.7	100	**040/070**	**B5/B14**
	9.3	155	2.8	150		**B5/B14**
	7.0	195	2.0	200		**B5/B14**
	5.6	233	1.5	250		**B5/B14**
	4.7	258	1.8	300		**B5/B14**
	3.5	309	1.2	400		**B5/B14**
	2.8	358	0.9	500		**B5/B14**
	2.3	479	0.9	600		**B5/B14**
	7.0	198	2.4	200	**CMM**	**B5/B14**
	5.6	233	1.8	250	**040/075**	**B5/B14**
	4.7	258	2.1	300		**B5/B14**
	3.5	315	1.5	400		**B5/B14**
	2.8	358	1.1	500		**B5/B14**
	2.3	479	1.1	600		**B5/B14**
	1.9	568	1.0	750		**B5/B14**
	1.6	645	0.8	900		**B5/B14**
	5.6	247	2.9	250	**CMM**	**B5/B14**
	4.7	271	3.5	300	**040/090**	**B5/B14**
	3.5	332	2.4	400		**B5/B14**
	2.8	387	1.8	500		**B5/B14**
	2.3	503	1.9	600		**B5/B14**
	1.9	596	1.6	750		**B5/B14**
	1.6	677	1.4	900		**B5/B14**
	1.2	838	1.1	1200		**B5/B14**
	0.93	967	1.0	1500		**B5/B14**
	2.8	420	3.0	500	**CMM**	**B5/B14**
	2.3	517	3.1	600	**050/110**	**B5/B14**
	1.9	622	2.6	750		**B5/B14**
	1.6	707	2.3	900		**B5/B14**
	1.2	878	1.8	1200		**B5/B14**
	0.93	1031	1.5	1500		**B5/B14**
	0.78	1179	1.4	1800		**B5/B14**
	0.58	1498	1.0	2400		**B5/B14**
	1.2	945	2.2	1200	**CMM**	**B5/B14**
	0.93	1114	1.9	1500	**063/130**	**B5/B14**
	0.78	1276	1.6	1800		**B5/B14**
	0.58	1624	1.1	2400		**B5/B14**
	0.47	1966	0.8	3000		**B5/B14**

P_1 [kW]	n_2 [min^{-1}]	M_2 [Nm]	sf	i		IEC
0.37						
71B4 (1400 min^{-1}	**19**	125	2.3	75	**CMM**	**B5/B14**
	14	163	1.8	100	**040/063**	**B5/B14**
	9.3	226	1.3	150		**B5/B14**
	7.0	284	0.9	200		**B5/B14**
	19	127	3.3	75	**CMM**	**B5/B14**
	14	165	2.5	100	**040/070**	**B5/B14**
	9.3	229	1.9	150		**B5/B14**
	7.0	288	1.4	200		**B5/B14**
	5.6	345	1.0	250		**B5/B14**
	4.7	382	1.2	300		**B5/B14**
	9.3	232	2.3	150	**CMM**	**B5/B14**
	7.0	293	1.6	200	**040/075**	**B5/B14**
	5.6	345	1.2	250		**B5/B14**
	4.7	382	1.4	300		**B5/B14**
	3.5	466	1.0	400		**B5/B14**
	7.0	305	2.6	200	**CMM**	**B5/B14**
	5.6	366	1.9	250	**040/090**	**B5/B14**
	4.7	401	2.4	300		**B5/B14**
	3.5	492	1.7	400		**B5/B14**
	2.8	572	1.2	500		**B5/B14**
	2.3	744	1.3	600		**B5/B14**
	1.9	882	1.1	750		**B5/B14**
	1.6	1002	0.9	900		**B5/B14**
	5.6	386	3.3	250	**CMM**	**B5/B14**
	4.7	412	3.9	300	**050/110**	**B5/B14**
	3.5	523	2.8	400		**B5/B14**
	2.8	622	2.0	500		**B5/B14**
	2.3	766	2.1	600		**B5/B14**
	1.9	921	1.7	750		**B5/B14**
	1.6	1047	1.5	900		**B5/B14**
	1.2	1299	1.2	1200		**B5/B14**
	0.93	1526	1.0	1500		**B5/B14**
	0.78	1745	0.9	1800		**B5/B14**
	1.9	974	2.1	750	**CMM**	**B5/B14**
	1.6	1124	1.8	900	**063/130**	**B5/B14**
	1.2	1399	1.5	1200		**B5/B14**
	0.93	1649	1.3	1500		**B5/B14**
	0.78	1889	1.1	1800		**B5/B14**
0.55						
71C4 (1400 min^{-1})	**19**	186	1.5	75	**CMM**	**B5/B14**
	14	243	1.2	100	**040/063**	**B5/B14**
	9.3	336	0.9	150		**B5/B14**
	19	189	2.2	75	**CMM**	**B5/B14**
	14	246	1.7	100	**040/070**	**B5/B14**
	9.3	340	1.3	150		**B5/B14**
	7.0	429	0.9	200		**B5/B14**
	19	189	2.7	75	**CMM**	**B5/B14**
	14	246	2.0	100	**040/075**	**B5/B14**
	9.3	345	1.5	150		**B5/B14**
	7.0	435	1.1	200		**B5/B14**
	4.7	567	1.0	300		**B5/B14**
	9.3	355	2.5	150	**CMM**	**B5/B14**
	7.0	454	1.8	200	**040/090**	**B5/B14**
	5.6	544	1.3	250		**B5/B14**
	4.7	596	1.6	300		**B5/B14**
	3.5	731	1.1	400		**B5/B14**
	2.3	1106	0.9	600		**B5/B14**

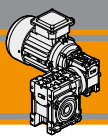

Dati tecnici

Technical data

P_1 [kW]	n_2 [min^{-1}]	M_2 [Nm]	sf	i		IEC
0.55						
71C4 (1400 min^{-1})	**7.0**	472	3.0	200	**CMM 050/110**	**B5/B14**
	5.6	574	2.3	250		**B5/B14**
	4.7	612	2.6	300		**B5/B14**
	3.5	778	1.9	400		**B5/B14**
	2.8	925	1.4	500		**B5/B14**
	2.3	1138	1.4	600		**B5/B14**
	1.9	1369	1.2	750		**B5/B14**
	1.6	1556	1.0	900		**B5/B14**
	3.5	813	2.2	400	**CMM 063/130**	**B5/B14**
	2.8	984	1.6	500		**B5/B14**
	2.3	1203	1.7	600		**B5/B14**
	1.9	1449	1.4	750		**B5/B14**
	1.6	1671	1.2	900		**B5/B14**
	1.2	2080	1.0	1200		**B5/B14**
80A4 (1400 min^{-1})	**19**	198	6.7	75	**CMM 050/110**	**B5/B14**
	14	258	5.2	100		**B5/B14**
	9.3	364	4.1	150		**B5/B14**
	7.0	472	3.0	200		**B5/B14**
	5.6	574	2.3	250		**B5/B14**
	4.7	612	2.6	300		**B5/B14**
	3.5	778	1.9	400		**B5/B14**
	2.8	925	1.4	500		**B5/B14**
	2.3	1138	1.4	600		**B5/B14**
	1.9	1369	1.2	750		**B5/B14**
	1.6	1556	1.0	900		**B5/B14**
	3.5	813	2.2	400	**CMM 063/130**	**B5/B14**
	2.8	984	1.6	500		**B5/B14**
	2.3	1203	1.7	600		**B5/B14**
	1.9	1449	1.4	750		**B5/B14**
	1.6	1671	1.2	900		**B5/B14**
	1.2	2080	1.0	1200		**B5/B14**
0.75						
80B4 (1400 min^{-1})	**19**	270	4.9	75	**CMM 050/110**	**B5/B14**
	14	352	3.8	100		**B5/B14**
	9.3	496	3.0	150		**B5/B14**
	7.0	644	2.2	200		**B5/B14**
	5.6	783	1.7	250		**B5/B14**
	4.7	835	1.9	300		**B5/B14**
	3.5	1061	1.4	400		**B5/B14**
	2.8	1261	1.0	500		**B5/B14**
	2.3	1552	1.0	600		**B5/B14**
	1.9	1866	0.9	750		**B5/B14**
	7.0	660	2.7	200	**CMM 063/130**	**B5/B14**
	5.6	803	2.0	250		**B5/B14**
	4.7	871	2.4	300		**B5/B14**
	3.5	1109	1.6	400		**B5/B14**
	2.8	1342	1.2	500		**B5/B14**
	2.3	1641	1.3	600		**B5/B14**
	1.9	1975	1.0	750		**B5/B14**
	1.6	2279	0.9	900		**B5/B14**

P_1 [kW]	n_2 [min^{-1}]	M_2 [Nm]	sf	i		IEC
1.1						
80C4 (1400 min^{-1})	**19**	397	3.4	75	**CMM 050/110**	**B5/B14**
	14	517	2.6	100		**B5/B14**
	9.3	727	2.0	150		**B5/B14**
	7.0	944	1.5	200		**B5/B14**
	5.6	1148	1.1	250		**B5/B14**
	4.7	1225	1.3	300		**B5/B14**
	3.5	1556	0.9	400		**B5/B14**
	7.0	968	1.9	200	**CMM 063/130**	**B5/B14**
	5.6	1178	1.4	250		**B5/B14**
	4.7	1278	1.6	300		**B5/B14**
	3.5	1626	1.1	400		**B5/B14**
	2.3	2407	0.9	600		**B5/B14**
90S4 (1400 min^{-1})	**19**	406	4.1	75	**CMM 063/130**	**B5/B14**
	14	529	3.2	100		**B5/B14**
	9.3	745	2.6	150		**B5/B14**
	7.0	968	1.9	200		**B5/B14**
	5.6	1178	1.4	250		**B5/B14**
	4.7	1278	1.6	300		**B5/B14**
	3.5	1626	1.1	400		**B5/B14**
	2.3	2407	0.9	600		**B5/B14**
1.5						
90L4 (1400 min^{-1})	**19**	554	3.0	75	**CMM 063/130**	**B5/B14**
	14	722	2.3	100		**B5/B14**
	9.3	1016	1.9	150		**B5/B14**
	7.0	1320	1.4	200		**B5/B14**
	5.6	1606	1.0	250		**B5/B14**
	4.7	1742	1.2	300		**B5/B14**
1.85						
90LB4 (1400 min^{-1})	**19**	683	2.5	75	**CMM 063/130**	**B5/B14**
	14	890	1.9	100		**B5/B14**
	9.3	1254	1.5	150		**B5/B14**
	7.0	1628	1.1	200		**B5/B14**
	4.7	2149	1.0	300		**B5/B14**

Motori applicabili

IEC Motor adapters

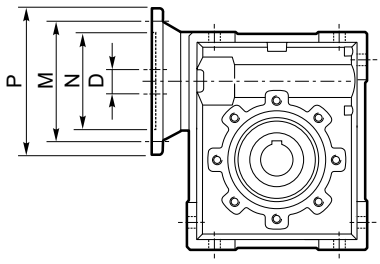

N.B.
Le aree evidenziate in grigio indicano l'applicabilità della corrispondente grandezza motore.
Grey areas indicate motor inputs available on each size of unit.

B/BS = Boccola di riduzione in acciaio
B/BS = Metal shaft sleeve

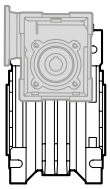
US1

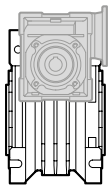
US2

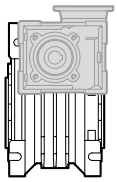
UV1

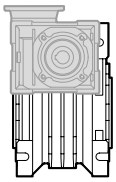
UV2

CMM	IEC	N	M	P	D	i_1						
						10	15	20	30	40	50	60
026/026	**56B14**	50	65	80	9							

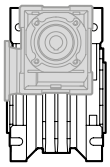
UB1

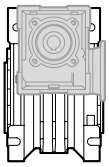
UB2

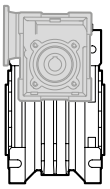
US1

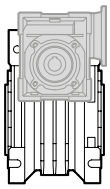
US2

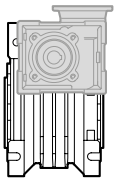
UV1

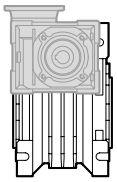
UV2

CMM	IEC	N	M	P	D	i_1						
						10	15	20	30	40	50	60
026/030 **026/040** **026/050**	**56B14**	50	65	80	9							

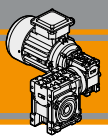

Motori applicabili

IEC Motor adapters

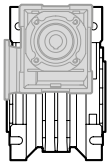

UB1

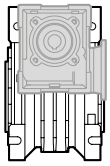

UB2

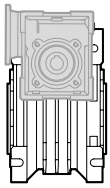

US1

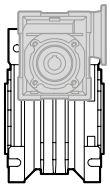

US2

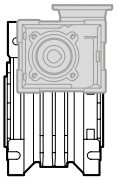

UV1

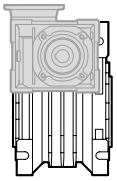

UV2

CMM	IEC	N	M	P	D	i_1								
						7.5	10	15	20	25	30	40	50	60
030/040 030/050 030/063	63B5	95	115	140	11									
	63B14	60	75	90										
	56B5	80	100	120	9	B	B	B	B	B	B	B	B	
	56B14	50	65	80										
040/063 040/070 040/075 040/090	71B5	110	130	160	14									
	71B14	70	85	105										
	63B5	95	115	140	11	B	B	B	B	B	B	B		
	63B14	60	75	90										
	56B5	80	100	120	9	BS	BS	BS	BS	BS	BS	BS	B	B
	56B14	50	65	80										
050/110	80B5	130	165	200	19									
	80B14	80	100	120										
	71B5	110	130	160	14	B	B	B	B	B	B			
	71B14	70	85	105										
	63B5	95	115	140	11	BS	BS	BS	BS	BS	BS	B	B	B
	63B14	60	75	90										
063/130	90B5	130	165	200	24									
	90B14	95	115	140										
	80B5	130	165	200	19	B	B	B	B	B	B			
	80B14	80	100	120										
	71B5	110	130	160	14	BS	BS	BS	BS	BS	BS	B	B	B
	71B14	70	85	105										
	63B5	95	115	140	11							BS	BS	BS

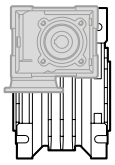

UC1

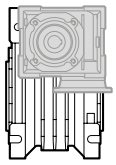

UC2

CMM	IEC	N	M	P	D	i_1								
						7.5	10	15	20	25	30	40	50	60
030/040 030/050	63B14	60	75	90	11									
	56B5	80	100	120	9	B	B	B	B	B	B	B	B	
	56B14	50	65	80										
030/063	63B5	95	115	140	11									
	63B14	60	75	90										
	56B5	80	100	120	9	B	B	B	B	B	B	B		
	56B14	50	65	80										
040/063 040/070 040/075 040/090	71B5	110	130	160	14									
	71B14	70	85	105										
	63B5	95	115	140	11	B	B	B	B	B	B	B		
	63B14	60	75	90										
	56B5	80	100	120	9	BS	BS	BS	BS	BS	BS	BS	B	B
	56B14	50	65	80										
050/110	80B14	80	100	120	19									
	71B5	110	130	160	14	B	B	B	B	B	B			
	71B14	70	85	105										
	63B5	95	115	140	11	BS	BS	BS	BS	BS	BS	B	B	B
	63B14	60	75	90										
063/130	90B14	95	115	140	24									
	80B14	80	100	120	19	B	B	B	B	B	B			
	71B5	110	130	160	14	BS	BS	BS	BS	BS	BS	B	B	B
	71B14	70	85	105										
	63B5	95	115	140	11							BS	BS	BS

Dimensioni — *Dimensions*

	CMM..U - CMM..F - CMM..FB - CMM..FL																
	A	C	D H8	E	F	G	G1	H	H1	I	I1	K	L	M	N h8	N1	N2
026/026	45	70	12	83	22	47.5	50	35	34	26	26	34	42	55	45	22.5	21
026/030	54	80	14	97	32	47.5	63	40	34	30	26	44	56	65	55	29	21
026/040	70	100	18	121.5	43	47.5	78	50	34	40	26	60	71	75	60	36.5	21
026/050	80	120	25	144	49	47.5	92	60	34	50	26	70	85	85	70	43.5	21

	CMM..U - CMM..F - CMM..FB - CMM..FL													
	O	P	Q	R	R1	S	T	V	Z	KE	a	b	t	Kg
026/026	6	—	37	49	49	5	15	21	76	7	—	4	13.8	1.6
026/030	6.5	75	44	57	49	5.5	22	27	81	M6x10(n.4)	90°	5	16.3	2.4
026/040	6.5	87	55	71.5	49	6.5	26	35	91.5	M6x8(n.4)	45°	6	20.8	3.5
026/050	8.5	98	64	84	49	7	30	40	100.5	M8x10(n.4)	45°	8	28.3	5.0

		CMM..F								CMM..FB								CMM..FL							
	a1	KA	KB	KC	KM	KN H8	KO	KP	KQ	KA	KB	KC	KM	KN H8	KO	KP	KQ	KA	KB	KC	KM	KN H8	KO	KP	KQ
026/026	45°	45	6	4.5	55-69	40	6.5(n.4)	75	70	—	—	—	—	—	—	—	—	—	—	—	—	—	—	—	—
026/030	45°	54.5	6	4	68	50	6.5(n.4)	80	70								—								
026/040	45°	67	7.5	4.5	80-95	60	9(n.4)	110	95	80	8.5	5	115-125	95	9.5(n.4)	140	112	97	7.5	4.5	80-95	60	9(n.4)	110	95
026/050	45°	90	9	5	90-110	70	11(n.4)	125	110	89	9	5	130-145	110	9.5(n.4)	160	132	120	9	5	90-110	70	11(n.4)	125	110

	CMMIS					
	A	B	D1 j6	E	F	M
026/026 026/030 026/040 026/050	45	20	9	M4	3	10.2

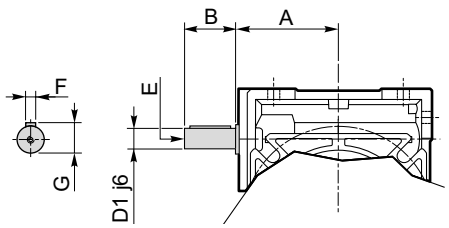

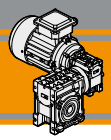

Dimensioni ***Dimensions***

CMM026/..U

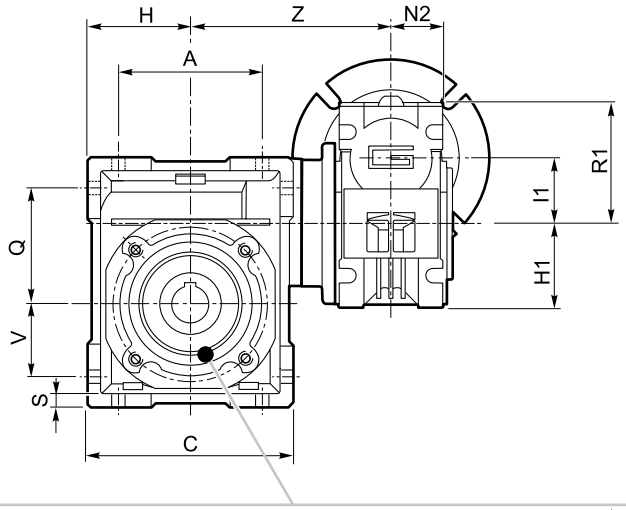

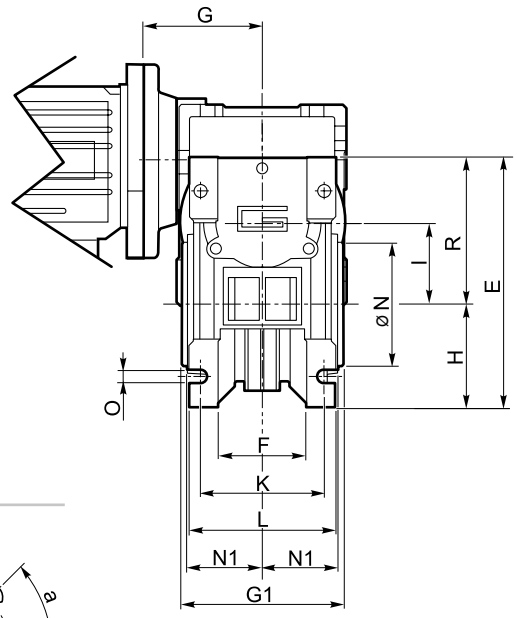

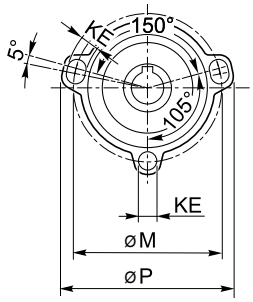

..026/026

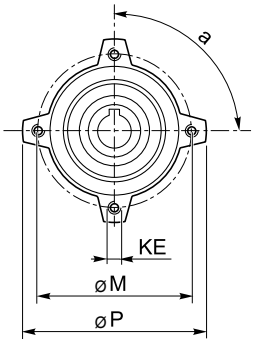

..026/030

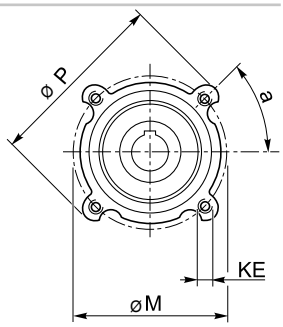

..026/040
..026/050

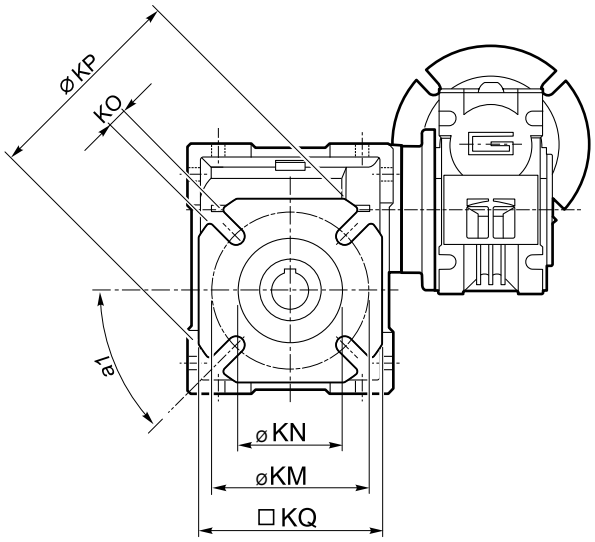

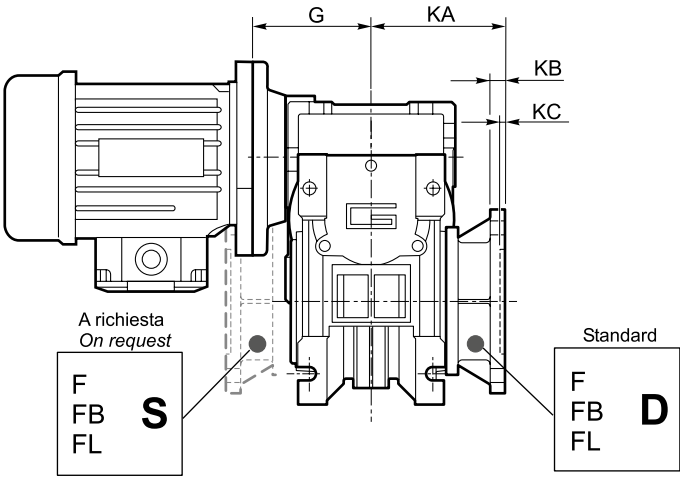

CMM026/..F
CMM026/..FB
CMM026/..FL

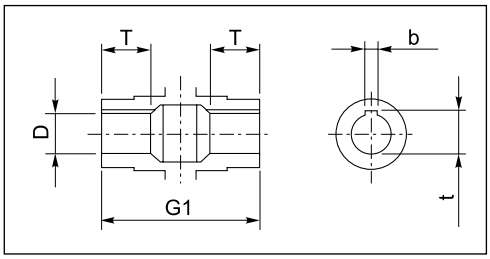

Albero lento cavo / *Hollow output shaft*

Dimensioni — *Dimensions*

	CMM.. - CMM..F - CMM..FB - CMM..FL																
	A	C	D H8	E	F	G	G1	H	H1	I	I1	K	L	M	N h8	N1	N2
030/040	70	100	18	121.5	43	55	78	50	40	40	30	60	71	75	60	36.5	29
030/050	80	120	25	144	49	55	92	60	40	50	30	70	85	85	70	43.5	29
030/063	100	144	25	174	67	55	112	72	40	63	30	85	104	95	80	53	29
040/063	100	144	25	174	67	55	112	72	50	63	40	85	104	95	80	53	36.5
040/070	110	160	28	195	64	70	120	80	50	70	40	90	104	115	95	57	36.5
040/075	120	172	28	205	72	70	120	86	50	75	40	90	112	115	95	57	36.5
040/090	140	208	35	238	74	70	140	103	50	90	40	100	130	130	110	67	36.5
050/110	170	252.5	42	295	—	80	155	127.5	60	110	50	115	144	165	130	74	43.5
063/130	200	292.5	45	335	—	95	170	147.5	72	130	63	120	155	215	180	81	53

	CMM.. - CMM..F - CMM..FB - CMM..FL													
	O	P	Q	R	R1	S	T	V	Z	KE	a	b	t	Kg
030/040	6.5	87	55	71.5	57	6.5	26	35	122	M6x8(n.4)	45°	6	20.8 (21.8)	3.9
030/050	8.5	98	64	84	57	7	30	40	132	M8x14(n.4)	45°	8	28.3 (27.3)	5.0
030/063	8.5	110	80	102	57	8	36	50	145	M8x10(n.8)	45°	8	28.3	7.5
040/063	8.5	110	80	102	71.5	8	36	50	155.5	M8x10(n.8)	45°	8	28.3	9.2
040/070	9	130	91	115	71.5	9	40	55	160	M8x14(n.8)	45°	8	31.3	10.5
040/075	11	140	93	119	71.5	10	40	60	165	M8x14(n.8)	45°	8	31.3	12.0
040/090	13	160	102	135	71.5	11	45	70	182	M10x18(n.8)	45°	10	38.3	15.6
050/110	14	200	125	167.5	84	14	50	85	225	M10x18(n.8)	45°	12	45.3	30.2
063/130	16	250	140	187.5	102	15	60	100	245	M12x21(n.8)	45°	14	48.8	55.0

		CMM..F								CMM..FB								CMM..FL							
	a1	KA	KB	KC	KM	KN H8	KO	KP	KQ	KA	KB	KC	KM	KN H8	KO	KP	KQ	KA	KB	KC	KM	KN H8	KO	KP	KQ
030/040	45°	67	7.5	4	80-95	60	9(n.4)	110	95	80	8.5	5	115-125	95	9.5(n.4)	140	112	97	7.5	4.5	80-95	60	9(n.4)	110	95
030/050	45°	90	9	5	90-110	70	11(n.4)	125	110	89	9	5	130-145	110	9.5(n.4)	160	132	120	9	5	90-110	70	11(n.4)	125	110
030/063	45°	82	10	6	150-160	115	11(n.4)	180	142	98	10	5	165-180	130	11(n.4)	200	160	112	10	6	150-160	115	11(n.4)	180	142
040/063	45°	82	10	6	150-160	115	11(n.4)	180	142	98	10	5	165-180	130	11(n.4)	200	160	112	10	6	150-160	115	11(n.4)	180	142
040/070	45°	111	13	6	165-180	130	14(n.4)	200	170	—	—	—	—	—	—	—	—	—	—	—	—	—	—	—	—
040/075	45°	111	13	6	165-180	130	14(n.4)	200	170	—	—	—	—	—	—	—	—	—	—	—	—	—	—	—	—
040/090	45°	111	13	6	175-190	152	14(n.4)	210	200	—	—	—	—	—	—	—	—	—	—	—	—	—	—	—	—
050/110	45°	131	15	6	230	170	14(n.8)	280	260	—	—	—	—	—	—	—	—	—	—	—	—	—	—	—	—
063/130	22.5°	140	15	6	255	180	16(n.8)	320	290	—	—	—	—	—	—	—	—	—	—	—	—	—	—	—	—

	CMMIS					
	A	B	D1 j6	E	F	M
030/040 030/050 030/063	51	20	9	M4	3	10.2
040/063 040/070 040/075 040/090	66	23	11	M5	4	12.5
050/110	76	30	14	M6	5	16
063/130	94.5	40	19	M6	6	21.5

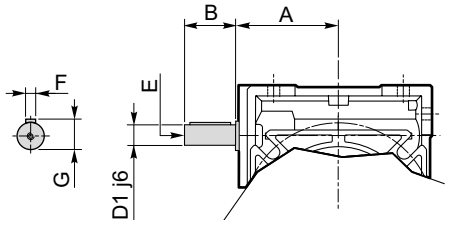

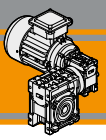

Dimensioni — *Dimensions*

CMM..U

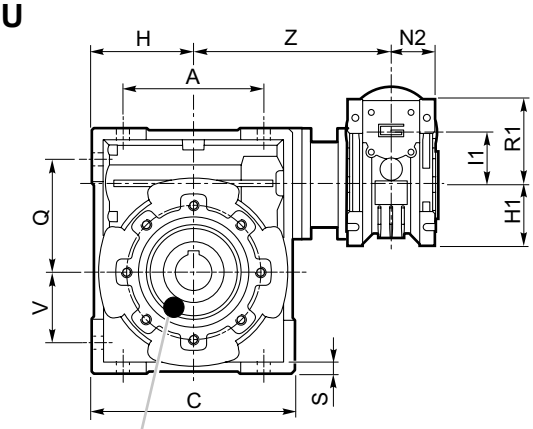

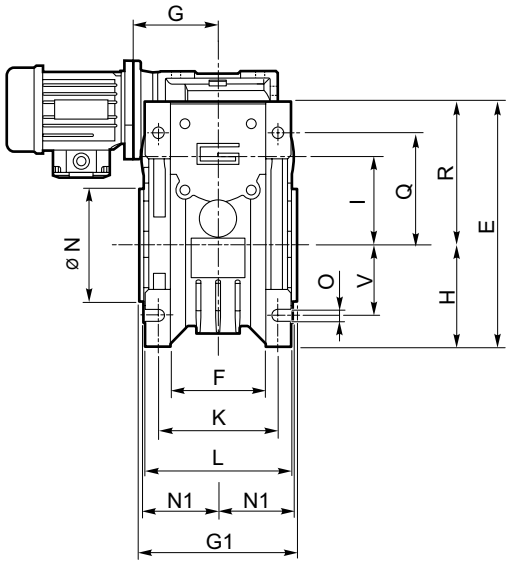

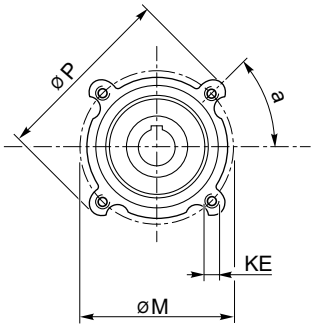

..030/040
..030/050

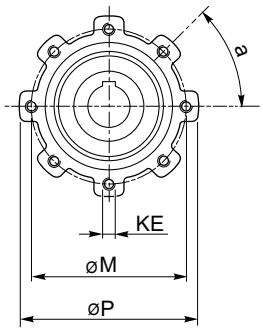

..030/063 ..040/063
..040/070 ..040/075
..040/090 ..050/110
..063/130

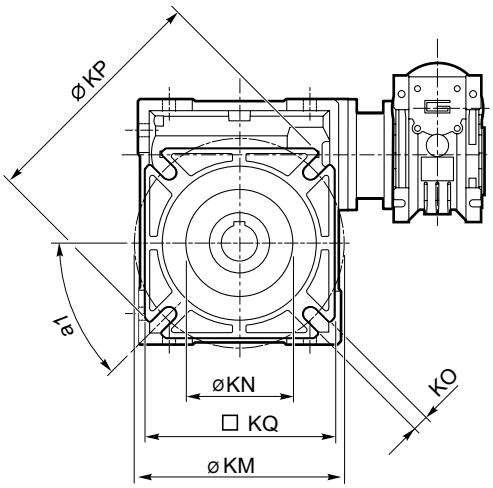

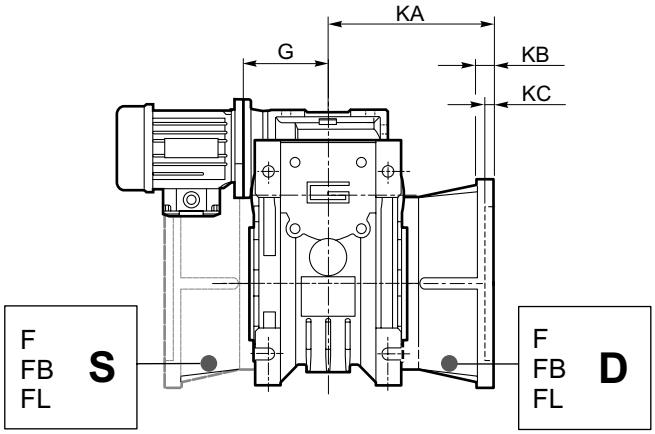

CMM..F (../030 - ../090)
CMM..FB (../040 - ../063)
CMM..FL (../040 - ../063)

CMM..F
(../110 ../130)

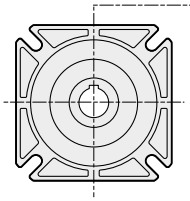

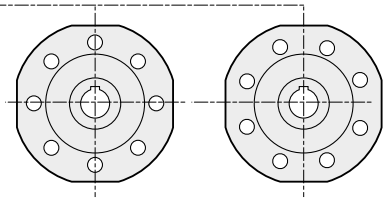

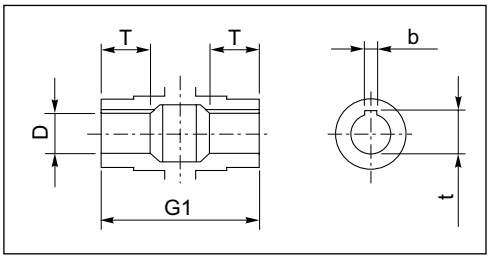

Albero lento cavo / *Hollow output shaft*

Accessori — *Accessories*

Albero lento semplice e doppio — *Single and double output shaft*

CMM 026/030 - CMM 063/130

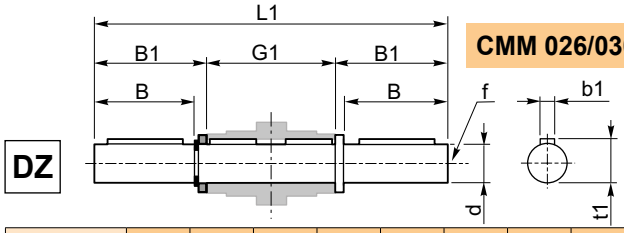

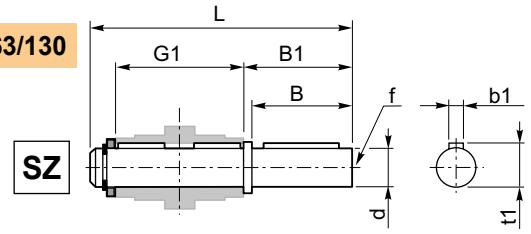

CMM	d h7	B	B1	G1	L	L1	f	b1	t1
026/030	14	30	32.5	63	102	128	M6	5	16
026/040 030/040	18	40	43	78	128	164	M6	6	20.5
026/050 030/050	25	50	53.5	92	153	199	M10	8	28
030/063 040/063	25	50	53.5	112	173	219	M10	8	28
040/070	28	60	63.5	120	192	247	M10	8	31
040/075	28	60	63.5	120	192	247	M10	8	31
040/090	35	80	84.5	140	234	309	M12	10	38
050/110	42	80	84.5	155	249	324	M16	12	45
063/130	45	80	85	170	265	340	M16	14	48.5

CMM 026/026

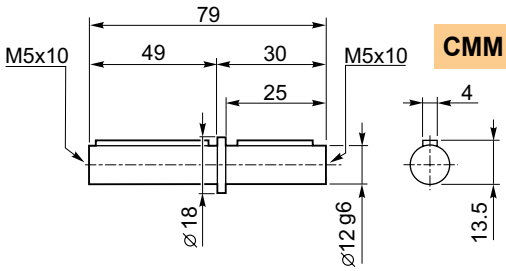

Braccio di reazione — *Torque arm*

CMM	K1	G	KG	KH	R
026/030	85	14	23	8	15
026/040 030/040	100	14	31	10	18
026/050 030/050	100	14	38	10	18
030/063 040/063	150	14	47.5	10	18
040/070	200	25	46.5	20	30
040/075	200	25	46.5	20	30
040/090	200	25	56.5	20	30
050/110	250	30	62	25	35
063/130	250	30	69	25	35

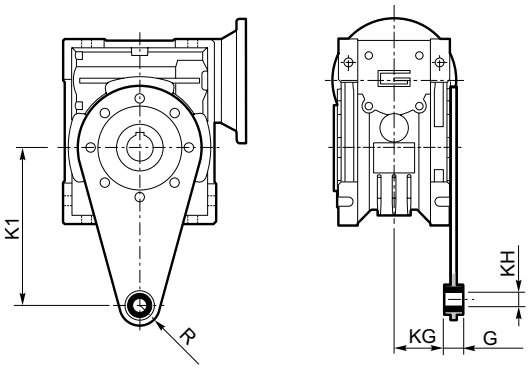

Opzioni — *Options*

VS1 - VS2 - Vite sporgente / *Extended input shaft*

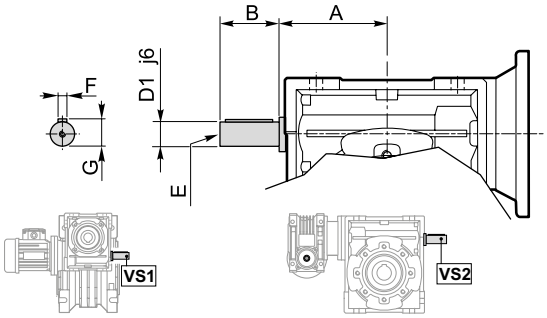

SC - *Safety cover*

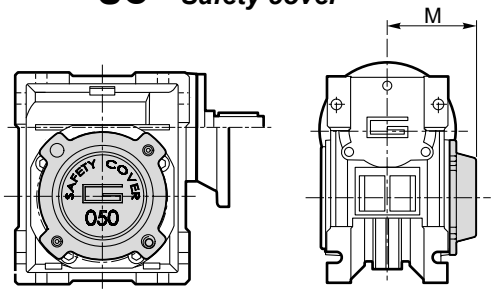

CMM	VS1						VS2					
	A	B	D_1 j6	E	F	G	A	B	D_1 j6	E	F	G
026/030	—	—	—	—	—	—	45	20	9	M4	3	10.2
026/040	—	—	—	—	—	—	53	23	11	M5	4	12.5
026/050	—	—	—	—	—	—	64	30	14	M6	5	16
030/040	45	20	9	M4	3	10.2	53	23	11	M5	4	12.5
030/050	45	20	9	M4	3	10.2	64	30	14	M6	5	16
030/063	45	20	9	M4	3	10.2	75	40	19	M6	6	21.5
040/063	53	23	11	M5	4	12.5	75	40	19	M6	6	21.5
040/070	53	23	11	M5	4	12.5	84	40	19	M6	6	21.5
040/075	53	23	11	M5	4	12.5	90	50	24	M8	8	27
040/090	53	23	11	M5	4	12.5	108	50	24	M8	8	27
050/110	64	30	14	M6	5	16	135	60	28	M10	8	31
063/130	75	40	19	M6	6	21.5	—	—	—	—	—	—

	CM								
	30	40	50	63	70	75	90	110	130
M	47	54.5	62.5	73	75	79	94	102	117

Costruito su richiesta
Built on request

MA TRANSTECNO S.A.P.I. DE C.V.
Av. Mundial # 176, Parque Industrial
JM Apodaca, Nuevo León,
C.P. 66600
MÉXICO
T +52 8113340920
info@transtecno.com.mx
www.transtecno.com.mx

TRANSTECNO SRL
Via Caduti di Sabbiuno, 11/D-E
40011 Anzola dell'Emilia (BO)
ITALY
T+39 051 64 25 811
F +39 051 73 39 04
sales@transtecno.com
www.transtecno.com

HANGZHOU TRANSTECNO POWER TRANSMISSIONS CO LTD
No.4 Xiuyan Road Fengdu Industry Zone
Pingyao Town Yuhang District
Hangzhou City, Zhejiang Province
311115 – CHINA
T +86 571 86 92 02 60
F +86 571 86 92 18 10
info-china@transtecno.com
www.transtecno.cn

CATACALU0118

TRANSTECNO U.S.A. LLC
5440 S.W. 156th Place Miami,
FL 33185 - USA
Tel: +1 (305) 220-4423
Fax: +1 (305) 220-5945
usaoffice@transtecno.com

TRANSTECNO B.V.
Ind. terrein Wieken/Vinkenhoef
De Stuwdam,43
3815 KM Amersfoort - NETHERLANDS
Tel: +31(0) 33 45 19 505
Fax: +31(0) 33 45 19 506
info@transtecno.nl
www.transtecno.nl

SALES OFFICE INDIA
A/10, Anagha, S.N. Road, Mulund (W) Mumbai
400080 - INDIA
Tel: +91 9820614698
Fax-Italy: +39 051 733 904
indiaoffice@transtecno.com

SALES OFFICE BRAZIL
Rua Dr. Freire Alemão 155 / 402 - CEP. 90450-060
Auxiliadora Porto Alegre RS - BRAZIL
Tel: +55 51 3251 5447
Fax: +55 51 3251 5447
Mobile: +55 51 811 45 962
braziloffice@transtecno.com
www.transtecno.com.br

TRANSTECNO IBÉRICA
THE MODULAR GEARMOTOR, S.A.
C/Enginy, 2 Nave 6 - 08850 Gavà (Barcelona) - SPAIN
Tel: +34 931 598 950
info@transtecno.es
www.transtecno.es

SALES OFFICE SOUTH KOREA
D-304 Songdo BRC Smart Valley 30, Songdomirae-ro,
Yeonsu-gu, Incheon, 406-840 - KOREA
Tel: +82 70 8288 2107
Fax: +82 32 815 2107
Mobile: +82 10 5094 2107
koreaoffice@transtecno.com

SALES OFFICE FRANCE
12 Impasse des Mûriers
38300 Ruy - FRANCE
Tel: +33 (0) 6 85 12 09 87
Fax-Italy: +39 051 733 904
franceoffice@transtecno.com
www.transtecno.fr

SALES OFFICE OCEANIA
44 Northview drive, Sunshine west 3020
Victoria - AUSTRALIA
Ph +61 03 9312 4722
Fax +61 03 9312 4714
Mobile: +61 0438060997
oceaniaoffice@transtecno.com
www.transtecno.com.au

TRANSTECNO®
the modular gearmotor

www.transtecno.com

designed by Procedi srl