TRANSTECNO®
the modular gearmotor

CMPU

CMPU

CMPU Alù

Motoriduttori a vite senza fine con precoppia PU
PU pre-stage wormgearmotors

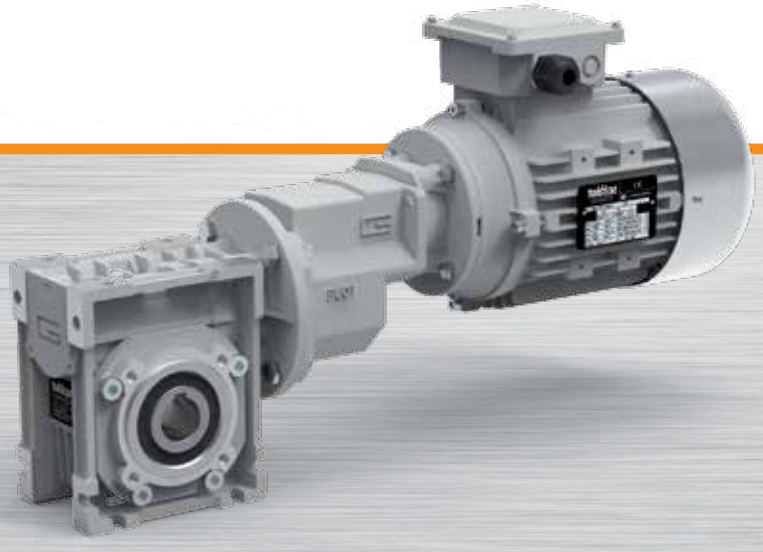

TRANSTECNO · GENUINE · PRODUCTS

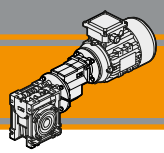

Indice	*Index*	Pag. *Page*
Caratteristiche tecniche	*Technical features*	**L2**
Designazione	*Classification*	**L2**
Sensi di rotazione	*Direction of rotation*	**L3**
Simbologia	*Symbols*	**L3**
Lubrificazione	*Lubrication*	**L4**
Carichi radiali	*Radial loads*	**L4**
Motori applicabili	*IEC Motor adapters*	**L5**
Dati tecnici	*Technical data*	**L6**
Dimensioni	*Dimensions*	**L12**
Accessori	*Accessories*	**L14**
Opzioni	*Options*	**L14**

Questa sezione annulla e sostituisce ogni precedente edizione o revisione. Qualora questa sezione non Vi sia giunta in distribuzione controllata, l'aggiornamento dei dati ivi contenuto non è assicurato. **In tal caso la versione più aggiornata è disponibile sul nostro sito internet www.transtecno.com**

This section replaces any previous edition and revision. If you obtained this catalogue other than through controlled distribution channels, the most up to date content is not guaranteed. ***In this case the latest version is available on our web site www.transtecno.com***

Caratteristiche tecniche

Technical features

L'elevata modularità contraddistingue i motoriduttori a vite senza fine della serie CMPU: i diversi kit entrata ed uscita li rendono estremamente versatili.
Le caratteristiche principali della serie CMPU sono:

- Carcassa in alluminio pressofuso
- Le grandezze 090 è fornita con cuscinetti a rulli conici sulla vite
- Lubrificazione permanente con olio sintetico

The high degree of modularity is a design feature of CMPU wormgearmotors range thanks to a wide selection of input and output kits. Main features of CMPU range are:

- *Die cast aluminium housing*
- *Double taper roller bearing on size 090*
- *Permanent synthetic oil long life lubrication*

Designazione

Classification

RIDUTTORE A VITE SENZA FINE CON PRECOPPIA / *PRE-STAGE WORMGEARBOX*

CMPU	01/050	U	57	71	B14	SZDX	BRSX	90	P4	M1	VS
Tipo *Type*	Grandezza *Size*	Versione riduttore *Gearbox Version*	Rapporto *Ratio*	IEC	Forma costruttiva *Version*	Albero di uscita *Output shaft*	Braccio di reazione *Torque arm*	Angolo *Angle*	*Pos. di montaggio precoppia Pre stage mounting position*	Pos. di montaggio Mounting position	Opzioni *Options*
CMPU	**01/050** **01/063** **01/070** **01/075** **01/090**	**U** **FD** **FS** **FLD** **FLS** **FBD** **FBS**	Vedere tabella *See tables*	**63** **71** **80**	**B5** **B14**	**SZDX** **SZSX** **DZ**	**BRDX** **BRSX**	**0°** **90°** **180°** **270°**	**P1** **P2** **P3** (standard) **P4**	**M1** (B3) **M2** (V6) **M3** (B8) **M4** (V5) **M6** (B6) **M5** (B7)	**VS**

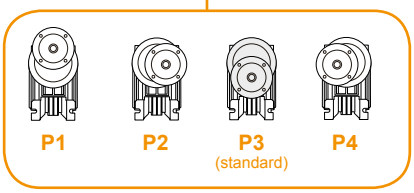

Versione Riduttore
Gearbox Version

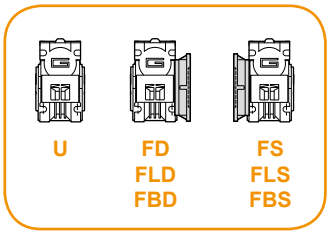

Albero di uscita
Output shaft

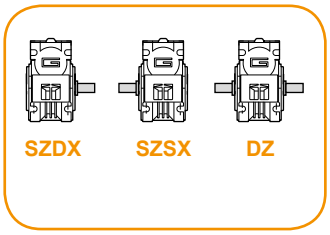

Braccio di reazione
Torque arm

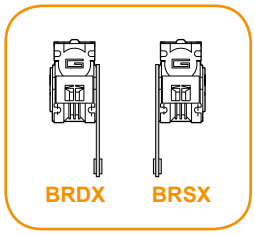

Angolo
Angle

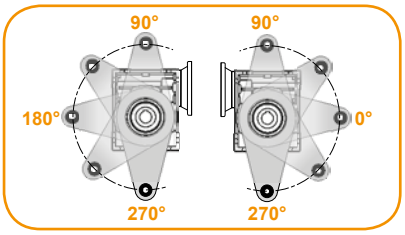

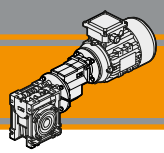

Designazione / *Classification*

MOTORE CM / *CM MOTOR*					
0.75kW	**4p**	**3ph**	**230/400V**	**50Hz**	**T1**
Potenza *Power* Vedi tabelle *See tables*	Poli *Poles* **2p** **4p** **6p** **8p**	Fasi *Phases* **1ph** **3ph**	Tensione *Voltage* **230V** **230/400V**	Frequenza *Frequency* **50Hz** **60Hz**	Pos. morsettiera *Terminal box pos.* **T1** (Std) **T4** **T2** **T3**

Sensi di rotazione / *Direction of rotation*

CMPU

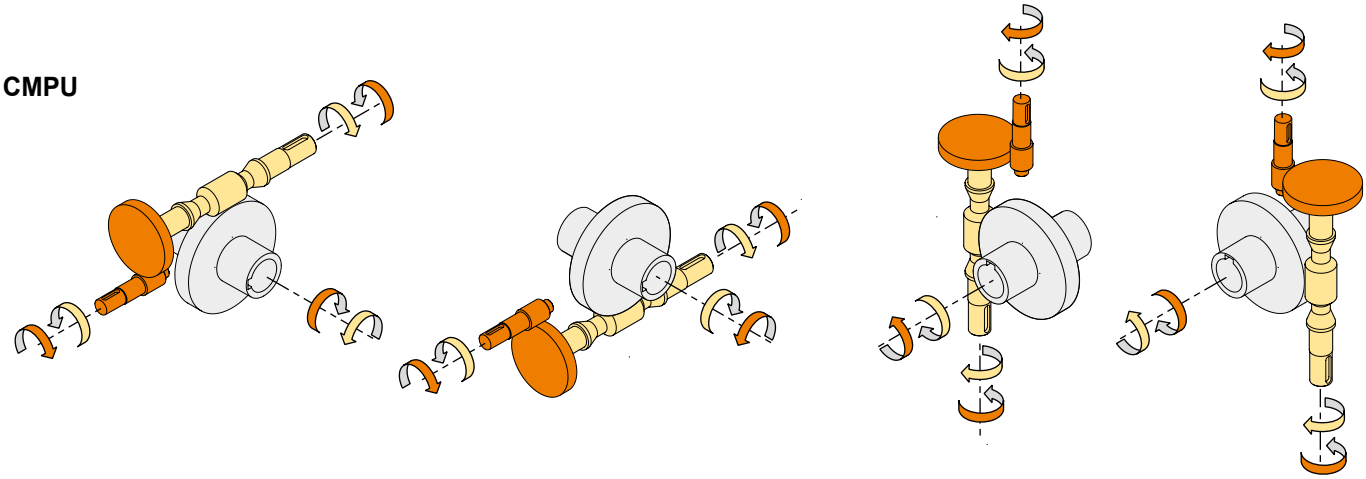

Simbologia / *Symbols*

n_1	[min^{-1}]	Velocità in ingresso / *Input speed*	M_2	[Nm]	Coppia in uscita in funzione di P_1 / *Output torque referred to P_1*
n_2	[min^{-1}]	Velocità in uscita / *Output speed*	sf		Fattore di servizio / *Service factor*
i		Rapporto di riduzione / *Ratio*	R_2	[N]	Carico radiale ammissibile in uscita / *Permitted output radial load*
P_1	[kW]	Potenza in entrata / *Nominal input power*	A_2	[N]	Carico assiale ammissibile in uscita / *Permitted output axial load*

Lubrificazione

Lubrication

Tutti i motoriduttori sono forniti completi di lubrificante sintetico viscosità 320, pertanto possono essere installati in qualunque posizione di montaggio e non necessitano di manutenzione.

Permanent synthetic oil long-life lubrication (viscosity grade 320) makes it possible to use the gearmotors in all mounting positions; for this reason they can be installed in any assembly position and do not require maintenance.

Carichi radiali

Radial loads

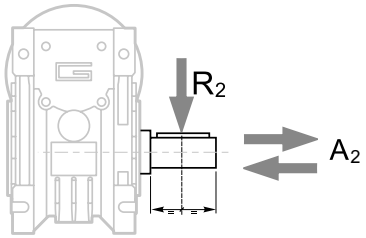

$A_2 = R_2 \times 0.2$

n_2 [min^{-1}]	R_2 [N]				
	CMPU 01/050	CMPU 01/063	CMPU 01/070	CMPU 01/075	CMPU 01/090
47	2805	3874	4141	4475	5009
35	3095	4273	4568	4937	5526
28	3334	4603	4921	5318	5953
23	3559	4915	5254	5678	6356
18	3862	5334	5702	6162	6897
14	4200	5800	6200	6700	7500

Quando il carico radiale risultante non è applicato sulla mezzeria dell'albero occorre calcolare quello effettivo con la seguente formula:

When the resulting radial load is not applied on the centre line of the shaft it is necessary to calculate the effective load with the following formula:

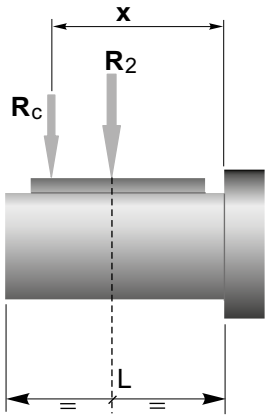

	CMPU				
	01/050	01/063	01/070	01/075	01/090
a	101	120	122	131	182
b	76	95	92	101	122
R_{2MAX}	4200	5800	6200	6700	7500

$$R_c = \frac{R_2 \cdot a}{(b+x)} \leq R_{2MAX}$$

$$R \leq R_c$$

a, b = valori riportati nella tabella
a, b = values given in the table

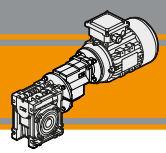

Motori applicabili

IEC Motor adapters

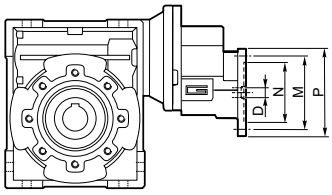

CMPU	IEC	N	M	P	D	i (i_1 x i_2) 28.5 (5,7x5)	42.75 (5,7x7,5)	57 (5,7x10)	64.28 (8,57x7,5)	85.5 (5,7x15)	85.7 (8,57x10)	114 (5,7x20)	128.55 (8,57x15)	142.5 (5,7x25)	171 (5,7x30)	214.25 (8,57x25)
01/050	63B5	95	115	140	11	BS	BS	BS	BS	BS	BS	BS	BS	BS	BS	BS
	63B14	60	75	90												
	71B5	110	130	160	14	B	B	B	B	B	B	B	B	B	B	B
	71B14	70	85	105												
	80B5	130	165	200	19											
	80B14	80	100	120												
01/063	63B5	95	115	140	11	BS	BS	BS	BS	BS	BS	BS	BS	BS	BS	BS
	63B14	60	75	90												
	71B5	110	130	160	14	B	B	B	B	B	B	B	B	B	B	B
	71B14	70	85	105												
	80B5	130	165	200	19											
	80B14	80	100	120												
01/070	63B5	95	115	140	11	-	BS	BS	BS	BS	BS	BS	BS	BS	BS	BS
	63B14	60	75	90												
	71B5	110	130	160	14	-	B	B	B	B	B	B	B	B	B	B
	71B14	70	85	105												
	80B5	130	165	200	19	-										
	80B14	80	100	120												
01/075	63B5	95	115	140	11	-	BS	BS	BS	BS	BS	BS	BS	BS	BS	BS
	63B14	60	75	90												
	71B5	110	130	160	14	-	B	B	B	B	B	B	B	B	B	B
	71B14	70	85	105												
	80B5	130	165	200	19	-										
	80B14	80	100	120												
01/090	63B5	95	115	140	11	-	BS	BS	BS	BS	BS	BS	BS	BS	BS	BS
	63B14	60	75	90												
	71B5	110	130	160	14	-	B	B	B	B	B	B	B	B	B	B
	71B14	70	85	105												
	80B5	130	165	200	19	-										
	80B14	80	100	120												

CMPU	IEC	N	M	P	D	i (i_1 x i_2) 228 (5,7x40)	257.1 (8,57x30)	285 (5,7x50)	342.8 (8,57x40)	428.5 (8,57x50)	456 (5,7x80)	514.2 (8,57x60)	570 (5,7x100)	685.6 (8,57x80)	857 (8,57x100)
01/050	63B5	95	115	140	11		BS								
	63B14	60	75	90											
	71B5	110	130	160	14		B								
	71B14	70	85	105											
	80B5	130	165	200	19										
	80B14	80	100	120											
01/063	63B5	95	115	140	11	BS	BS	BS	BS	BS		BS			
	63B14	60	75	90											
	71B5	110	130	160	14	B	B	B	B	B		B			
	71B14	70	85	105											
	80B5	130	165	200	19										
	80B14	80	100	120											
01/070	63B5	95	115	140	11	BS	BS	BS	BS	BS	BS	BS	BS	BS	BS
	63B14	60	75	90											
	71B5	110	130	160	14	B	B	B	B	B	B	B	B	B	B
	71B14	70	85	105											
	80B5	130	165	200	19										
	80B14	80	100	120											
01/075	63B5	95	115	140	11	BS	BS	BS	BS	BS	BS	BS	BS	BS	BS
	63B14	60	75	90											
	71B5	110	130	160	14	B	B	B	B	B	B	B	B	B	B
	71B14	70	85	105											
	80B5	130	165	200	19										
	80B14	80	100	120											
01/090	63B5	95	115	140	11	BS	BS	BS	BS	BS	BS	BS	BS	BS	BS
	63B14	60	75	90											
	71B5	110	130	160	14	B	B	B	B	B	B	B	B	B	B
	71B14	70	85	105											
	80B5	130	165	200	19										
	80B14	80	100	120											

Le aree evidenziate in grigio indicano l'applicabilità della corrispondente grandezza motore.
N.B. *Grey areas indicate motor inputs available on each size of unit.*

B/BS = Boccola di riduzione in acciaio
B/BS = Metal shaft sleeve

Dati tecnici

Technical data

P_1 [kW]	n_2 [min^{-1}]	M_2 [Nm]	sf	i		IEC
0.18						
63B4	**49**	28	5.3	28.50	**CMPU01/050**	**B5/B14**
(1400 min^{-1})	**33**	41	3.8	42.75		**B5/B14**
	25	52	3.0	57.00		**B5/B14**
	22	61	2.5	64.28		**B5/B14**
	16	79	2.0	85.70		**B5/B14**
	12	93	1.5	114.00		**B5/B14**
	11	112	1.4	128.55		**B5/B14**
	9.8	110	1.1	142.50		**B5/B14**
	8.2	120	1.4	171.00		**B5/B14**
	22	62	4.7	64.28	**CMPU01/063**	**B5/B14**
	16	80	3.6	85.70		**B5/B14**
	12	92	2.8	114.00		**B5/B14**
	11	110	2.8	128.55		**B5/B14**
	9.8	108	2.1	142.50		**B5/B14**
	8.2	124	2.5	171.00		**B5/B14**
	6.5	163	1.4	214.25		**B5/B14**
	6.1	148	1.8	228.00		**B5/B14**
	5.4	186	1.7	257.10		**B5/B14**
	4.9	172	1.4	285.00		**B5/B14**
	4.1	223	1.2	342.80		**B5/B14**
	3.3	258	0.9	428.50		**B5/B14**
	12	93	4.2	114.00	**CMPU01/070**	**B5/B14**
	11	112	3.9	128.55		**B5/B14**
	9.8	112	3.1	142.50		**B5/B14**
	8.2	124	3.7	171.00		**B5/B14**
	6.5	168	2.0	214.25		**B5/B14**
	6.1	148	2.6	228.00		**B5/B14**
	5.4	186	2.4	257.10		**B5/B14**
	4.9	172	2.0	285.00		**B5/B14**
	4.1	223	1.7	342.80		**B5/B14**
	3.3	258	1.3	428.50		**B5/B14**
	3.1	220	1.2	456.00		**B5/B14**
	2.7	285	1.1	514.20		**B5/B14**
	2.5	247	0.9	570.00		**B5/B14**
	2.0	331	0.8	685.60		**B5/B14**

P_1 [kW]	n_2 [min^{-1}]	M_2 [Nm]	sf	i		IEC
0.18						
63B4	**12**	95	4.9	114.00	**CMPU01/075**	**B5/B14**
(1400 min^{-1})	**11**	113	4.7	128.55		**B5/B14**
	9.8	112	3.7	142.50		**B5/B14**
	8.2	124	4.4	171.00		**B5/B14**
	6.5	168	2.4	214.25		**B5/B14**
	6.1	151	3.1	228.00		**B5/B14**
	5.4	186	2.9	257.10		**B5/B14**
	4.9	172	2.3	285.00		**B5/B14**
	4.1	227	2.1	342.80		**B5/B14**
	3.3	258	1.6	428.50		**B5/B14**
	3.1	220	1.5	456.00		**B5/B14**
	2.7	291	1.3	514.20		**B5/B14**
	2.5	247	1.2	570.00		**B5/B14**
	2.0	331	1.0	685.60		**B5/B14**
	1.6	372	0.8	857.00		**B5/B14**
	6.5	178	4.0	214.25	**CMPU01/090**	**B5/B14**
	6.1	159	5.1	228.00		**B5/B14**
	5.4	195	4.8	257.10		**B5/B14**
	4.9	186	3.7	285.00		**B5/B14**
	4.1	240	3.4	342.80		**B5/B14**
	3.3	279	2.5	428.50		**B5/B14**
	3.1	242	2.2	456.00		**B5/B14**
	2.7	316	2.0	514.20		**B5/B14**
	2.5	268	1.8	570.00		**B5/B14**
	2.0	364	1.5	685.60		**B5/B14**
	1.6	403	1.2	857.00		**B5/B14**

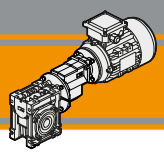

Dati tecnici

Technical data

P_1 [kW]	n_2 [min^{-1}]	M_2 [Nm]	sf	i		IEC
0.22						
63C4	**49**	34	4.4	28.50	**CMPU01/050**	**B5/B14**
(1400 min^{-1})	**33**	50	3.1	42.75		**B5/B14**
	25	64	2.4	57.00		**B5/B14**
	22	75	2.1	64.28		**B5/B14**
	16	96	1.6	85.70		**B5/B14**
	12	114	1.2	114.00		**B5/B14**
	11	136	1.2	128.55		**B5/B14**
	9.8	134	0.9	142.50		**B5/B14**
	8.2	146	1.1	171.00		**B5/B14**
	25	65	4.4	57.00	**CMPU01/063**	**B5/B14**
	22	76	3.9	64.28		**B5/B14**
	16	97	3.0	85.70		**B5/B14**
	12	112	2.3	114.00		**B5/B14**
	11	134	2.3	128.55		**B5/B14**
	9.8	132	1.7	142.50		**B5/B14**
	8.2	151	2.1	171.00		**B5/B14**
	6.5	198	1.2	214.25		**B5/B14**
	6.1	181	1.4	228.00		**B5/B14**
	5.4	227	1.4	257.10		**B5/B14**
	4.9	209	1.1	285.00		**B5/B14**
	4.1	272	1.0	342.80		**B5/B14**

P_1 [kW]	n_2 [min^{-1}]	M_2 [Nm]	sf	i		IEC
0.22						
63C4	**16**	98	4.3	85.70	**CMPU01/070**	**B5/B14**
(1400 min^{-1})	**12**	114	3.4	114.00		**B5/B14**
	11	136	3.2	128.55		**B5/B14**
	9.8	136	2.5	142.50		**B5/B14**
	8.2	151	3.0	171.00		**B5/B14**
	6.5	205	1.7	214.25		**B5/B14**
	6.1	181	2.1	228.00		**B5/B14**
	5.4	227	2.0	257.10		**B5/B14**
	4.9	209	1.6	285.00		**B5/B14**
	4.1	272	1.4	342.80		**B5/B14**
	3.3	315	1.1	428.5		**B5/B14**
	3.1	268	1.0	456.00		**B5/B14**
	2.7	348	0.9	514.20		**B5/B14**
	2.5	302	0.8	570.00		**B5/B14**
	16	98	5.1	85.70	**CMPU01/075**	**B5/B14**
	12	116	4.0	114.00		**B5/B14**
	11	138	3.8	128.55		**B5/B14**
	9.8	136	3.0	142.50		**B5/B14**
	8.2	151	3.6	171.00		**B5/B14**
	6.5	205	2.0	214.25		**B5/B14**
	6.1	184	2.5	228.00		**B5/B14**
	5.4	227	2.4	257.10		**B5/B14**
	4.9	209	1.9	285.00		**B5/B14**
	4.1	277	1.7	342.80		**B5/B14**
	3.3	315	1.3	428.5		**B5/B14**
	3.1	268	1.2	456.00		**B5/B14**
	2.7	355	1.1	514.20		**B5/B14**
	2.5	302	1.0	570.00		**B5/B14**
	2.0	403	0.8	685.60		**B5/B14**
	9.8	145	4.9	142.50	**CMPU01/090**	**B5/B14**
	6.5	217	3.3	214.25		**B5/B14**
	6.1	194	4.2	228.00		**B5/B14**
	5.4	238	4.0	257.10		**B5/B14**
	4.9	226	3.0	285.00		**B5/B14**
	4.1	292	2.8	342.80		**B5/B14**
	3.3	340	2.0	428.50		**B5/B14**
	3.1	295	1.8	456.00		**B5/B14**
	2.7	385	1.6	514.20		**B5/B14**
	2.5	327	1.5	570.00		**B5/B14**
	2.0	443	1.2	685.60		**B5/B14**
	1.6	491	1.0	857.00		**B5/B14**

Dati tecnici

Technical data

P_1 [kW]	n_2 [min^{-1}]	M_2 [Nm]	sf	i		IEC
0.25						
71A4	**49**	39	3.9	28.5	**CMPU01/050**	**B5/B14**
(1400 min^{-1})	**33**	56	2.8	42.75		**B5/B14**
	25	72	2.1	57.00		**B5/B14**
	22	85	1.8	64.28		**B5/B14**
	16	109	1.4	85.70		**B5/B14**
	12	129	1.1	114.00		**B5/B14**
	11	154	1.0	128.55		**B5/B14**
	9.8	152	0.8	142.50		**B5/B14**
	8.2	165	1.0	171.00		**B5/B14**
	25	73	3.9	57.00	**CMPU01/063**	**B5/B14**
	22	86	3.4	64.28		**B5/B14**
	16	110	2.6	85.70		**B5/B14**
	12	127	2.0	114.00		**B5/B14**
	11	152	2.0	128.55		**B5/B14**
	9.8	150	1.5	142.50		**B5/B14**
	8.2	171	1.8	171.00		**B5/B14**
	6.5	225	1.0	214.25		**B5/B14**
	6.1	205	1.3	228.00		**B5/B14**
	5.4	257	1.2	257.10		**B5/B14**
	4.9	237	1.0	285.00		**B5/B14**
	4.1	308	0.8	342.80		**B5/B14**
	16	111	3.8	85.70	**CMPU01/070**	**B5/B14**
	12	129	3.0	114.00		**B5/B14**
	11	154	2.8	128.55		**B5/B14**
	9.8	154	2.2	142.50		**B5/B14**
	8.2	171	2.7	171.00		**B5/B14**
	6.5	232	1.5	214.25		**B5/B14**
	5.4	257	1.8	257.10		**B5/B14**
	6.1	205	1.8	228.00		**B5/B14**
	4.9	237	1.4	285.00		**B5/B14**
	4.1	308	1.2	342.80		**B5/B14**
	3.3	357	0.9	428.50		**B5/B14**
	3.1	304	0.9	456.00		**B5/B14**
	2.7	394	0.8	514.20		**B5/B14**

P_1 [kW]	n_2 [min^{-1}]	M_2 [Nm]	sf	i		IEC
0.25						
71A4	**16**	111	4.5	85.70	**CMPU01/075**	**B5/B14**
(1400 min^{-1})	**12**	131	3.6	114.00		**B5/B14**
	11	156	3.4	128.55		**B5/B14**
	9.8	154	2.7	142.50		**B5/B14**
	8.2	171	3.2	171.00		**B5/B14**
	6.5	232	1.8	214.25		**B5/B14**
	5.4	257	2.1	257.10		**B5/B14**
	6.1	209	2.2	228.00		**B5/B14**
	4.9	237	1.7	285.00		**B5/B14**
	4.1	314	1.5	342.80		**B5/B14**
	3.3	357	1.1	428.50		**B5/B14**
	3.1	304	1.1	456.00		**B5/B14**
	2.7	403	0.9	514.20		**B5/B14**
	2.5	342	0.8	570.00		**B5/B14**
	9.8	164	4.3	142.50	**CMPU01/090**	**B5/B14**
	8.2	179	5.3	171.00		**B5/B14**
	6.5	246	2.9	214.25		**B5/B14**
	6.1	220	3.7	228.00		**B5/B14**
	5.4	270	3.5	257.10		**B5/B14**
	4.9	256	2.7	285.00		**B5/B14**
	4.1	331	2.5	342.80		**B5/B14**
	3.3	385	1.8	428.50		**B5/B14**
	3.1	334	1.6	456.00		**B5/B14**
	2.7	437	1.4	514.20		**B5/B14**
	2.5	370	1.3	570.00		**B5/B14**
	2.0	503	1.1	685.60		**B5/B14**
	1.6	557	0.9	857.00		**B5/B14**

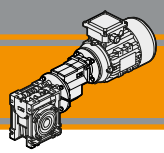

Dati tecnici

Technical data

P_1 [kW]	n_2 [min^{-1}]	M_2 [Nm]	sf	i		IEC
0.37						
71B4	**49**	58	2.6	28.50	**CMPU01/050**	**B5/B14**
(1400 min^{-1})	**33**	83	1.9	42.75		**B5/B14**
	25	107	1.4	57.00		**B5/B14**
	22	125	1.2	64.28		**B5/B14**
	16	161	1.0	85.70		**B5/B14**
	49	58	4.8	28.50	**CMPU01/063**	**B5/B14**
	33	84	3.5	42.75		**B5/B14**
	25	108	2.6	57.00		**B5/B14**
	22	127	2.3	64.28		**B5/B14**
	16	163	1.8	85.70		**B5/B14**
	12	189	1.4	114.00		**B5/B14**
	11	225	1.3	128.55		**B5/B14**
	9.8	222	1.0	142.50		**B5/B14**
	8.2	253	1.2	171.00		**B5/B14**
	6.5	333	0.7	214.25		**B5/B14**
	6.1	304	0.9	228.00		**B5/B14**
	5.4	381	0.8	257.10		**B5/B14**
	4.9	352	0.7	285.00		**B5/B14**
	25	110	3.8	57.00	**CMPU01/070**	**B5/B14**
	22	129	3.1	64.28		**B5/B14**
	16	165	2.5	85.70		**B5/B14**
	12	191	2.0	114.00		**B5/B14**
	11	229	1.9	128.55		**B5/B14**
	9.8	229	1.5	142.50		**B5/B14**
	8.2	253	1.8	171.00		**B5/B14**
	6.5	344	1.0	214.25		**B5/B14**
	6.1	304	1.2	228.00		**B5/B14**
	5.4	381	1.2	257.10		**B5/B14**
	4.9	352	1.0	285.00		**B5/B14**
	4.1	457	0.8	342.80		**B5/B14**

P_1 [kW]	n_2 [min^{-1}]	M_2 [Nm]	sf	i		IEC
0.37						
71B4	**25**	110	4.6	57.00	**CMPU01/075**	**B5/B14**
(1400 min^{-1})	**22**	129	3.8	64.28		**B5/B14**
	16	165	3.0	85.70		**B5/B14**
	12	194	2.4	114.00		**B5/B14**
	11	232	2.3	128.55		**B5/B14**
	9.8	229	1.8	142.50		**B5/B14**
	8.2	253	2.2	171.00		**B5/B14**
	6.5	344	1.2	214.25		**B5/B14**
	6.1	310	1.5	228.00		**B5/B14**
	5.4	381	1.4	257.10		**B5/B14**
	4.9	352	1.1	285.00		**B5/B14**
	4.1	466	1.0	342.80		**B5/B14**
	3.3	529	0.8	428.50		**B5/B14**
	16	169	4.4	85.70	**CMPU01/090**	**B5/B14**
	12	203	4.0	114.00		**B5/B14**
	11	238	3.7	128.55		**B5/B14**
	9.8	243	2.9	142.50		**B5/B14**
	8.2	266	3.5	171.00		**B5/B14**
	6.5	365	1.9	214.25		**B5/B14**
	6.1	327	2.5	228.00		**B5/B14**
	5.4	400	2.4	257.10		**B5/B14**
	4.9	380	1.8	285.00		**B5/B14**
	4.1	491	1.7	342.80		**B5/B14**
	3.3	571	1.2	428.50		**B5/B14**
	3.1	496	1.1	456.00		**B5/B14**
	2.7	648	1.0	514.20		**B5/B14**
	2.5	549	0.9	570.00		**B5/B14**

Dati tecnici

Technical data

P_1 [kW]	n_2 [min^{-1}]	M_2 [Nm]	sf	i		IEC
0.55						
71C4	**49**	86	1.7	28.50	**CMPU01/050**	**B5/B14**
(1400 min^{-1})	**33**	124	1.3	42.75		**B5/B14**
	25	159	1.0	57.00		**B5/B14**
	22	187	0.8	64.28		**B5/B14**
	49	86	3.2	28.50	**CMPU01/063**	**B5/B14**
	33	126	2.3	42.75		**B5/B14**
	25	161	1.8	57.00		**B5/B14**
	22	189	1.5	64.28		**B5/B14**
	16	243	1.2	85.70		**B5/B14**
	12	281	0.9	114.00		**B5/B14**
	11	335	0.9	128.55		**B5/B14**
	9.8	330	0.7	142.50		**B5/B14**
	8.2	377	0.8	171.00		**B5/B14**
	33	127	3.2	42.75	**CMPU01/070**	**B5/B14**
	25	163	2.6	57.00		**B5/B14**
	22	191	2.1	64.28		**B5/B14**
	16	246	1.7	85.70		**B5/B14**
	12	285	1.4	114.00		**B5/B14**
	11	340	1.3	128.55		**B5/B14**
	9.8	340	1.0	142.50		**B5/B14**
	8.2	377	1.2	171.00		**B5/B14**
	6.5	512	0.7	214.25		**B5/B14**
	6.1	452	0.8	228.00		**B5/B14**
	5.4	567	0.8	257.10		**B5/B14**
	33	127	3.8	42.75	**CMPU01/075**	**B5/B14**
	25	163	3.1	57.00		**B5/B14**
	22	191	2.5	64.28		**B5/B14**
	16	246	2.0	85.70		**B5/B14**
	12	289	1.6	114.00		**B5/B14**
	11	345	1.5	128.55		**B5/B14**
	9.8	340	1.2	142.50		**B5/B14**
	8.2	377	1.5	171.00		**B5/B14**
	6.5	512	0.8	214.25		**B5/B14**
	6.1	461	1.0	228.00		**B5/B14**
	5.4	567	1.0	257.10		**B5/B14**
	4.9	524	0.8	285.00		**B5/B14**

P_1 [kW]	n_2 [min^{-1}]	M_2 [Nm]	sf	i		IEC
0.55						
80A4	**25**	168	4.5	57.00	**CMPU01/090**	**B5/B14**
(1400 min^{-1})	**22**	196	3.6	64.28		**B5/B14**
	16	252	3.0	85.70		**B5/B14**
	12	302	2.7	114.00		**B5/B14**
	11	354	2.5	128.55		**B5/B14**
	9.8	361	2.0	142.50		**B5/B14**
	8.2	396	2.4	171.00		**B5/B14**
	6.5	543	1.3	214.25		**B5/B14**
	6.1	486	1.7	228.00		**B5/B14**
	5.4	595	1.6	257.10		**B5/B14**
	4.9	566	1.2	285.00		**B5/B14**
	4.1	731	1.1	342.80		**B5/B14**
	3.3	850	0.8	428.50		**B5/B14**
	49	86	1.7	28.50	**CMPU01/050**	**B5/B14**
	33	124	1.3	42.75		**B5/B14**
	25	159	1.0	57.00		**B5/B14**
	22	187	0.8	64.28		**B5/B14**
	49	86	3.2	28.50	**CMPU01/063**	**B5/B14**
	33	126	2.3	42.75		**B5/B14**
	25	161	1.8	57.00		**B5/B14**
	22	189	1.5	64.28		**B5/B14**
	16	243	1.2	85.70		**B5/B14**
	12	281	0.9	114.00		**B5/B14**
	11	335	0.9	128.55		**B5/B14**
	9.8	330	0.7	142.50		**B5/B14**
	8.2	377	0.8	171.00		**B5/B14**
	33	127	3.2	42.75	**CMPU01/070**	**B5/B14**
	25	163	2.6	57.00		**B5/B14**
	22	191	2.1	64.28		**B5/B14**
	16	246	1.7	85.70		**B5/B14**
	12	285	1.4	114.00		**B5/B14**
	11	340	1.3	128.55		**B5/B14**
	9.8	340	1.0	142.50		**B5/B14**
	8.2	377	1.2	171.00		**B5/B14**
	6.5	512	0.7	214.25		**B5/B14**
	6.1	452	0.8	228.00		**B5/B14**
	5.4	567	0.8	257.10		**B5/B14**

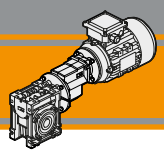

Dati tecnici

Technical data

P_1 [kW]	n_2 [min^{-1}]	M_2 [Nm]	sf	i		IEC
0.55						
80A4	**33**	127	3.8	42.75	**CMPU01/075**	**B5/B14**
(1400 min^{-1})	**25**	163	3.1	57.00		**B5/B14**
	22	191	2.5	64.28		**B5/B14**
	16	246	2.0	85.70		**B5/B14**
	12	289	1.6	114.00		**B5/B14**
	11	345	1.5	128.55		**B5/B14**
	9.8	340	1.2	142.50		**B5/B14**
	8.2	377	1.5	171.00		**B5/B14**
	6.5	512	0.8	214.25		**B5/B14**
	6.1	461	1.0	228.00		**B5/B14**
	5.4	567	1.0	257.10		**B5/B14**
	4.9	524	0.8	285.00		**B5/B14**
	25	168	4.5	57.00	**CMPU01/090**	**B5/B14**
	22	196	3.6	64.28		**B5/B14**
	16	252	3.0	85.70		**B5/B14**
	12	302	2.7	114.00		**B5/B14**
	11	354	2.5	128.55		**B5/B14**
	9.8	361	2.0	142.50		**B5/B14**
	8.2	396	2.4	171.00		**B5/B14**
	6.5	543	1.3	214.25		**B5/B14**
	6.1	486	1.7	228.00		**B5/B14**
	5.4	595	1.6	257.10		**B5/B14**
	4.9	566	1.2	285.00		**B5/B14**
	4.1	731	1.1	342.80		**B5/B14**
	3.3	850	0.8	428.50		**B5/B14**
0.75						
80B4	**49**	117	1.3	28.50	**CMPU01/050**	**B5/B14**
(1400 min^{-1})	**33**	169	0.9	42.75		**B5/B14**
	49	117	2.4	28.50	**CMPU01/063**	**B5/B14**
	33	172	1.7	42.75		**B5/B14**
	25	220	1.3	57.00		**B5/B14**
	22	258	1.1	64.28		**B5/B14**
	16	331	0.9	85.70		**B5/B14**
	12	383	0.7	114.00		**B5/B14**
	11	458	0.7	128.60		**B5/B14**
	33	174	2.3	42.75	**CMPU01/070**	**B5/B14**
	25	223	1.9	57.00		**B5/B14**
	22	261	1.5	64.28		**B5/B14**
	16	335	1.2	85.70		**B5/B14**
	12	389	1.0	114.00		**B5/B14**
	11	464	0.9	128.60		**B5/B14**
	9.8	465	0.7	142.50		**B5/B14**
	8.2	515	0.9	171.00		**B5/B14**

P_1 [kW]	n_2 [min^{-1}]	M_2 [Nm]	sf	i		IEC
0.75						
80B4	**33**	174	2.8	42.75	**CMPU01/075**	**B5/B14**
(1400 min^{-1})	**25**	223	2.3	57.00		**B5/B14**
	22	261	1.9	64.28		**B5/B14**
	16	335	1.5	85.70		**B5/B14**
	12	395	1.2	114.00		**B5/B14**
	11	471	1.1	128.60		**B5/B14**
	9.8	465	0.9	142.50		**B5/B14**
	8.2	515	1.1	171.00		**B5/B14**
	6.1	629	0.7	228.00		**B5/B14**
	33	178	4.0	42.75	**CMPU01/090**	**B5/B14**
	25	229	3.3	57.00		**B5/B14**
	22	268	2.6	64.28		**B5/B14**
	16	344	2.2	85.70		**B5/B14**
	12	412	2.0	114.00		**B5/B14**
	11	484	1.8	128.55		**B5/B14**
	9.8	493	1.4	142.50		**B5/B14**
	8.2	541	1.7	171.00		**B5/B14**
	6.5	742	1.0	214.25		**B5/B14**
	6.1	664	1.2	228.00		**B5/B14**
	5.4	813	1.2	257.10		**B5/B14**
	4.9	772	0.9	285.00		**B5/B14**
	4.1	998	0.8	342.80		**B5/B14**
1.1						
80C4	**49**	172	0.9	28.50	**CMPU01/050**	**B5/B14**
(1400 min^{-1})						
	49	172	1.6	28.50	**CMPU01/063**	**B5/B14**
	33	251	1.2	42.75		**B5/B14**
	25	323	0.9	57.00		**B5/B14**
	16	446	0.7	85.50		**B5/B14**
	33	255	1.6	42.75	**CMPU01/070**	**B5/B14**
	25	327	1.3	57.00		**B5/B14**
	16	452	1.0	85.50		**B5/B14**
	33	255	1.9	42.75	**CMPU01/075**	**B5/B14**
	25	327	1.5	57.00		**B5/B14**
	16	459	1.2	85.50		**B5/B14**
	12	578	0.8	114.00		**B5/B14**
	33	261	2.7	42.75	**CMPU01/090**	**B5/B14**
	25	335	2.2	57.00		**B5/B14**
	16	471	1.8	85.50		**B5/B14**
	12	603	1.3	114.00		**B5/B14**
	9.8	723	1.0	142.50		**B5/B14**
	8.2	792	1.2	171.00		**B5/B14**
	6.1	972	0.8	228.00		**B5/B14**

Dimensioni

Dimensions

	CMPU.. - CMPU..F - CMPU..FB - CMPU..FL													
	A	C	D H8	E	F	G1	H	HX	I	K	L	M	N h8	N1
01/050	80	120	25	144	49	92	60	36.5	50	70	85	85	70	43.5
01/063	100	144	25	174	67	112	72	36.5	63	85	104	95	80	53
01/070	110	160	28	195	64	120	80	36.5	70	90	104	115	95	57
01/075	120	172	28	205	72	120	86	36.5	75	90	112	115	95	57
01/090	140	208	35	238	74	140	103	36.5	90	100	130	130	110	67

	CMPU.. - CMPU..F - CMPU..FB - CMPU..FL												
	O	P	Q	R	S	T	V	Z	KE	a	b	t	Kg
01/050	8.5	98	64	84	7	30	40	210	M8x10(n.4)	45°	8	28.3 (27.3)	6.0
01/063	8.5	110	80	102	8	36	50	228	M8x14(n.8)	45°	8	28.3	8.7
01/070	9	130	91	115	9	40	55	238	M8x14(n.8)	45°	8	31.3	10.0
01/075	11	140	93	119	10	40	60	243	M8x14(n.8)	45°	8	31.3	11.5
01/090	13	160	102	135	11	45	70	260	M10x18(n.8)	45°	10	38.3	15.5

		CMPU..F								CMPU..FB							CMPU..FL							
	a1	KA	KB	KC	KM	KN H8	KO	KP	KQ	KA	KB	KC	KM	KN H8	KO	KP	KA	KB	KC	KM	KN H8	KO	KP	KQ
01/050	45°	90	9	5	90-110	70	11(n.4)	125	110	89	9	5	130-145	110	9.5(n.4)	160	120	9	5	90-110	70	11(n.4)	125	110
01/063	45°	82	10	6	150-160	115	11(n.4)	180	142	98	10	5	165-180	130	11(n.4)	200	112	10	6	150-160	115	11(n.4)	180	142
01/070	45°	111	13	6	165-180	130	14(n.4)	200	170	—	—	—	—	—	—	—	—	—	—	—	—	—	—	—
01/075	45°	111	13	6	165-180	130	14(n.4)	200	170	—	—	—	—	—	—	—	—	—	—	—	—	—	—	—
01/090	45°	111	13	6	175-190	152	14(n.4)	210	200	—	—	—	—	—	—	—	—	—	—	—	—	—	—	—

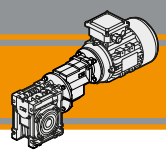

Dimensioni ***Dimensions***

CMPU..U

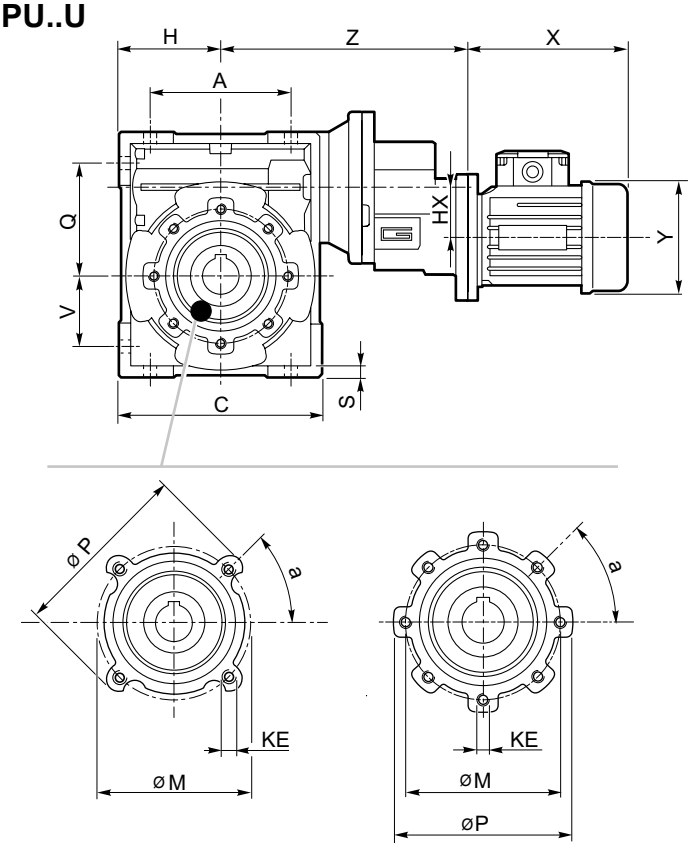

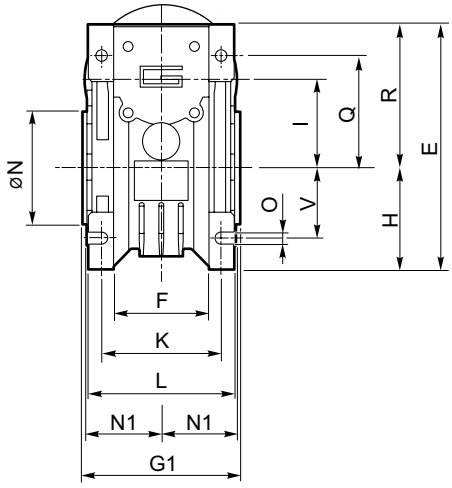

..01/050

..01/063
..01/070
..01/075
..01/090

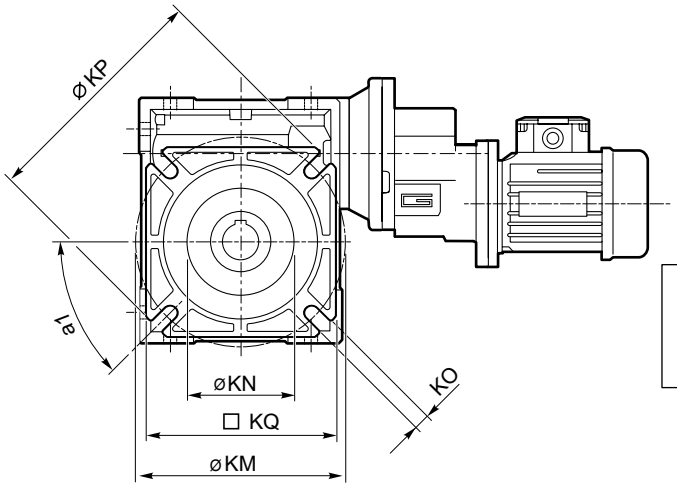

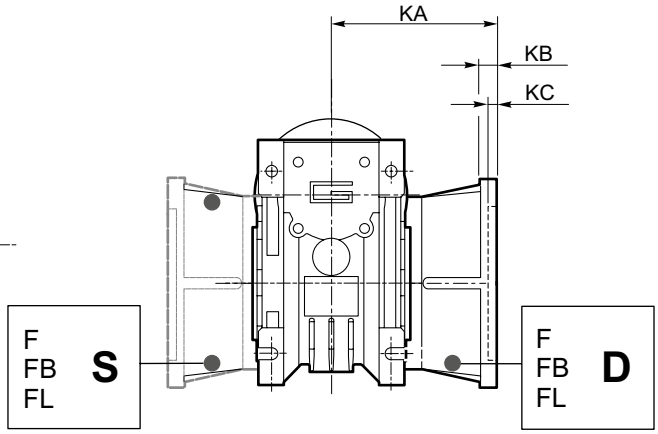

CMPU..F **(..01/050 - .. 01/090)**
CMPU..FB **(.. 01/050 - .. 01/063)**
CMPU..FL **(.. 01/050 - .. 01/063)**

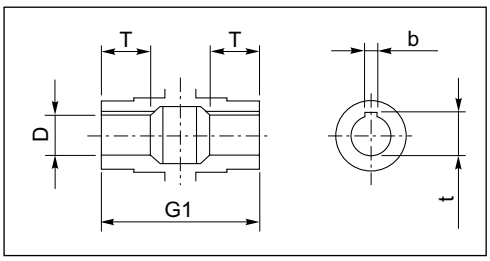

Albero lento cavo / *Hollow output shaft*

Accessori / *Accessories*

Albero lento semplice e doppio / *Single and double output shaft*

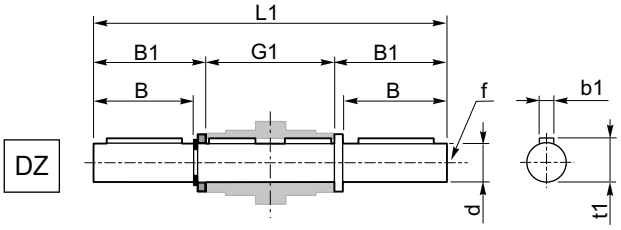

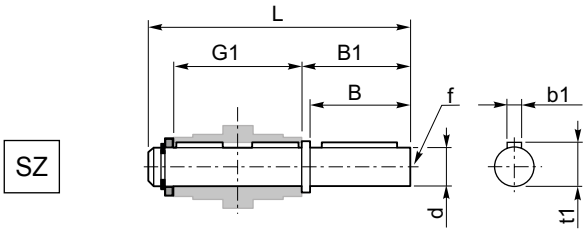

CMPU	d h7	B	B1	G1	L	L1	f	b1	t1
01/050	25	50	53.5	92	153	199	M10	8	28
01/063	25	50	53.5	112	173	219	M10	8	28
01/070	28	60	63.5	120	192	247	M10	8	31
01/075	28	60	63.5	120	192	247	M10	8	31
01/090	35	80	84.5	140	234	309	M12	10	38

Braccio di reazione / *Torque arm*

CMPU	K1	G	KG	KH	R
01/050	100	14	38	10	18
01/063	150	14	47.5	10	18
01/070	200	25	46.5	20	30
01/075	200	25	46.5	20	30
01/090	200	25	56.5	20	30

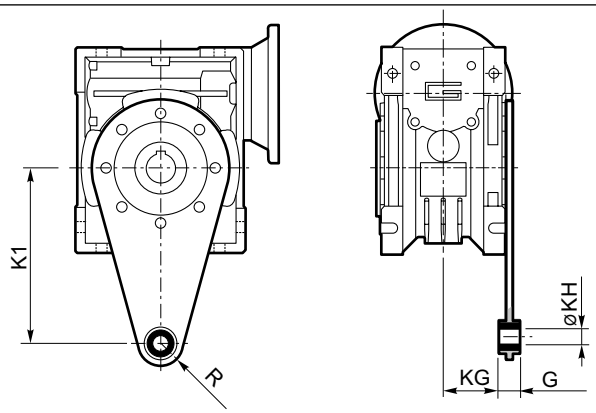

SC - *Safety Cover*

CMPU	M
01/050	62.5
01/063	73
01/070	75
01/075	79
01/090	94

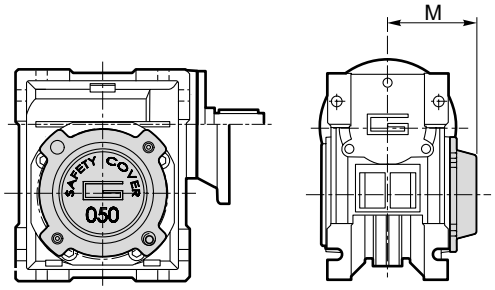

Opzioni / *Options*

VS - Vite sporgente / *Extended input shaft*

CMPU	A	B	D_1 j6	E	F	G
01/050	64	30	14	M6	5	16
01/063	75	40	19	M6	6	21.5
01/070	84	40	19	M6	6	21.5
01/075	90	50	24	M8	8	27
01/090	108	50	24	M8	8	27

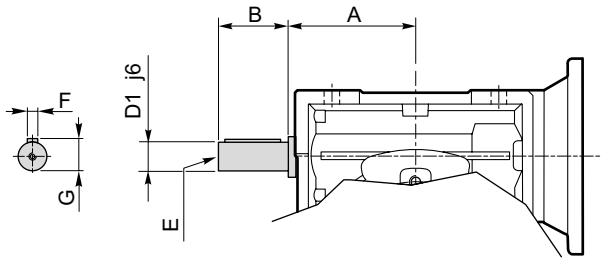

Costruito su richiesta
Built on request

MA TRANSTECNO S.A.P.I. DE C.V.
Av. Mundial # 176, Parque Industrial
JM Apodaca, Nuevo León,
C.P. 66600
MÉXICO
T +52 8113340920
info@transtecno.com.mx
www.transtecno.com.mx

TRANSTECNO SRL
Via Caduti di Sabbiuno, 11/D-E
40011 Anzola dell'Emilia (BO)
ITALY
T+39 051 64 25 811
F +39 051 73 39 04
sales@transtecno.com
www.transtecno.com

HANGZHOU TRANSTECNO POWER TRANSMISSIONS CO LTD
No.4 Xiuyan Road Fengdu Industry Zone
Pingyao Town Yuhang District
Hangzhou City, Zhejiang Province
311115 – CHINA
T +86 571 86 92 02 60
F +86 571 86 92 18 10
info-china@transtecno.com
www.transtecno.cn

CATACALU0118

TRANSTECNO U.S.A. LLC
5440 S.W. 156th Place Miami,
FL 33185 - USA
Tel: +1 (305) 220-4423
Fax: +1 (305) 220-5945
usaoffice@transtecno.com

TRANSTECNO B.V.
Ind. terrein Wieken/Vinkenhoef
De Stuwdam,43
3815 KM Amersfoort - NETHERLANDS
Tel: +31(0) 33 45 19 505
Fax: +31(0) 33 45 19 506
info@transtecno.nl
www.transtecno.nl

SALES OFFICE INDIA
A/10, Anagha, S.N. Road, Mulund (W) Mumbai
400080 - INDIA
Tel: +91 9820614698
Fax-Italy: +39 051 733 904
indiaoffice@transtecno.com

SALES OFFICE BRAZIL
Rua Dr. Freire Alemão 155 / 402 - CEP. 90450-060
Auxiliadora Porto Alegre RS - BRAZIL
Tel: +55 51 3251 5447
Fax: +55 51 3251 5447
Mobile: +55 51 811 45 962
braziloffice@transtecno.com
www.transtecno.com.br

TRANSTECNO IBÉRICA
THE MODULAR GEARMOTOR, S.A.
C/Enginy, 2 Nave 6 - 08850 Gavà (Barcelona) - SPAIN
Tel: +34 931 598 950
info@transtecno.es
www.transtecno.es

SALES OFFICE SOUTH KOREA
D-304 Songdo BRC Smart Valley 30, Songdomirae-ro,
Yeonsu-gu, Incheon, 406-840 - KOREA
Tel: +82 70 8288 2107
Fax: +82 32 815 2107
Mobile: +82 10 5094 2107
koreaoffice@transtecno.com

SALES OFFICE FRANCE
12 Impasse des Mûriers
38300 Ruy - FRANCE
Tel: +33 (0) 6 85 12 09 87
Fax-Italy: +39 051 733 904
franceoffice@transtecno.com
www.transtecno.fr

SALES OFFICE OCEANIA
44 Northview drive, Sunshine west 3020
Victoria - AUSTRALIA
Ph +61 03 9312 4722
Fax +61 03 9312 4714
Mobile: +61 0438060997
oceaniaoffice@transtecno.com
www.transtecno.com.au

TRANSTECNO®
the modular gearmotor

www.transtecno.com

designed by Procedi srl