TRANSTECNO®
the modular gearmotor

CM-CMP

CM-CMP

CM-CMP Alu

Motoriduttori a vite senza fine
Wormgearmotors

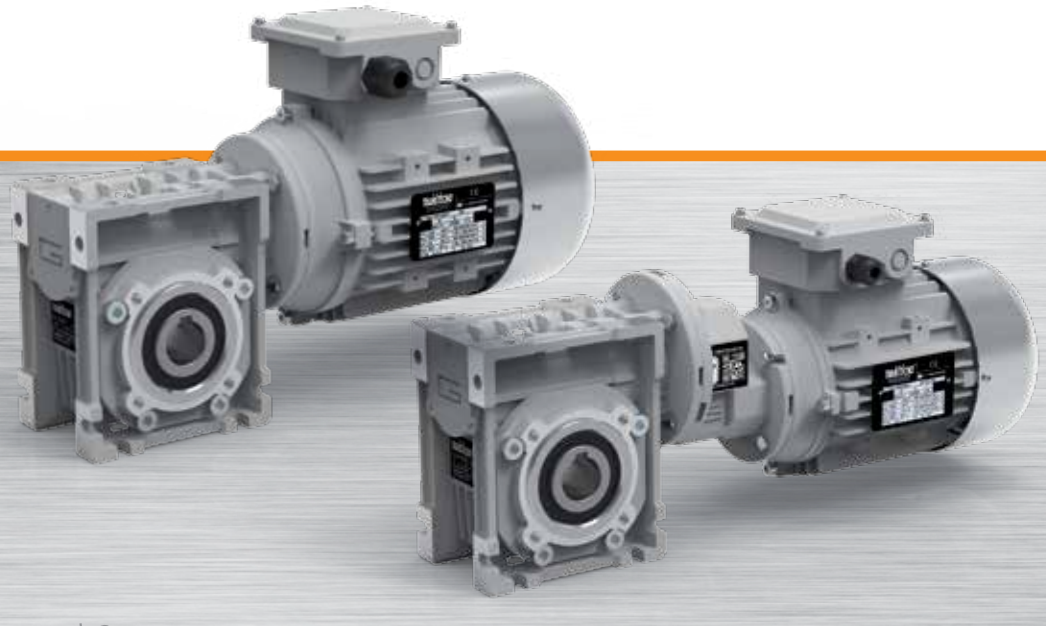

TRANSTECNO · GENUINE · PRODUCTS

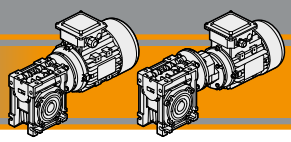

Indice	*Index*	Pag. *Page*
Caratteristiche tecniche	*Technical features*	**G2**
Designazione	*Classification*	**G2**
Sensi di rotazione	*Direction of rotation*	**G3**
Simbologia	*Symbols*	**G3**
Lubrificazione	*Lubrication*	**G4**
Carichi radiali	*Radial loads*	**G5**
Dati di dentatura	*Toothing data*	**G6**
Rendimento	*Efficiency*	**G6**
Dati tecnici	*Technical data*	**G7**
Motori applicabili	*IEC Motor adapters*	**G24**
Dimensioni	*Dimensions*	**G26**
Accessori	*Accessories*	**G39**
Opzioni	*Options*	**G40**

Questa sezione annulla e sostituisce ogni precedente edizione o revisione. Qualora questa sezione non Vi sia giunta in distribuzione controllata, l'aggiornamento dei dati ivi contenuto non è assicurato. **In tal caso la versione più aggiornata è disponibile sul nostro sito internet www.transtecno.com**

This section replaces any previous edition and revision. If you obtained this catalogue other than through controlled distribution channels, the most up to date content is not guaranteed. ***In this case the latest version is available on our web site www.transtecno.com***

Caratteristiche tecniche

L'elevata modularità contraddistingue i motoriduttori a vite senza fine della serie CM e CMP: i diversi kit entrata ed uscita li rendono estremamente versatili.
Le caratteristiche principali della serie CM e CMP sono:

- Carcassa in alluminio nelle grandezze 026, 030, 040, 050, 063, 070, 075, 090 e 110. La grandezza 130 è costruita con carcassa in ghisa;
- Le grandezze 090, 110 e 130 sono fornite con cuscinetti a rulli conici sulla vite;
- Le precoppie sono costruite con carcassa in allumino;

Technical features

The high degree of modularity is a design feature of CM and CMP wormgearmotors range thanks to a wide selection of input and output kits.
Main features of CM and CMP range are:

- *Die-cast aluminium housing on sizes 026, 030, 040, 050, 063, 070, 075, 090 and 110. Cast iron housing on size 130;*
- *Double taper roller bearing on sizes 090, 110 and 130;*
- *Die-cast aluminium housing on pre-stage units;*

Designazione

Classification

RIDUTTORI A VITE SENZA FINE / WORMGEARBOXES

RIDUTTORE / *GEARBOX*

CM	050	U	10	71	B5	SZDX	BRSX	90	M1	VS
Tipo *Type*	Grandezza *Size*	Versione riduttore *Gearbox Version*	Rapporto *Ratio*	IEC	Forma costruttiva *Version*	Albero di uscita *Output shaft*	Braccio di reazione *Torque arm*	Angolo *Angle*	Pos. di montaggio *Mounting position*	Opzioni *Options*
CM **CMIS** 	**026** **030** **040** **050** **063** **070** **075** **090** **110** **130**	**U** **FD** **FS** **FLD** **FLS** **FBD** **FBS**	Vedere tabella *See tables*	**56..** **—** **132..**	**B5** **B14**	**SZDX** **SZSX** **DZ**	**BRDX** **BRSX**	**0°** **90°** **180°** **270°**	**M1** (B3) **M2** (V6) **M3** (B8) **M4** (V5) **M6** (B6) **M5** (B7)	**VS**

RIDUTTORI A VITE SENZA FINE CON PRECOPPIA / PRE-STAGE WORMGEARBOXES

RIDUTTORE / *GEARBOX*

CMP	063/050	U	90	63	B14	SZDX	BRSX	90	P4	M1	VS
Tipo *Type*	Grandezza *Size*	Versione Riduttore *Gearbox Version*	Rapporto *Ratio*	IEC	Forma costruttiva Version	Albero di uscita *Output shaft*	Braccio di reazione *Torque arm*	Angolo *Angle*	Pos. di montaggio precoppia *Pre stage mounting position*	Pos. di montaggio *Mounting position*	Opzioni *Options*
CMP 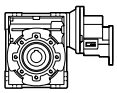	**056/030** **056/040** **063/040** **063/050** **063/063** **071/050** **071/063** **071/070** **071/075** **071/090** **080/063** **080/070** **080/075** **080/090** **080/110** **080/130** **090/070** **090/075** **090/090** **090/110** **090/130**	**U** **FD** **FS** **FLD** **FLS** **FBD** **FBS**	Vedere tabella *See tables*	**56..** **—** **80..**	**B5** **B14**	**SZDX** **SZSX** **DZ**	**BRDX** **BRSX**	**0°** **90°** **180°** **270°**	**P1** **P2** **P3** (standard) **P4**	**M1** (B3) **M2** (V6) **M3** (B8) **M4** (V5) **M6** (B6) **M5** (B7)	**VS**

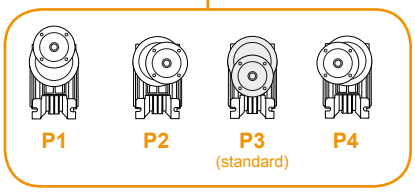

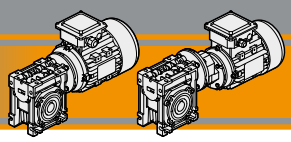

Designazione / *Classification*

Versione Riduttore
Gearbox Version

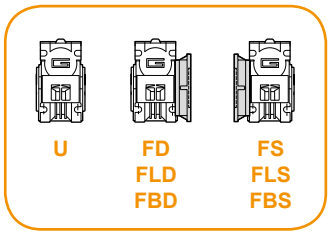

Albero di uscita
Output shaft

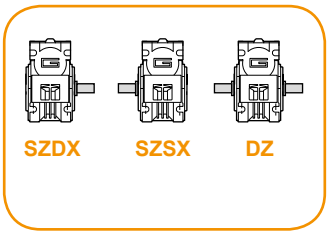

Braccio di reazione
Torque arm

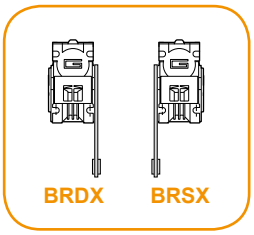

Angolo
Angle

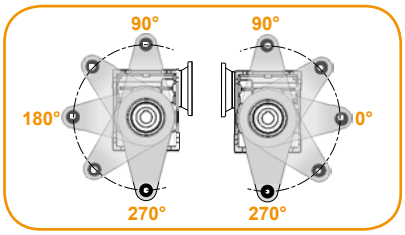

MOTORE CM / *CM MOTOR*					
0.75kW	**4p**	**3ph**	**230/400V**	**50Hz**	**T1**
Potenza *Power* Vedi tabelle *See tables*	Poli *Poles* **2p** **4p** **6p** **8p**	Fasi *Phases* **1ph** **3ph**	Tensione *Voltage* **230/400V** **220/380V** **...** **230V** **...**	Frequenza *Frequency* **50Hz** **60Hz**	Pos. morsettiera *Terminal box pos.* **T1** (Std) **T4** **T2** **T3**

Sensi di rotazione / *Direction of rotation*

CM

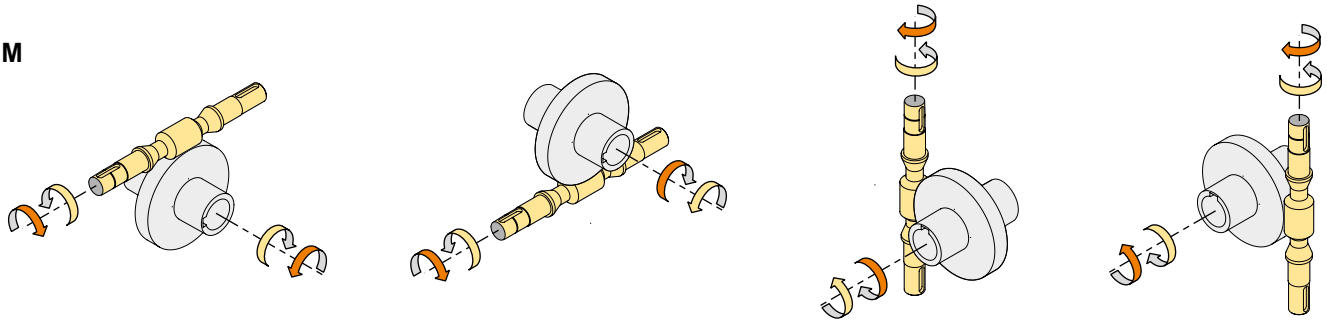

CMP

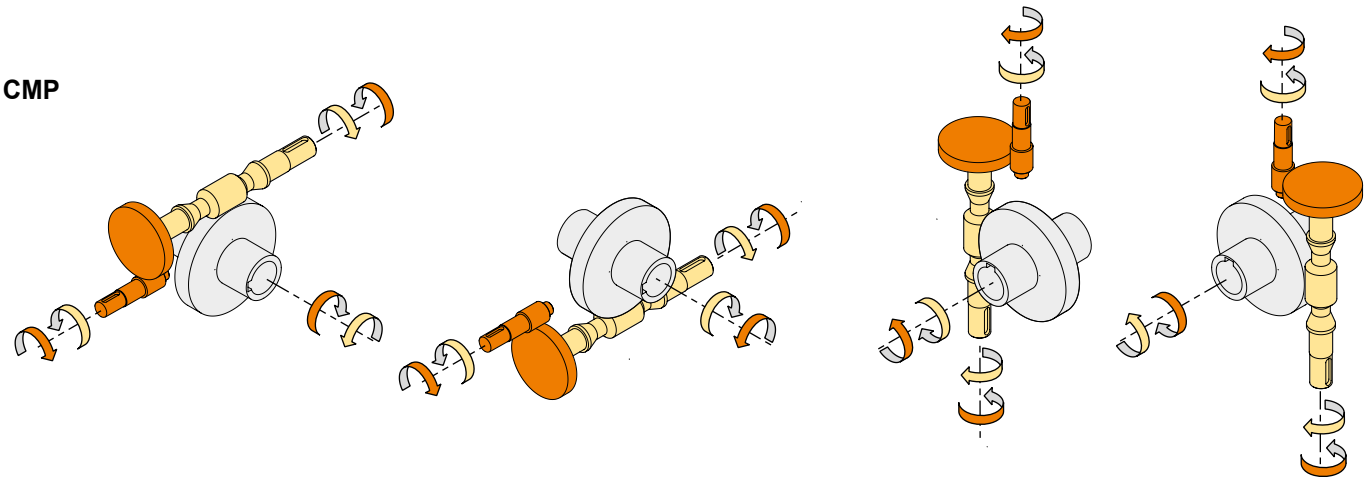

Simbologia / *Symbols*

n_1	[min^{-1}]	Velocità in ingresso / *Input speed*	sf		Fattore di servizio / *Service factor*
n_2	[min^{-1}]	Velocità in uscita / *Output speed*	Rd	%	Rendimento dinamico / *Dynamic efficiency*
i		Rapporto di riduzione / *Ratio*	Rs	%	Rendimento statico / *Static efficiency*
P_1	[kW]	Potenza in entrata / *Nominal input power*	R_2	[N]	Carico radiale ammissibile in uscita / *Permitted output radial load*
M_2	[Nm]	Coppia in uscita in funzione di P_1 / *Output torque referred to P_1*	A_2	[N]	Carico assiale ammissibile in uscita / *Permitted output axial load*
Pn_1	[kW]	Potenza nominale in entrata / *Nominal input power*	Z		Numero di principi della vite / *Worm starts*
Mn_2	[Nm]	Coppia nominale in uscita in funzione di Pn_1 / *Nominal output torque referred to Pn_1*	β		Angolo d'elica / *Helix angle*

Lubrificazione

Lubrication

Tutti i motoriduttori sono forniti completi di lubrificante sintetico viscosità 320, pertanto possono essere installati in qualunque posizione di monatggio e non necessitano di manutenzione.

Permanent synthetic oil long-life lubrication (viscosity grade 320) makes it possible to use the gearmotors in all mounting positions; for this reason they can be installed in any assembly position and do not require maintenance.

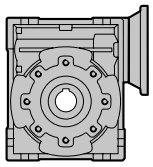

CM	**Quantità di olio** (litri) / ***Oil quantity*** *(litres)*					
	M1 (B3)	**M3** (B8)	**M6** (B6)	**M5** (B7)	**M4** (V5)	**M2** (V6)
130	4.5	3.3	3.5	3.5	4.5	3.3

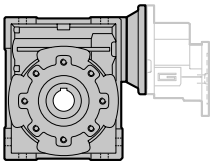

CMP	**Quantità di olio** (litri) / ***Oil quantity*** *(litres)*					
	M1 (B3)	**M3** (B8)	**M6** (B6)	**M5** (B7)	**M4** (V5)	**M2** (V6)
080/130 - 090/130	4.5	3.3	3.5	3.5	4.5	3.3

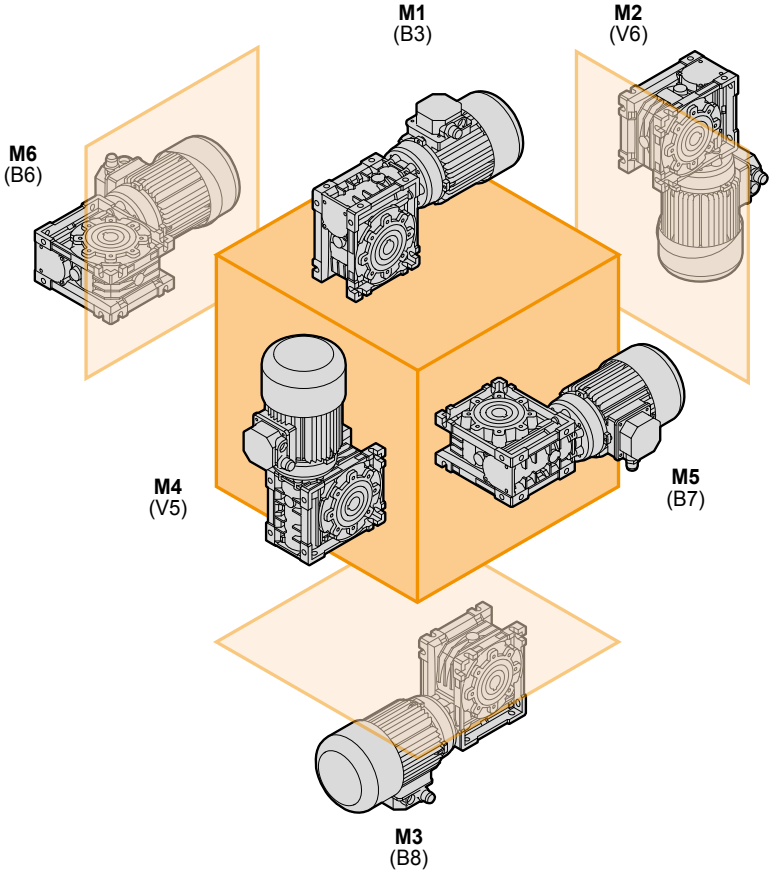

CM_CMP 130

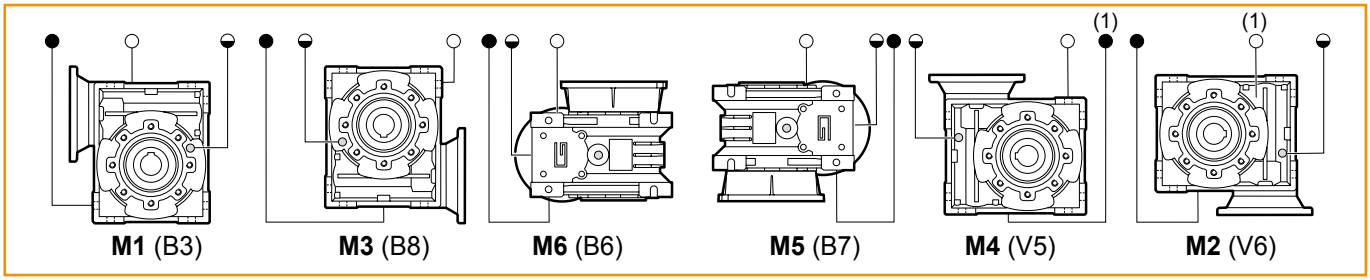

(standard)

(1): Tappo in posizione posteriore / *Plug in backside position*

◯ Sfiato e tappo di riempimento / *Breather and filling plug*
◒ Livello olio / *Oil level plug*
● Tappo di scarico / *Oil drain plug*

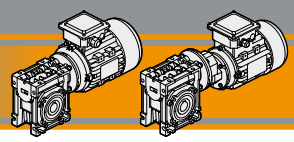

Carichi radiali

Radial loads

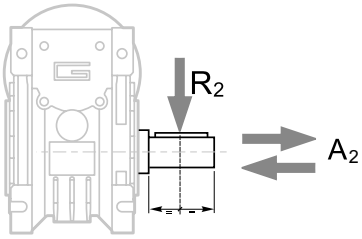

$A_2 = R_2 \times 0.2$

n_2 [min^{-1}]	R_2 [N]									
	CM026	CM030	CM040	CM050	CM063	CM070	CM075	CM090	CM110	CM130
187	400	674	1264	1770	2445	2613	2824	3161	5058	5732
140	490	743	1392	1949	2692	2878	3110	3481	5570	6313
93	580	851	1596	2234	3085	3298	3564	3990	6384	7235
70	610	936	1754	2456	3392	3626	3918	4386	7018	7953
56	610	1008	1890	2646	3654	3906	4221	4725	7560	8567
47	610	1069	2004	2805	3874	4141	4475	5009	8014	9083
35	610	1179	2210	3095	4273	4568	4937	5526	8842	10021
28	610	1270	2381	3334	4603	4921	5318	5953	9524	10794
23	610	1356	2542	3559	4915	5254	5678	6356	10170	11526
18	610	1471	2759	3862	5334	5702	6162	6897	11036	12507
14	610	1600	3000	4200	5800	6200	6700	7500	12000	13600
		CMP... /030	CMP... /040	CMP... /050	CMP... /063	CMP... /070	CMP... /075	CMP... /090	CMP... /110	CMP... /130

Quando il carico radiale risultante non è applicato sulla mezzeria dell'albero occorre calcolare quello effettivo con la seguente formula:

When the resulting radial load is not applied on the centre line of the shaft it is necessary to calculate the effective load with the following formula:

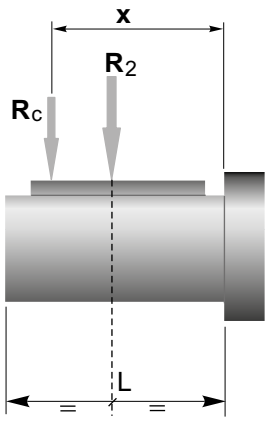

	CM	CM / CMP								
	026	030	040	050	063	070	075	090	110	130
a	56	65	84	101	120	122	131	182	176	188
b	43	50	64	76	95	92	101	122	136	148
R_{2MAX}	610	1600	3000	4200	5800	6200	6700	7500	12000	13600

$$R_c = \frac{R_2 \cdot a}{(b + x)} \leq R_{2MAX}$$

$$R \leq R_c$$

a, b = valori riportati nella tabella
a, b = values given in the table

Dati di dentatura — *Toothing data*

	Dati della coppia vite-corona *Worm wheel data*	Rapporto / *Ratio*											
		5	**7.5**	**10**	**15**	**20**	**25**	**30**	**40**	**50**	**60**	**80**	**100**
CM026	Z	6	4	3	2	2		1	1	1	1		
	β	34° 35'	24° 41'	19° 1'	12° 57 '	10° 30'		6° 33'	5° 17'	4° 26'	3°49'		
CM030	Z	6	4	3	2	2	2	1	1	1	1	1	1
	β	27° 4'	24° 28'	18° 50'	12° 49'	10° 23'	8° 43'	6° 29'	5° 14'	4° 23'	3° 46'	2° 57'	2° 25'
CM040	Z	6	4	3	2	2	2	1	1	1	1	1	1
	β	34° 19'	24° 28'	18° 50'	12° 49'	10° 23'	8° 43'	6° 29'	5° 14'	4° 23'	3°46'	2° 57'	2° 25'
CM050	Z	6	4	3	2	2	2	1	1	1	1	1	1
	β	33° 37'	23° 54'	18° 23'	12° 29'	10° 6'	8° 28'	6° 19'	5° 5'	4° 15'	3° 39'	2°51'	2° 20'
CM063	Z	6	4	3	2	2	2	1	1	1	1	1	1
	β	34° 23'	24° 31'	18° 53'	12° 50'	10° 24'	8° 44'	6° 30'	5° 14'	4° 23'	3° 47'	2° 57'	2° 25'
CM070	Z		4	3	2	2	2	1	1	1	1	1	1
	β		26°12'	20°15'	13°49'	11°15'	9°29'	7°0'	5°41'	4°46'	4°7'	3°13'	2°39'
CM075	Z		4	3	2	2	2	1	1	1	1	1	1
	β		26° 17'	20° 20'	13° 52'	11° 18'	9° 32'	7° 2'	5° 42'	4° 48'	4° 8'	3° 14'	2° 40'
CM090	Z		4	3	2	2	2	1	1	1	1	1	1
	β		29° 11'	22° 43'	15° 36'	12° 50'	10° 53'	7° 56'	6° 30'	5° 29'	4° 45'	3° 45'	3° 6'
CM110	Z		4	3	2	2	2	1	1	1	1	1	1
	β		28° 14'	21° 56'	15° 1'	14° 41'	12° 34'	7° 38'	7° 28'	6° 21'	5° 32'	4° 24'	3° 39'
CM130	Z		4	3	2	2	2	1	1	1	1	1	1
	β		28°43'	22°20'	15°19'	13°47'	11°54'	7°48'	7°00'	6°01'	5°16'	4°08'	3°27'

Rendimento — *Efficiency*

	n_1 [min^{-1}]	Rendimento *Efficiency*	Rapporto / *Ratio*											
			5	**7.5**	**10**	**15**	**20**	**25**	**30**	**40**	**50**	**60**	**80**	**100**
CM026	2800	Rd	89	87	85	83	80		73	68	64	60		
	1400		87	84	83	78	74		66	61	57	53		
	900		84	83	80	75	71		61	57	52	48		
		Rs	72	71	68	61	56	46	41	36	34			
CM030	2800	Rd	89	88	86	84	81	78	74	70	65	62	57	52
	1400		86	85	84	79	75	72	67	62	58	55	48	43
	900		84	83	81	75	71	68	62	58	53	49	43	39
		Rs	72	67	63	55	50	43	39	35	31	27	23	21
CM040	2800	Rd	90	89	87	84	83	80	77	73	69	66	60	56
	1400		88	86	84	81	78	74	70	65	60	58	52	46
	900		86	84	82	77	74	70	66	60	57	53	46	41
		Rs	74	71	67	60	55	51	45	40	36	32	28	24
CM050	2800	Rd	91	90	88	86	84	82	78	74	71	68	62	58
	1400		89	87	85	82	79	76	72	67	63	60	54	49
	900		87	85	84	79	75	72	68	62	59	55	48	43
		Rs	73	70	66	59	55	51	44	39	35	32	27	23
CM063	2800	Rd	91	90	88	86	84	83	79	76	73	70	65	60
	1400		90	88	86	84	81	78	75	70	66	63	57	52
	900		89	86	84	81	78	75	70	65	61	58	52	47
		Rs	73	71	67	60	55	51	45	40	36	33	28	24
CM070	2800	Rd		90	89	87	85	84	80	77	74	72	67	62
	1400			89	87	84	82	80	76	72	68	65	60	53
	900			87	85	82	79	77	72	67	63	60	54	49
		Rs		72	69	62	60	55	48	43	38	36	31	26
CM075	2800	Rd		90	89	87	85	84	81	78	75	72	68	63
	1400			89	87	84	83	80	77	73	69	66	60	56
	900			87	85	83	80	77	73	68	64	61	55	50
		Rs		73	69	62	59	55	48	43	39	36	31	27
CM090	2800	Rd		91	90	88	86	85	83	80	78	75	71	67
	1400			90	88	86	84	83	79	76	72	69	64	60
	900			88	87	84	82	80	76	72	68	65	60	55
		Rs		74	71	65	61	59	51	46	42	39	34	30
CM110	2800	Rd		90	89	88	87	86	82	81	79	77	73	70
	1400			89	88	86	85	84	80	79	76	73	68	64
	900			88	87	84	83	82	78	75	71	68	63	59
		Rs		74	71	64	64	60	50	49	46	42	37	33
CM130	2800	Rd		90	89	88	87	86	82	80	79	77	72	70
	1400			89	88	86	84	83	79	76	75	73	69	64
	900			88	87	84	82	81	77	74	73	70	64	59
		Rs		74	71	64	64	60	50	49	46	42	37	33

Rendimento teorico del riduttore dopo il rodaggio
Theoretical efficiency of the gearbox after the first running period

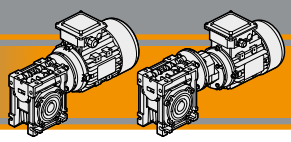

Dati tecnici — n_1 1400 min^{-1} — ***Technical data***

CMIS026

n_2 [min^{-1}]	Mn_2 [Nm]	Pn_1 [kW]	i
280	13	0.44	5
187	14	0.33	7,5
140	14	0.25	10
93	14	0.18	15
70	14	0.14	20
47	15	0.11	30
35	14	0.08	40
28	13	0.07	50
23	12	0.06	60

CMIS030

n_2 [min^{-1}]	Mn_2 [Nm]	Pn_1 [kW]	i
280	18	0.61	5
187	20	0.46	7.5
140	21	0.37	10
93	21	0.26	15
70	19	0.19	20
56	20	0.16	25
47	22	0.16	30
35	20	0.12	40
28	19	0.10	50
23	17	0.08	60
18	15	0.06	80
14	14	0.05	100

CMIS040

n_2 [min^{-1}]	Mn_2 [Nm]	Pn_1 [kW]	i
280	41	1.37	5
187	44	1.00	7.5
140	45	0.79	10
93	45	0.54	15
70	40	0.38	20
56	38	0.30	25
47	48	0.34	30
35	42	0.24	40
28	39	0.19	50
23	36	0.15	60
18	33	0.12	80
14	31	0.10	100

CMIS050

n_2 [min^{-1}]	Mn_2 [Nm]	Pn_1 [kW]	i
280	75	2.5	5
187	79	1.8	7.5
140	82	1.4	10
93	82	0.98	15
70	72	0.67	20
56	70	0.54	25
47	88	0.60	30
35	76	0.42	40
28	72	0.34	50
23	69	0.28	60
18	60	0.20	80
14	56	0.17	100

CMIS063

n_2 [min^{-1}]	Mn_2 [Nm]	Pn_1 [kW]	i
280	134	4.4	5
187	144	3.2	7.5
140	148	2.5	10
93	154	1.8	15
70	136	1.23	20
56	135	1.0	25
47	166	1.1	30
35	142	0.74	40
28	136	0.60	50
23	126	0.49	60
18	118	0.38	80
14	116	0.33	100

Nota:
Pn_1 è la potenza meccanica.
La potenza applicabile è ridotta del fattore termico.
Per maggiori dettagli consultare il nostro Servizio Tecnico.

CMIS070

n_2 [min^{-1}]	Mn_2 [Nm]	Pn_1 [kW]	i
187	200	4.4	7.5
140	218	3.7	10
93	221	2.6	15
70	202	1.8	20
56	180	1.3	25
47	241	1.6	30
35	210	1.1	40
28	190	0.82	50
23	181	0.68	60
18	159	0.49	80
14	154	0.43	100

CMIS075

n_2 [min^{-1}]	Mn_2 [Nm]	Pn_1 [kW]	i
187	238	5.2	7.5
140	257	4.3	10
93	266	3.1	15
70	242	2.1	20
56	225	1.7	25
47	289	1.8	30
35	251	1.3	40
28	227	0.96	50
23	218	0.82	60
18	193	0.59	80
14	183	0.49	100

CMIS090

n_2 [min^{-1}]	Mn_2 [Nm]	Pn_1 [kW]	i
187	342	7.4	7.5
140	380	6.2	10
93	433	4.9	15
70	414	3.6	20
56	369	2.6	25
47	493	3.0	30
35	434	2.1	40
28	385	1.55	50
23	352	1.23	60
18	324	0.92	80
14	299	0.72	100

CMIS110

n_2 [min^{-1}]	Mn_2 [Nm]	Pn_1 [kW]	i
187	605	13	7.5
140	669	11.0	10
93	730	8.2	15
70	740	6.0	20
56	670	4.7	25
47	815	4.9	30
35	768	3.6	40
28	699	1.7	50
23	626	1.1	60
18	562	1.51	80
14	523	1.19	100

CMIS130

n_2 [min^{-1}]	Mn_2 [Nm]	Pn_1 [kW]	i
187	750	16.5	7.5
140	820	13.7	10
93	910	10.3	15
70	910	7.9	20
56	920	6.5	25
47	1050	6.5	30
35	1050	5.1	40
28	970	3.8	50
23	890	3.0	60
18	830	2.2	80
14	735	1.7	100

Note:
Pn_1 is an input mechanical power which must be reduced by the heating factor in order to get the relevant one. For more details please contact our Technical Service.

Dati tecnici

Technical data

0.06

P_1 [kW]	n_2 [min^{-1}]	M_2 [Nm]	sf	i			IEC
56A4 (1400 min^{-1})	280	2	7.3	5	CM026		B14
	187	3	5.4	7.5	CM026		B14
	140	3	4.1	10	CM026		B14
	93	5	2.9	15	CM026		B14
	70	6	2.3	20	CM026		B14
	47	8	1.9	30	CM026		B14
	35	10	1.4	40	CM026		B14
	28	12	1.1	50	CM026		B14
	23	13	0.9	60	CM026		B14
	280	2	10.2	5	CM030		B5/B14
	187	3	7.7	7.5	CM030		B5/B14
	140	3	6.1	10	CM030		B5/B14
	93	5	4.3	15	CM030		B5/B14
	70	6	3.1	20	CM030		B5/B14
	56	7	2.7	25	CM030		B5/B14
	47	8	2.7	30	CM030		B5/B14
	35	10	2.0	40	CM030		B5/B14
	28	12	1.6	50	CM030		B5/B14
	23	14	1.3	60	CM030		B5/B14
	23	16	1.6	60		CMP056/030	B14
	19	19	1.4	75		CMP056/030	B14
	18	16	1.0	80	CM030		B5/B14
	16	21	1.5	90		CMP056/030	B14
	14	18	0.8	100	CM030		B5/B14
	12	26	1.1	120		CMP056/030	B14
	9.3	29	0.9	150		CMP056/030	B14
	28	12	3.2	50	CM040		B5/B14
	23	14	2.5	60	CM040		B5/B14
	23	17	3.4	60		CMP056/040	B14
	19	20	2.6	75		CMP056/040	B14
	18	17	1.9	80	CM040		B5/B14
	16	23	3.1	90		CMP056/040	B14
	14	19	1.6	100	CM040		B5/B14
	12	28	2.2	120		CMP056/040	B14
	9.3	32	1.8	150		CMP056/040	B14
	7.8	35	1.5	180		CMP056/040	B14
	5.8	41	1.1	240		CMP056/040	B14
	4.7	46	0.9	300		CMP056/040	B14

0.09

P_1 [kW]	n_2 [min^{-1}]	M_2 [Nm]	sf	i			IEC
56A2 (2800 min^{-1})	560	1	7.3	5	CM026		B14
	373	2	5.5	7.5	CM026		B14
	280	3	4.2	10	CM026		B14
	187	4	2.9	15	CM026		B14
	140	5	2.2	20	CM026		B14
	93	7	1.8	30	CM026		B14
	70	8	1.3	40	CM026		B14
	56	10	1.0	50	CM026		B14
	47	11	0.8	60	CM026		B14
	140	5	2.8	20	CM030		B5/B14
	112	6	2.5	25	CM030		B5/B14
	93	7	2.6	30	CM030		B5/B14
	70	9	1.9	40	CM030		B5/B14
	56	10	1.5	50	CM030		B5/B14
	47	11	1.2	60	CM030		B5/B14
	47	13	1.7	60		CMP056/030	B14
	37	15	1.4	75		CMP056/030	B14
	35	14	0.9	80	CM030		B5/B14

0.09

P_1 [kW]	n_2 [min^{-1}]	M_2 [Nm]	sf	i			IEC
56A2 (2800 min^{-1})	31	17	1.6	90		CMP056/030	B14
	28	16	0.7	100	CM030		B5/B14
	23	21	1.1	120		CMP056/030	B14
	19	24	0.9	150		CMP056/030	B14
	47	12	2.4	60	CM040		B5/B14
	47	13	3.4	60		CMP056/040	B14
	37	16	2.8	75		CMP056/040	B14
	31	18	3.1	90		CMP056/040	B14
	23	22	2.2	120		CMP056/040	B14
	19	26	1.8	150		CMP056/040	B14
	16	29	1.5	180		CMP056/040	B14
	12	33	1.2	240		CMP056/040	B14
	9.3	37	1.0	300		CMP056/040	B14
56B4 (1400 min^{-1})	280	3	4.9	5	CM026		B14
	187	4	3.6	7.5	CM026		B14
	140	5	2.7	10	CM026		B14
	93	7	1.9	15	CM026		B14
	70	9	1.5	20	CM026		B14
	47	12	1.2	30	CM026		B14
	35	15	0.9	40	CM026		B14
	28	17	0.7	50	CM026		B14
	280	3	6.8	5	CM030		B5/B14
	187	4	5.1	7.5	CM030		B5/B14
	140	5	4.1	10	CM030		B5/B14
	93	7	2.9	15	CM030		B5/B14
	70	9	2.1	20	CM030		B5/B14
	56	11	1.8	25	CM030		B5/B14
	47	12	1.8	30	CM030		B5/B14
	35	15	1.3	40	CM030		B5/B14
	28	18	1.1	50	CM030		B5/B14
	23	20	0.8	60	CM030		B5/B14
	23	24	1.1	60		CMP056/030	B14
	19	29	0.9	75		CMP056/030	B14
	18	24	0.6	80	CM030		B5/B14
	16	32	1.0	90		CMP056/030	B14
	12	38	0.8	120		CMP056/030	B14
	35	16	2.6	40	CM040		B5/B14
	28	18	2.1	50	CM040		B5/B14
	23	21	1.7	60	CM040		B5/B14
	23	25	2.3	60		CMP056/040	B14
	19	30	1.7	75		CMP056/040	B14
	18	26	1.3	80	CM040		B5/B14
	16	34	2.1	90		CMP056/040	B14
	14	28	1.1	100	CM040		B5/B14
	12	42	1.5	120		CMP056/040	B14
	9.3	48	1.2	150		CMP056/040	B14
	7.8	53	1.0	180		CMP056/040	B14
	5.8	62	0.8	240		CMP056/040	B14
63A6 (900 min^{-1})	180	4	5.2	5	CM030		B5/B14
	120	6	4.0	7.5	CM030		B5/B14
	90	8	3.1	10	CM030		B5/B14
	60	11	2.3	15	CM030		B5/B14
	45	14	1.6	20	CM030		B5/B14
	36	16	1.4	25	CM030		B5/B14
	30	18	1.5	30	CM030		B5/B14
	23	22	1.0	40	CM030		B5/B14
	18	25	0.9	50	CM030		B5/B14

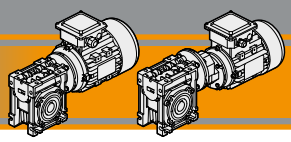

Dati tecnici

Technical data

0.09

P_1 [kW]	n_2 [min^{-1}]	M_2 [Nm]	sf	i			IEC
63A6 (900 min^{-1})	**45**	14	3.2	20	**CM040**		**B5/B14**
	36	17	2.6	25	**CM040**		**B5/B14**
	30	19	3.0	30	**CM040**		**B5/B14**
	23	23	2.1	40	**CM040**		**B5/B14**
	18	27	1.7	50	**CM040**		**B5/B14**
	15	30	1.4	60	**CM040**		**B5/B14**
	15	38	1.8	60		**CMP063/040**	**B14**
	12	45	1.4	75		**CMP063/040**	**B14**
	11	35	1.1	80	**CM040**		**B5/B14**
	10	48	1.7	90		**CMP063/040**	**B14**
	9	39	0.9	100	**CM040**		**B5/B14**
	7.5	58	1.2	120		**CMP063/040**	**B14**
	15	32	2.4	60	**CM050**		**B5/B14**
	15	38	3.3	60		**CMP063/050**	**B14**
	12	45	2.6	75		**CMP063/050**	**B14**
	11	37	1.9	80	**CM050**		**B5/B14**
	10	49	3.1	90		**CMP063/050**	**B14**
	9	41	1.6	100	**CM050**		**B5/B14**
	7.5	60	2.1	120		**CMP063/050**	**B14**
	6.0	67	1.8	150		**CMP063/050**	**B14**
	5.0	74	1.4	180		**CMP063/050**	**B14**
	3.8	85	1.1	240		**CMP063/050**	**B14**
	6.0	72	3.0	150		**CMP063/063**	**B14**
	5.0	79	2.5	180		**CMP063/063**	**B14**
	3.8	90	1.9	240		**CMP063/063**	**B14**
	3.0	101	1.5	300		**CMP063/063**	**B14**

0.12

P_1 [kW]	n_2 [min^{-1}]	M_2 [Nm]	sf	i			IEC
56B2 (2800 min^{-1})	**560**	2	5.5	5	**CM026**		**B14**
	373	3	4.1	7.5	**CM026**		**B14**
	280	3	3.2	10	**CM026**		**B14**
	187	5	2.2	15	**CM026**		**B14**
	140	7	1.7	20	**CM026**		**B14**
	93	9	1.3	30	**CM026**		**B14**
	70	11	1.0	40	**CM026**		**B14**
	56	13	0.8	50	**CM026**		**B14**
	560	2	7.1	5	**CM030**		**B5/B14**
	373	3	5.6	7.5	**CM030**		**B5/B14**
	280	4	4.5	10	**CM030**		**B5/B14**
	187	5	3.1	15	**CM030**		**B5/B14**
	140	7	2.1	20	**CM030**		**B5/B14**
	112	8	1.9	25	**CM030**		**B5/B14**
	93	9	2.0	30	**CM030**		**B5/B14**
	70	11	1.4	40	**CM030**		**B5/B14**
	56	13	1.1	50	**CM030**		**B5/B14**
	47	15	0.9	60	**CM030**		**B5/B14**
	47	17	1.3	60		**CMP056/030**	**B14**
	37	20	1.1	75		**CMP056/030**	**B14**
	31	22	1.2	90		**CMP056/030**	**B14**
	23	28	0.8	120		**CMP056/030**	**B14**
	93	9	4.0	30	**CM040**		**B5/B14**
	70	12	2.8	40	**CM040**		**B5/B14**
	56	14	2.3	50	**CM040**		**B5/B14**
	47	16	1.8	60	**CM040**		**B5/B14**
	47	18	2.5	60		**CMP056/040**	**B5/B14**
	37	21	2.1	75		**CMP056/040**	**B14**

0.12

P_1 [kW]	n_2 [min^{-1}]	M_2 [Nm]	sf	i			IEC
56B2 (2800 min^{-1})	**35**	20	1.4	80	**CM040**		**B5/B14**
	31	24	2.4	90		**CMP056/040**	**B14**
	28	23	1.0	100	**CM040**		**B5/B14**
	23	29	1.7	120		**CMP056/040**	**B14**
	19	34	1.3	150		**CMP056/040**	**B14**
	16	38	1.1	180		**CMP056/040**	**B14**
	12	44	0.9	240		**CMP056/040**	**B14**
63A4 (1400 min^{-1})	**280**	4	5.1	5	**CM030**		**B5/B14**
	187	5	3.8	7.5	**CM030**		**B5/B14**
	140	7	3.1	10	**CM030**		**B5/B14**
	93	10	2.2	15	**CM030**		**B5/B14**
	70	12	1.5	20	**CM030**		**B5/B14**
	56	15	1.4	25	**CM030**		**B5/B14**
	47	16	1.3	30	**CM030**		**B5/B14**
	35	20	1.0	40	**CM030**		**B5/B14**
	28	24	0.8	50	**CM030**		**B5/B14**
	280	4	11.4	5	**CM040**		**B5/B14**
	187	5	8.3	7.5	**CM040**		**B5/B14**
	140	7	6.5	10	**CM040**		**B5/B14**
	93	10	4.5	15	**CM040**		**B5/B14**
	70	13	3.1	20	**CM040**		**B5/B14**
	56	15	2.5	25	**CM040**		**B5/B14**
	47	17	2.8	30	**CM040**		**B5/B14**
	35	21	2.0	40	**CM040**		**B5/B14**
	28	25	1.6	50	**CM040**		**B5/B14**
	23	28	1.3	60	**CM040**		**B5/B14**
	23	34	1.7	60		**CMP063/040**	**B14**
	19	40	1.3	75		**CMP063/040**	**B14**
	18	34	1.0	80	**CM040**		**B5/B14**
	16	45	1.6	90		**CMP063/040**	**B14**
	14	38	0.8	100	**CM040**		**B5/B14**
	12	56	1.1	120		**CMP063/040**	**B14**
	35	22	3.5	40	**CM050**		**B5/B14**
	28	26	2.8	50	**CM050**		**B5/B14**
	23	29	2.3	60	**CM050**		**B5/B14**
	23	34	3.0	60		**CMP063/050**	**B14**
	19	40	2.3	75		**CMP063/050**	**B14**
	18	35	1.7	80	**CM050**		**B5/B14**
	16	47	2.7	90		**CMP063/050**	**B14**
	14	40	1.4	100	**CM050**		**B5/B14**
	12	57	1.9	120		**CMP063/050**	**B14**
	9.3	66	1.6	150		**CMP063/050**	**B14**
	7.8	74	1.3	180		**CMP063/050**	**B14**
	5.8	85	1.0	240		**CMP063/050**	**B14**
	14.0	43	2.7	100	**CM063**		**B5**
	9.3	69	2.8	150		**CMP063/063**	**B14**
	7.8	77	2.3	180		**CMP063/063**	**B14**
	5.8	90	1.7	240		**CMP063/063**	**B14**
	4.7	101	1.4	300		**CMP063/063**	**B14**
63B6 (900 min^{-1})	**180**	5	3.9	5	**CM030**		**B5/B14**
	120	8	3.0	7.5	**CM030**		**B5/B14**
	90	10	2.3	10	**CM030**		**B5/B14**
	60	14	1.7	15	**CM030**		**B5/B14**
	45	18	1.2	20	**CM030**		**B5/B14**
	36	22	1.0	25	**CM030**		**B5/B14**
	30	24	1.1	30	**CM030**		**B5/B14**
	23	30	0.8	40	**CM030**		**B5/B14**

Dati tecnici

Technical data

0.12

P_1 [kW]	n_2 [min^{-1}]	M_2 [Nm]	sf	i			IEC
63B6 (900 min^{-1})	**60**	15	3.7	15	**CM040**		**B5/B14**
	45	19	2.4	20	**CM040**		**B5/B14**
	36	22	2.0	25	**CM040**		**B5/B14**
	30	25	2.2	30	**CM040**		**B5/B14**
	23	31	1.6	40	**CM040**		**B5/B14**
	18	36	1.3	50	**CM040**		**B5/B14**
	15	40	1.1	60	**CM040**		**B5/B14**
	15	50	1.3	60		**CMP063/040**	**B14**
	12	60	1.1	75		**CMP063/040**	**B14**
	11	47	0.9	80	**CM040**		**B5/B14**
	10	64	1.3	90		**CMP063/040**	**B14**
	7.5	78	0.9	120		**CMP063/040**	**B14**
	30	26	3.8	30	**CM050**		**B5/B14**
	23	32	2.7	40	**CM050**		**B5/B14**
	18	38	2.2	50	**CM050**		**B5/B14**
	15	42	1.8	60	**CM050**		**B5/B14**
	15	50	2.5	60		**CMP063/050**	**B14**
	12	59	1.9	75		**CMP063/050**	**B14**
	11	49	1.4	80	**CM050**		**B5/B14**
	10	65	2.3	90		**CMP063/050**	**B14**
	9	55	1.2	100	**CM050**		**B5/B14**
	7.5	79	1.6	120		**CMP063/050**	**B14**
	6.0	90	1.3	150		**CMP063/050**	**B14**
	5.0	99	1.1	180		**CMP063/050**	**B14**
	3.8	114	0.8	240		**CMP063/050**	**B14**
	11,3	53	2.4	80	**CM063**		**B5**
	9,0	60	2.0	100	**CM063**		**B5**
	7.5	82	2.9	120		**CMP063/063**	**B14**
	6.0	95	2.3	150		**CMP063/063**	**B14**
	5.0	106	1.9	180		**CMP063/063**	**B14**
	3.8	120	1.4	240		**CMP063/063**	**B14**
	3.0	135	1.2	300		**CMP063/063**	**B14**

0.18

P_1 [kW]	n_2 [min^{-1}]	M_2 [Nm]	sf	i			IEC
63A2 (2800 min^{-1})	**560**	3	4.8	5	**CM030**		**B5/B14**
	373	4	3.7	7.5	**CM030**		**B5/B14**
	280	5	3.0	10	**CM030**		**B5/B14**
	187	8	2.1	15	**CM030**		**B5/B14**
	140	10	1.4	20	**CM030**		**B5/B14**
	112	12	1.3	25	**CM030**		**B5/B14**
	93	14	1.3	30	**CM030**		**B5/B14**
	70	17	0.9	40	**CM030**		**B5/B14**
	56	20	0.8	50	**CM030**		**B5/B14**
	140	10	3.0	20	**CM040**		**B5/B14**
	112	12	2.3	25	**CM040**		**B5/B14**
	93	14	2.7	30	**CM040**		**B5/B14**
	70	18	1.9	40	**CM040**		**B5/B14**
	56	21	1.5	50	**CM040**		**B5/B14**
	47	24	1.2	60	**CM040**		**B5/B14**
	47	27	1.7	60		**CMP063/040**	**B14**
	37	32	1.4	75		**CMP063/040**	**B14**
	35	29	0.9	80	**CM040**		**B5/B14**
	31	36	1.6	90		**CMP063/040**	**B14**
	23	43	1.1	120		**CMP063/040**	**B14**
	56	22	2.6	50	**CM050**		**B5/B14**
	47	25	2.1	60	**CM050**		**B5/B14**
	47	27	3.0	60		**CMP063/050**	**B14**
	37	32	2.3	75		**CMP063/050**	**B14**

0.18

P_1 [kW]	n_2 [min^{-1}]	M_2 [Nm]	sf	i			IEC
63A2 (2800 min^{-1})	**35**	30	1.5	80	**CM050**		**B5/B14**
	31	37	2.7	90		**CMP063/050**	**B14**
	28	36	1.2	100	**CM050**		**B5/B14**
	23	45	1.9	120		**CMP063/050**	**B14**
	19	53	1.5	150		**CMP063/050**	**B14**
	16	60	1.3	180		**CMP063/050**	**B14**
	12	69	1.0	240		**CMP063/050**	**B14**
	35	32	2.7	80	**CM063**		**B5**
	28	37	2.2	100	**CM063**		**B5**
	19	55	2.7	150		**CMP063/063**	**B14**
	16	63	2.3	180		**CMP063/063**	**B14**
	12	75	1.7	240		**CMP063/063**	**B14**
	9.3	85	1.4	300		**CMP063/063**	**B14**
63B4 (1400 min^{-1})	**280**	5	3.4	5	**CM030**		**B5/B14**
	187	8	2.6	7.5	**CM030**		**B5/B14**
	140	10	2.0	10	**CM030**		**B5/B14**
	93	15	1.4	15	**CM030**		**B5/B14**
	70	18	1.0	20	**CM030**		**B5/B14**
	56	22	0.9	25	**CM030**		**B5/B14**
	47	25	0.9	30	**CM030**		**B5/B14**
	280	5	7.6	5	**CM040**		**B5/B14**
	187	8	5.6	7.5	**CM040**		**B5/B14**
	140	10	4.4	10	**CM040**		**B5/B14**
	93	15	3.0	15	**CM040**		**B5/B14**
	70	19	2.1	20	**CM040**		**B5/B14**
	56	23	1.7	25	**CM040**		**B5/B14**
	47	26	1.9	30	**CM040**		**B5/B14**
	35	32	1.3	40	**CM040**		**B5/B14**
	28	37	1.1	50	**CM040**		**B5/B14**
	23	43	0.8	60	**CM040**		**B5/B14**
	23	51	1.1	60		**CMP063/040**	**B14**
	19	60	0.9	75		**CMP063/040**	**B14**
	16	68	1.0	90		**CMP063/040**	**B14**
	35	33	2.3	40	**CM050**		**B5/B14**
	28	39	1.9	50	**CM050**		**B5/B14**
	23	44	1.6	60	**CM050**		**B5/B14**
	23	51	2.0	60		**CMP063/050**	**B14**
	19	60	1.5	75		**CMP063/050**	**B14**
	18	53	1.1	80	**CM050**		**B5/B14**
	16	70	1.8	90		**CMP063/050**	**B14**
	14	60	0.9	100	**CM050**		**B5/B14**
	12	85	1.3	120		**CMP063/050**	**B14**
	9.3	99	1.0	150		**CMP063/050**	**B14**
	7.8	110	0.9	180		**CMP063/050**	**B14**
	23	46	2.7	60	**CM063**		**B5**
	23	53	3.6	60		**CMP063/063**	**B14**
	19	63	2.7	75		**CMP063/063**	**B14**
	18	56	2.1	80	**CM063**		**B5**
	16	69	3.4	90		**CMP063/063**	**B14**
	14	64	1.8	100	**CM063**		**B5**
	12	87	2.4	120		**CMP063/063**	**B14**
	9.3	103	1.9	150		**CMP063/063**	**B14**
	7.8	115	1.6	180		**CMP063/063**	**B14**
	5.8	136	1.1	240		**CMP063/063**	**B14**
	4.7	152	0.9	300		**CMP063/063**	**B14**

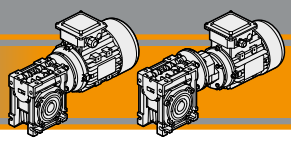

Dati tecnici

Technical data

P_1 [kW]	n_2 [min^{-1}]	M_2 [Nm]	sf	i			IEC
0.18							
71A6 (900 min^{-1})	**180**	8	5.7	5	**CM040**		**B5/B14**
	120	12	4.2	7.5	**CM040**		**B5/B14**
	90	16	3.3	10	**CM040**		**B5/B14**
	60	22	2.4	15	**CM040**		**B5/B14**
	45	28	1.6	20	**CM040**		**B5/B14**
	36	33	1.3	25	**CM040**		**B5/B14**
	30	38	1.5	30	**CM040**		**B5/B14**
	23	46	1.0	40	**CM040**		**B5/B14**
	36	34	2.2	25	**CM050**		**B5/B14**
	30	39	2.5	30	**CM050**		**B5/B14**
	23	47	1.8	40	**CM050**		**B5/B14**
	18	56	1.4	50	**CM050**		**B5/B14**
	15	63	1.2	60	**CM050**		**B5/B14**
	15	75	1.7	60		**CMP071/050**	**B14**
	12	88	1.3	75		**CMP071/050**	**B14**
	11	73	0.9	80	**CM050**		**B5/B14**
	10	98	1.5	90		**CMP071/050**	**B14**
	18	58	2.6	50	**CM063**		**B5/B14**
	15	66	2.1	60	**CM063**		**B5/B14**
	15	77	3.0	60		**CMP071/063**	**B14**
	12	91	2.3	75		**CMP071/063**	**B14**
	11	79	1.6	80	**CM063**		**B5/B14**
	10	101	2.8	90		**CMP071/063**	**B14**
	9	90	1.4	100	**CM063**		**B5/B14**
	7.5	124	2.0	120		**CMP071/063**	**B14**
	6.0	143	1.5	150		**CMP071/063**	**B14**
	5.0	158	1.3	180		**CMP071/063**	**B14**
	11	83	2.3	80	**CM070**		**B5**
	9	94	1.8	100	**CM070**		**B5**
	7.5	128	2.8	120		**CMP071/070**	**B14**
	6.0	149	2.1	150		**CMP071/070**	**B14**
	5.0	165	1.8	180		**CMP071/070**	**B14**
	3.8	193	1.3	240		**CMP071/070**	**B14**
	3.0	213	1.1	300		**CMP071/070**	**B14**
	11	84	2.7	80	**CM075**		**B5**
	9	96	2.1	100	**CM075**		**B5**
	7.5	130	3.3	120		**CMP071/075**	**B14**
	6.0	152	2.5	150		**CMP071/075**	**B14**
	5.0	168	2.1	180		**CMP071/075**	**B14**
	3.8	193	1.6	240		**CMP071/075**	**B14**
	3.0	213	1.3	300		**CMP071/075**	**B14**
	5.0	182	3.2	180		**CMP071/090**	**B14**
	3.8	211	2.4	240		**CMP071/090**	**B14**
	3.0	241	1.9	300		**CMP071/090**	**B14**
0.22							
63C4 (1400 min^{-1})	**280**	6	2.8	5	**CM030**		**B5/B14**
	187	10	2.1	7.5	**CM030**		**B5/B14**
	140	13	1.7	10	**CM030**		**B5/B14**
	93	18	1.2	15	**CM030**		**B5/B14**
	70	23	0.8	20	**CM030**		**B5/B14**

P_1 [kW]	n_2 [min^{-1}]	M_2 [Nm]	sf	i			IEC
0.22							
63C4 (1400 min^{-1})	**280**	7	6.2	5	**CM040**		**B5/B14**
	187	10	4.5	7.5	**CM040**		**B5/B14**
	140	13	3.6	10	**CM040**		**B5/B14**
	93	18	2.5	15	**CM040**		**B5/B14**
	70	23	1.7	20	**CM040**		**B5/B14**
	56	28	1.4	25	**CM040**		**B5/B14**
	47	32	1.5	30	**CM040**		**B5/B14**
	35	39	1.1	40	**CM040**		**B5/B14**
	28	45	0.9	50	**CM040**		**B5/B14**
	23	62	0.9	60		**CMP063/040**	**B14**
	19	73	0.7	75		**CMP063/040**	**B14**
	16	83	0.9	90		**CMP063/040**	**B14**
	56	29	2,5	25	**CM050**		**B5/B14**
	47	32	2,7	30	**CM050**		**B5/B14**
	35	40	1.9	40	**CM050**		**B5/B14**
	28	47	1.5	50	**CM050**		**B5/B14**
	23	54	1.3	60	**CM050**		**B5/B14**
	23	63	1.6	60		**CMP063/050**	**B14**
	19	74	1.2	75		**CMP063/050**	**B14**
	18	65	0.9	80	**CM050**		**B5/B14**
	16	86	1.5	90		**CMP063/050**	**B14**
	14	74	0.8	100	**CM050**		**B5/B14**
	12	104	1.1	120		**CMP063/050**	**B14**
	9.3	121	0.9	150		**CMP063/050**	**B14**
	23	57	2.2	60	**CM063**		**B5**
	23	64	2.9	60		**CMP063/063**	**B14**
	19	77	2.2	75		**CMP063/063**	**B14**
	18	68	1.7	80	**CM063**		**B5**
	16	85	2.8	90		**CMP063/063**	**B14**
	14	78	1.5	100	**CM063**		**B5**
	12	106	1.9	120		**CMP063/063**	**B14**
	9.3	126	1.5	150		**CMP063/063**	**B14**
	7.8	140	1.3	180		**CMP063/063**	**B14**
	5.8	166	0.9	240		**CMP063/063**	**B14**
	4.7	185	0.8	300		**CMP063/063**	**B14**
0.25							
63B2 (2800 min^{-1})	**560**	4	3.4	5	**CM030**		**B5/B14**
	373	6	2.7	7.5	**CM030**		**B5/B14**
	280	7	2.2	10	**CM030**		**B5/B14**
	187	11	1.5	15	**CM030**		**B5/B14**
	140	14	1.0	20	**CM030**		**B5/B14**
	112	17	0.9	25	**CM030**		**B5/B14**
	93	19	1.0	30	**CM030**		**B5/B14**
	140	14	2.2	20	**CM040**		**B5/B14**
	112	17	1.6	25	**CM040**		**B5/B14**
	93	20	1.9	30	**CM040**		**B5/B14**
	70	25	1.4	40	**CM040**		**B5/B14**
	56	29	1.1	50	**CM040**		**B5/B14**
	47	34	0.9	60	**CM040**		**B5/B14**
	47	37	1.2	60		**CMP063/040**	**B14**
	37	44	1.0	75		**CMP063/040**	**B14**
	31	50	1.1	90		**CMP063/040**	**B14**
	23	60	0.8	120		**CMP063/040**	**B14**

Dati tecnici

Technical data

P_1 [kW]	n_2 [min^{-1}]	M_2 [Nm]	sf	i			IEC
0.25							
63B2 (2800 min^{-1})	**70**	25	2.3	40	**CM050**		**B5/B14**
	56	30	1.9	50	**CM050**		**B5/B14**
	47	35	1.5	60	**CM050**		**B5/B14**
	47	38	2.1	60		**CMP063/050**	**B14**
	37	45	1.7	75		**CMP063/050**	**B14**
	35	42	1.1	80	**CM050**		**B5/B14**
	31	51	1.9	90		**CMP063/050**	**B14**
	28	49	0.9	100	**CM050**		**B5/B14**
	23	62	1.4	120		**CMP063/050**	**B14**
	19	74	1.1	150		**CMP063/050**	**B14**
	16	83	0.9	180		**CMP063/050**	**B14**
	35	44	2.0	80	**CM063**		**B5**
	31	53	3.5	90		**CMP063/063**	**B14**
	28	51	1.6	100	**CM063**		**B5**
	23	65	2.5	120		**CMP063/063**	**B14**
	19	76	2.0	150		**CMP063/063**	**B14**
	16	87	1.6	180		**CMP063/063**	**B14**
	12	104	1.2	240		**CMP063/063**	**B14**
	9.3	118	1.0	300		**CMP063/063**	**B14**
71A4 (1400 min^{-1})	**280**	8	5.5	5	**CM040**		**B5/B14**
	187	11	4.0	7.5	**CM040**		**B5/B14**
	140	14	3.1	10	**CM040**		**B5/B14**
	93	21	2.2	15	**CM040**		**B5/B14**
	70	27	1.5	20	**CM040**		**B5/B14**
	56	32	1.2	25	**CM040**		**B5/B14**
	47	36	1.3	30	**CM040**		**B5/B14**
	35	44	0.9	40	**CM040**		**B5/B14**
	70	27	2.7	20	**CM050**		**B5/B14**
	56	32	2.2	25	**CM050**		**B5/B14**
	47	37	2.4	30	**CM050**		**B5/B14**
	35	46	1.7	40	**CM050**		**B5/B14**
	28	54	1.3	50	**CM050**		**B5/B14**
	23	61	1.1	60	**CM050**		**B5/B14**
	23	71	1.4	60		**CMP071/050**	**B14**
	19	84	1.1	75		**CMP071/050**	**B14**
	18	74	0.8	80	**CM050**		**B5/B14**
	16	98	1.3	90		**CMP071/050**	**B14**
	28	56	2.4	50	**CM063**		**B5/B14**
	23	64	2.0	60	**CM063**		**B5/B14**
	23	73	2.6	60		**CMP071/063**	**B14**
	19	88	2.0	75		**CMP071/063**	**B14**
	18	78	1.5	80	**CM063**		**B5/B14**
	16	96	2.4	90		**CMP071/063**	**B14**
	14	89	1.3	100	**CM063**		**B5/B14**
	12	120	1.7	120		**CMP071/063**	**B14**
	9.3	143	1.3	150		**CMP071/063**	**B14**
	7.8	159	1.1	180		**CMP071/063**	**B14**
	18	82	1.9	80	**CM070**		**B5**
	16	99	3.1	90		**CMP071/070**	**B14**
	14	90	1.7	100	**CM070**		**B5**
	12	122	2.2	120		**CMP071/070**	**B14**
	9.3	143	1.8	150		**CMP071/070**	**B14**
	7.8	159	1.4	180		**CMP071/070**	**B14**
	5.8	189	1.1	240		**CMP071/070**	**B14**
	4.7	211	1.9	300		**CMP071/070**	**B14**

P_1 [kW]	n_2 [min^{-1}]	M_2 [Nm]	sf	i			IEC
0.25							
71A4 (1400 min^{-1})	**18**	82	2.4	80	**CM075**		**B5**
	16	101	4.0	90		**CMP071/075**	**B14**
	14	96	1.9	100	**CM075**		**B5**
	12	124	2.9	120		**CMP071/075**	**B14**
	9.3	145	2.3	150		**CMP071/075**	**B14**
	7.8	162	1.9	180		**CMP071/075**	**B14**
	5.8	193	1.4	240		**CMP071/075**	**B14**
	4.7	216	1.1	300		**CMP071/075**	**B14**
	7.8	177	2.8	180		**CMP071/090**	**B14**
	5.8	209	2.2	240		**CMP071/090**	**B14**
	4.7	236	1.7	300		**CMP071/090**	**B14**
71B6 (900 min^{-1})	**180**	11	4.1	5	**CM040**		**B5/B14**
	120	17	3.1	7.5	**CM040**		**B5/B14**
	90	22	2.4	10	**CM040**		**B5/B14**
	60	31	1.8	15	**CM040**		**B5/B14**
	45	39	1.1	20	**CM040**		**B5/B14**
	36	46	0.9	25	**CM040**		**B5/B14**
	30	53	1.1	30	**CM040**		**B5/B14**
	23	64	0.8	40	**CM040**		**B5/B14**
	45	40	2.0	20	**CM050**		**B5/B14**
	36	48	1.6	25	**CM050**		**B5/B14**
	30	54	1.8	30	**CM050**		**B5/B14**
	23	66	1.3	40	**CM050**		**B5/B14**
	18	78	1.0	50	**CM050**		**B5/B14**
	15	88	0.9	60	**CM050**		**B5/B14**
	15	105	1.2	60		**CMP071/050**	**B14**
	12	123	0.9	75		**CMP071/050**	**B14**
	10	136	1.1	90		**CMP071/050**	**B14**
	23	69	2.3	40	**CM063**		**B5/B14**
	18	81	1.9	50	**CM063**		**B5/B14**
	15	92	1.5	60	**CM063**		**B5/B14**
	15	108	2.1	60		**CMP071/063**	**B14**
	12	127	1.7	75		**CMP071/063**	**B14**
	11	110	1.2	80	**CM063**		**B5/B14**
	10	140	2.0	90		**CMP071/063**	**B14**
	9	125	1.0	100	**CM063**		**B5/B14**
	7.5	172	1.4	120		**CMP071/063**	**B14**
	6.0	199	1.1	150		**CMP071/063**	**B14**
	5.0	220	0.9	180		**CMP071/063**	**B14**
	18	84	2.6	50	**CM070**		**B5**
	15	96	2.2	60	**CM070**		**B5**
	11	115	1.6	80	**CM070**		**B5**
	10	145	2.9	90		**CMP071/070**	**B14**
	9	130	1.3	100	**CM070**		**B5**
	7.5	178	2.0	120		**CMP071/070**	**B14**
	6.0	207	1.5	150		**CMP071/070**	**B14**
	5.0	229	1.3	180		**CMP071/070**	**B14**
	3.8	268	0.9	240		**CMP071/070**	**B14**
	3.0	296	0.8	300		**CMP071/070**	**B14**

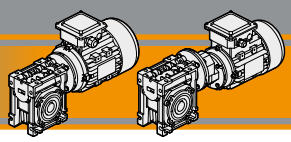

Dati tecnici

Technical data

P_1 [kW]	n_2 [min^{-1}]	M_2 [Nm]	sf	i			IEC
0.25							
71B6 (900 min^{-1})	**15**	96	2.6	60	**CM075**		**B5**
	11	117	1.9	80	**CM075**		**B5**
	10	147	3.1	90		**CMP071/075**	**B14**
	9	133	1.5	100	**CM075**		**B5**
	7.5	181	2.4	120		**CMP071/075**	**B14**
	6.0	211	1.8	150		**CMP071/075**	**B14**
	5.0	234	1.5	180		**CMP071/075**	**B14**
	3.8	268	1.1	240		**CMP071/075**	**B14**
	3.0	296	0.9	300		**CMP071/075**	**B14**
	6.0	222	2.9	150		**CMP071/090**	**B14**
	5.0	253	2.3	180		**CMP071/090**	**B14**
	3.8	293	1.7	240		**CMP071/090**	**B14**
	3.0	335	1.4	300		**CMP071/090**	**B14**
0.37							
71A2 (2800 min^{-1})	**560**	6	5.1	5	**CM040**		**B5/B14**
	373	8	3.7	7.5	**CM040**		**B5/B14**
	280	11	3.0	10	**CM040**		**B5/B14**
	187	16	2.2	15	**CM040**		**B5/B14**
	140	21	1.5	20	**CM040**		**B5/B14**
	112	25	1.1	25	**CM040**		**B5/B14**
	93	29	1.3	30	**CM040**		**B5/B14**
	70	37	0.9	40	**CM040**		**B5/B14**
	112	26	2.0	25	**CM050**		**B5/B14**
	93	30	2.3	30	**CM050**		**B5/B14**
	70	37	1.6	40	**CM050**		**B5/B14**
	56	45	1.3	50	**CM050**		**B5/B14**
	47	51	1.0	60	**CM050**		**B5/B14**
	47	56	1.4	60		**CMP071/050**	**B14**
	37	67	1.1	75		**CMP071/050**	**B14**
	31	76	1.3	90		**CMP071/050**	**B14**
	56	46	2.2	50	**CM063**		**B5/B14**
	47	53	1.8	60	**CM063**		**B5/B14**
	47	58	2.7	60		**CMP071/063**	**B14**
	37	70	2.0	75		**CMP071/063**	**B14**
	35	66	1.3	80	**CM063**		**B5/B14**
	31	78	2.4	90		**CMP071/063**	**B14**
	28	76	1.1	100	**CM063**		**B5/B14**
	23	96	1.7	120		**CMP071/063**	**B14**
	19	113	1.3	150		**CMP071/063**	**B14**
	16	129	1.1	180		**CMP071/063**	**B14**
	35	68	1.9	80	**CM070**		**B5**
	28	78	1.5	100	**CM070**		**B5**
	23	99	2.4	120		**CMP071/070**	**B14**
	19	117	1.8	150		**CMP071/070**	**B14**
	16	134	1.6	180		**CMP071/070**	**B14**
	12	160	1.2	240		**CMP071/070**	**B14**
	9.3	182	0.9	300		**CMP071/070**	**B14**
	35	68	2.2	80	**CM075**		**B5**
	28	80	1.7	100	**CM075**		**B5**
	23	101	2.8	120		**CMP071/075**	**B14**
	19	119	2.2	150		**CMP071/075**	**B14**
	16	134	1.9	180		**CMP071/075**	**B14**
	12	163	1.4	240		**CMP071/075**	**B14**
	9.3	186	1.1	300		**CMP071/075**	**B14**

P_1 [kW]	n_2 [min^{-1}]	M_2 [Nm]	sf	i			IEC
0.37							
71A2 (2800 min^{-1})	**16**	142	2.9	180		**CMP071/090**	**B14**
	12	175	2.2	240		**CMP071/090**	**B14**
	9.3	200	1.7	300		**CMP071/090**	**B14**
71B4 (1400 min^{-1})	**280**	11	3.7	5	**CM040**		**B5/B14**
	187	16	2.7	7.5	**CM040**		**B5/B14**
	140	21	2.1	10	**CM040**		**B5/B14**
	93	31	1.5	15	**CM040**		**B5/B14**
	70	39	1.0	20	**CM040**		**B5/B14**
	56	47	0.8	25	**CM040**		**B5/B14**
	47	53	0.9	30	**CM040**		**B5/B14**
	93	31	2.6	15	**CM050**		**B5/B14**
	70	40	1.8	20	**CM050**		**B5/B14**
	56	48	1.5	25	**CM050**		**B5/B14**
	47	55	1.6	30	**CM050**		**B5/B14**
	35	68	1.1	40	**CM050**		**B5/B14**
	28	80	0.9	50	**CM050**		**B5/B14**
	23	91	0.8	60	**CM050**		**B5/B14**
	23	105	1.0	60		**CMP071/050**	**B14**
	19	124	0.7	75		**CMP071/050**	**B14**
	16	145	0.9	90		**CMP071/050**	**B14**
	35	71	2.0	40	**CM063**		**B5/B14**
	28	83	1.6	50	**CM063**		**B5/B14**
	23	95	1.3	60	**CM063**		**B5/B14**
	23	108	1.7	60		**CMP071/063**	**B14**
	19	130	1.3	75		**CMP071/063**	**B14**
	18	115	1.0	80	**CM063**		**B5/B14**
	16	142	1.6	90		**CMP071/063**	**B14**
	14	131	0.9	100	**CM063**		**B5/B14**
	12	178	1.2	120		**CMP071/063**	**B14**
	9.3	211	0.9	150		**CMP071/063**	**B14**
	7.8	236	0.8	180		**CMP071/063**	**B14**
	28	86	2.2	50	**CM070**		**B5**
	23	98	1.8	60	**CM070**		**B5**
	23	110	2.6	60		**CMP071/070**	**B14**
	19	132	1.9	75		**CMP071/070**	**B14**
	18	121	1.3	80	**CM070**		**B5**
	16	147	2.3	90		**CMP071/070**	**B14**
	14	134	1.2	100	**CM070**		**B5**
	12	181	1.7	120		**CMP071/070**	**B14**
	9.3	211	1.3	150		**CMP071/070**	**B14**
	7.8	236	1.1	180		**CMP071/070**	**B14**
	5.8	279	0.8	240		**CMP071/070**	**B14**
	28	87	2.6	50	**CM075**		**B5**
	23	100	2.2	60	**CM075**		**B5**
	23	111	3.0	60		**CMP071/075**	**B14**
	19	134	2.2	75		**CMP071/075**	**B14**
	18	121	1.6	80	**CM075**		**B5**
	16	149	2.7	90		**CMP071/075**	**B14**
	14	141	1.3	100	**CM075**		**B5**
	12	184	2.0	120		**CMP071/075**	**B14**
	9.3	215	1.5	150		**CMP071/075**	**B14**
	7.8	240	1.3	180		**CMP071/075**	**B14**
	5.8	285	0.9	240		**CMP071/075**	**B14**
	4.7	319	0.8	300		**CMP071/075**	**B14**

Dati tecnici

Technical data

P_1 [kW]	n_2 [min^{-1}]	M_2 [Nm]	sf	i			IEC
0.37							
71B4 (1400 min^{-1})	**18**	129	2.5	80	**CM090**		**B5**
	14	151	2.0	100	**CM090**		**B5**
	12	193	3.2	120		**CMP071/090**	**B14**
	9.3	226	2.4	150		**CMP071/090**	**B14**
	7.8	263	1.9	180		**CMP071/090**	**B14**
	5.8	309	1.5	240		**CMP071/090**	**B14**
	4.7	349	1.2	300		**CMP071/090**	**B14**
80A6 (900 min^{-1})	**180**	17	5.2	5	**CM050**		**B5/B14**
	120	25	3.7	7.5	**CM050**		**B5/B14**
	90	33	2.9	10	**CM050**		**B5/B14**
	60	47	2.0	15	**CM050**		**B5/B14**
	45	59	1.4	20	**CM050**		**B5/B14**
	36	71	1.1	25	**CM050**		**B5/B14**
	30	80	1.2	30	**CM050**		**B5/B14**
	45	61	2.5	20	**CM063**		**B5/B14**
	36	74	1.9	25	**CM063**		**B5/B14**
	30	82	2.3	30	**CM063**		**B5/B14**
	23	102	1.6	40	**CM063**		**B5/B14**
	18	120	1.3	50	**CM063**		**B5/B14**
	15	137	1.0	60	**CM063**		**B5/B14**
	15	159	1.4	60		**CMP080/063**	**B14**
	12	188	1.1	75		**CMP080/063**	**B14**
	10	208	1.4	90		**CMP080/063**	**B14**
	23	105	2.3	40	**CM070**		**B5/B14**
	18	124	1.7	50	**CM070**		**B5/B14**
	15	141	1.5	60	**CM070**		**B5/B14**
	15	164	2.1	60		**CMP080/070**	**B14**
	12	193	1.6	75		**CMP080/070**	**B14**
	11	170	1.1	80	**CM070**		**B5/B14**
	10	215	1.9	90		**CMP080/070**	**B14**
	7.5	263	1.4	120		**CMP080/070**	**B14**
	6.0	306	1.0	150		**CMP080/070**	**B14**
	18	126	2.1	50	**CM075**		**B5/B14**
	15	141	1.8	60	**CM075**		**B5/B14**
	15	164	2.5	60		**CMP080/075**	**B14**
	12	196	1.9	75		**CMP080/075**	**B14**
	11	173	1.3	80	**CM075**		**B5/B14**
	10	215	2.3	90		**CMP080/075**	**B14**
	9	196	1.0	100	**CM075**		**B5/B14**
	7.5	268	1.6	120		**CMP080/075**	**B14**
	11	188	2.0	80	**CM090**		**B5/B14**
	10	229	3.7	90		**CMP080/090**	**B14**
	9	216	1.6	100	**CM090**		**B5/B14**
	7.5	282	2.6	120		**CMP080/090**	**B14**
	6.0	329	2.0	150		**CMP080/090**	**B14**
	5.0	374	1.5	180		**CMP080/090**	**B14**
	6.0	346	3.4	150		**CMP080/110**	**B14**
	5.0	402	2.5	180		**CMP080/110**	**B14**
	3.8	480	1.8	240		**CMP080/110**	**B14**
	3.0	543	1.4	300		**CMP080/110**	**B14**
	3.8	471	2.4	240		**CMP080/130**	**B14**
	3.0	554	1.8	300		**CMP080/130**	**B14**

P_1 [kW]	n_2 [min^{-1}]	M_2 [Nm]	sf	i			IEC
0.55							
71B2 (2800 min^{-1})	**560**	8	3.4	5	**CM040**		**B5/B14**
	373	13	2.5	7.5	**CM040**		**B5/B14**
	280	16	2.0	10	**CM040**		**B5/B14**
	187	24	1.5	15	**CM040**		**B5/B14**
	140	31	1.0	20	**CM040**		**B5/B14**
	140	32	1.7	20	**CM050**		**B5/B14**
	112	38	1.3	25	**CM050**		**B5/B14**
	93	44	1.5	30	**CM050**		**B5/B14**
	70	56	1.1	40	**CM050**		**B5/B14**
	56	67	0.9	50	**CM050**		**B5/B14**
	47	83	1.0	60		**CMP071/050**	**B14**
	37	99	0.8	75		**CMP071/050**	**B14**
	31	113	0.9	90		**CMP071/050**	**B14**
	70	57	2.0	40	**CM063**		**B5/B14**
	56	68	1.5	50	**CM063**		**B5/B14**
	47	79	1.2	60	**CM063**		**B5/B14**
	47	86	1.8	60		**CMP071/063**	**B14**
	37	103	1.3	75		**CMP071/063**	**B14**
	35	98	0.9	80	**CM063**		**B5/B14**
	31	116	1.6	90		**CMP071/063**	**B14**
	23	143	1.1	120		**CMP071/063**	**B14**
	19	168	0.9	150		**CMP071/063**	**B14**
	47	81	1.8	60	**CM070**		**B5**
	47	87	2.6	60		**CMP071/070**	**B14**
	37	106	1.9	75		**CMP071/070**	**B14**
	35	101	1.3	80	**CM070**		**B5**
	31	119	2.3	90		**CMP071/070**	**B14**
	28	118	1.0	100	**CM070**		**B5**
	23	148	1.6	120		**CMP071/070**	**B14**
	19	174	1.2	150		**CMP071/070**	**B14**
	16	199	1.1	180		**CMP071/070**	**B14**
	12	238	0.8	240		**CMP071/070**	**B14**
	47	81	2.1	60	**CM075**		**B5**
	47	87	3.2	60		**CMP071/075**	**B14**
	37	106	2.3	75		**CMP071/075**	**B14**
	35	101	1.5	80	**CM075**		**B5**
	31	121	2.7	90		**CMP071/075**	**B14**
	28	118	1.2	100	**CM075**		**B5**
	23	150	1.9	120		**CMP071/075**	**B14**
	19	176	1.5	150		**CMP071/075**	**B14**
	16	199	1.3	180		**CMP071/075**	**B14**
	12	243	0.9	240		**CMP071/075**	**B14**
	35	107	2.4	80	**CM090**		**B5**
	28	126	1.8	100	**CM090**		**B5**
	23	157	3.2	120		**CMP071/090**	**B14**
	19	188	2.4	150		**CMP071/090**	**B14**
	16	212	2.0	180		**CMP071/090**	**B14**
	12	260	1.4	240		**CMP071/090**	**B14**
	9.3	298	1.1	300		**CMP071/090**	**B14**

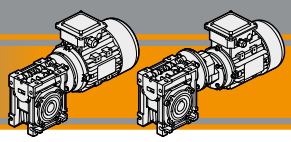

Dati tecnici

Technical data

P_1 [kW]	n_2 [min^{-1}]	M_2 [Nm]	sf	i			IEC
0.55							
71C4 (1400 min^{-1})	**280**	17	2.5	5	**CM040**		**B5/B14**
	187	24	1.8	7.5	**CM040**		**B5/B14**
	140	32	1.4	10	**CM040**		**B5/B14**
	93	46	1.0	15	**CM040**		**B5/B14**
	140	32	2.6	10	**CM050**		**B5/B14**
	93	46	1.8	15	**CM050**		**B5/B14**
	70	59	1.2	20	**CM050**		**B5/B14**
	56	71	1.0	25	**CM050**		**B5/B14**
	47	81	1.1	30	**CM050**		**B5/B14**
	35	101	0.8	40	**CM050**		**B5/B14**
	70	61	2.2	20	**CM063**		**B5/B14**
	56	73	1.8	25	**CM063**		**B5/B14**
	47	84	2.0	30	**CM063**		**B5/B14**
	35	105	1.4	40	**CM063**		**B5/B14**
	28	124	1.1	50	**CM063**		**B5/B14**
	23	142	0.9	60	**CM063**		**B5/B14**
	23	161	1.2	60		**CMP071/063**	**B14**
	19	193	0.9	75		**CMP071/063**	**B14**
	16	212	1.1	90		**CMP071/063**	**B14**
	12	265	0.8	120		**CMP071/063**	**B14**
	56	75	2.4	25	**CM070**		**B5**
	35	108	1.9	40	**CM070**		**B5**
	28	128	1.5	50	**CM070**		**B5**
	23	146	1.2	60	**CM070**		**B5**
	23	163	1.7	60		**CMP071/070**	**B14**
	19	196	1.3	75		**CMP071/070**	**B14**
	18	180	0.9	80	**CM070**		**B5**
	16	218	1.6	90		**CMP071/070**	**B14**
	12	269	1.1	120		**CMP071/070**	**B14**
	9.3	314	0.9	150		**CMP071/070**	**B14**
	35	110	2.3	40	**CM075**		**B5**
	28	129	1.8	50	**CM075**		**B5**
	23	149	1.5	60	**CM075**		**B5**
	23	165	2.0	60		**CMP071/075**	**B14**
	19	199	1.5	75		**CMP071/075**	**B14**
	18	180	1.1	80	**CM075**		**B5**
	16	222	1.8	90		**CMP071/075**	**B14**
	14	210	0.9	100	**CM075**		**B5**
	12	274	1.3	120		**CMP071/075**	**B14**
	9.3	320	1.0	150		**CMP071/075**	**B14**
	7.8	357	0.9	180		**CMP071/075**	**B14**
	18	192	1.7	80	**CM090**		**B5**
	16	232	3.0	90		**CMP071/090**	**B14**
	14	225	1.3	100	**CM090**		**B5**
	12	287	2.2	120		**CMP071/090**	**B14**
	9.3	336	1.6	150		**CMP071/090**	**B14**
	7.8	390	1.3	180		**CMP071/090**	**B14**
	5.8	459	1.0	240		**CMP071/090**	**B14**

P_1 [kW]	n_2 [min^{-1}]	M_2 [Nm]	sf	i			IEC
0.55							
80A4 (1400 min^{-1})	**280**	17	4.5	5	**CM050**		**B5/B14**
	187	24	3.2	7.5	**CM050**		**B5/B14**
	140	32	2.6	10	**CM050**		**B5/B14**
	93	46	1.8	15	**CM050**		**B5/B14**
	70	59	1.2	20	**CM050**		**B5/B14**
	56	71	1.0	25	**CM050**		**B5/B14**
	47	81	1.1	30	**CM050**		**B5/B14**
	70	61	2.2	20	**CM063**		**B5/B14**
	56	73	1.8	25	**CM063**		**B5/B14**
	47	84	2.0	30	**CM063**		**B5/B14**
	35	105	1.4	40	**CM063**		**B5/B14**
	28	124	1.1	50	**CM063**		**B5/B14**
	23	142	0.9	60	**CM063**		**B5/B14**
	23	161	1.2	60		**CMP080/063**	**B14**
	19	193	0.9	75		**CMP080/063**	**B14**
	16	212	1.1	90		**CMP080/063**	**B14**
	56	75	2.4	25	**CM070**		**B5/B14**
	35	108	1.9	40	**CM070**		**B5/B14**
	28	128	1.5	50	**CM070**		**B5/B14**
	23	146	1.2	60	**CM070**		**B5/B14**
	23	163	1.7	60		**CMP080/070**	**B14**
	19	196	1.3	75		**CMP080/070**	**B14**
	18	180	0.9	80	**CM070**		**B5/B14**
	16	218	1.6	90		**CMP080/070**	**B14**
	12	269	1.1	120		**CMP080/070**	**B14**
	35	110	2.3	40	**CM075**		**B5/B14**
	28	129	1.8	50	**CM075**		**B5/B14**
	23	149	1.5	60	**CM075**		**B5/B14**
	23	165	2.0	60		**CMP080/075**	**B14**
	19	199	1.5	75		**CMP080/075**	**B14**
	18	180	1.1	80	**CM075**		**B5/B14**
	16	222	1.8	90		**CMP080/075**	**B14**
	14	210	0.9	100	**CM075**		**B5/B14**
	12	274	1.3	120		**CMP080/075**	**B14**
	9	320	1.0	150		**CMP080/075**	**B14**
	23	158	2.2	60	**CM090**		**B5/B14**
	18	192	1.7	80	**CM090**		**B5/B14**
	16	232	3.0	90		**CMP080/090**	**B14**
	14	225	1.3	100	**CM090**		**B5/B14**
	12	287	2.2	120		**CMP080/090**	**B14**
	9.3	336	1.6	150		**CMP080/090**	**B14**
	7.8	390	1.3	180		**CMP080/090**	**B14**
	3.8	459	1.0	240		**CMP080/090**	**B14**
	18	204	2.8	80	**CM110**		**B5**
	14	240	2.2	100	**CM110**		**B5**
	9.3	358	2.8	150		**CMP080/110**	**B14**
	7.8	410	2.2	180		**CMP080/110**	**B14**
	5.8	503	1.5	240		**CMP080/110**	**B14**
	4.7	574	1.2	300		**CMP080/110**	**B14**
	7.8	424	2.6	180		**CMP080/130**	**B14**
	5.8	512	1.9	240		**CMP080/130**	**B14**
	4.7	585	1.5	300		**CMP080/130**	**B14**

Dati tecnici

Technical data

0.55

P_1 [kW]	n_2 [min^{-1}]	M_2 [Nm]	sf	i			IEC
80B6 (900 min^{-1})	**180**	26	3.4	5	**CM050**		**B5/B14**
	120	37	2.5	7.5	**CM050**		**B5/B14**
	90	49	1.9	10	**CM050**		**B5/B14**
	60	69	1.4	15	**CM050**		**B5/B14**
	45	88	0.9	20	**CM050**		**B5/B14**
	60	71	2.5	15	**CM063**		**B5/B14**
	45	91	1.7	20	**CM063**		**B5/B14**
	36	109	1.3	25	**CM063**		**B5/B14**
	30	123	1.5	30	**CM063**		**B5/B14**
	23	152	1.1	40	**CM063**		**B5/B14**
	18	178	0.8	50	**CM063**		
	15	237	1.0	60		**CMP080/063**	**B14**
	12	279	0.8	75		**CMP080/063**	**B14**
	10	309	0.9	90		**CMP080/063**	**B14**
	45	92	2.5	20	**CM070**		**B5/B14**
	36	112	1.8	25	**CM070**		**B5/B14**
	30	126	2.2	30	**CM070**		**B5/B14**
	23	156	1.5	40	**CM070**		**B5/B14**
	18	184	1.2	50	**CM070**		**B5/B14**
	15	210	1.0	60	**CM070**		**B5/B14**
	15	244	1.4	60		**CMP080/070**	**B14**
	12	287	1.1	75		**CMP080/070**	**B14**
	10	319	1.3	90		**CMP080/070**	**B14**
	7.5	391	0.9	120		**CMP080/070**	**B14**
	36	112	2.2	25	**CM075**		**B5/B14**
	30	128	2.6	30	**CM075**		**B5/B14**
	23	159	1.8	40	**CM075**		**B5/B14**
	18	187	1.4	50	**CM075**		**B5/B14**
	15	214	1.2	60	**CM075**		**B5/B14**
	15	244	1.7	60		**CMP080/075**	**B14**
	12	292	1.3	75		**CMP080/075**	**B14**
	11	257	0.9	80	**CM075**		**B5/B14**
	10	319	1.6	90		**CMP080/075**	**B14**
	7.5	398	1.1	120		**CMP080/075**	**B14**
	6.0	463	0.8	150		**CMP080/075**	**B14**
	15	228	1.8	60	**CM090**		**B5/B14**
	15	254	2.8	60		**CMP080/090**	**B14**
	12	305	2.1	75		**CMP080/090**	**B14**
	11	280	1.4	80	**CM090**		**B5/B14**
	10	340	2.5	90		**CMP080/090**	**B14**
	9	321	1.1	100	**CM090**		**B5/B14**
	7.5	419	1.8	120		**CMP080/090**	**B14**
	6.0	489	1.3	150		**CMP080/090**	**B14**
	5.0	556	1.0	180		**CMP080/090**	**B14**
	3.8	645	0.8	240		**CMP080/090**	**B14**
	11	294	2.2	80	**CM110**		**B5**
	9	344	1.7	100	**CM110**		**B5**
	7.5	439	3.0	120		**CMP080/110**	**B14**
	6.0	515	2.3	150		**CMP080/110**	**B14**
	5.0	597	1.7	180		**CMP080/110**	**B14**
	3.8	714	1.2	240		**CMP080/110**	**B14**
	3.0	806	1.0	300		**CMP080/110**	**B14**
	5.0	587	2.2	180		**CMP080/130**	**B14**
	3.8	700	1.6	240		**CMP080/130**	**B14**
	3.0	824	1.2	300		**CMP080/130**	**B14**

0.75

P_1 [kW]	n_2 [min^{-1}]	M_2 [Nm]	sf	i			IEC
80A2 (2800 min^{-1})	**560**	12	4.6	5	**CM050**		**B5/B14**
	373	17	3.3	7.5	**CM050**		**B5/B14**
	280	23	2.7	10	**CM050**		**B5/B14**
	187	33	1.9	15	**CM050**		**B5/B14**
	140	43	1.3	20	**CM050**		**B5/B14**
	112	52	1.0	25	**CM050**		**B5/B14**
	93	60	1.1	30	**CM050**		**B5/B14**
	140	43	2.4	20	**CM063**		**B5/B14**
	112	53	1.8	25	**CM063**		**B5/B14**
	93	61	2.1	30	**CM063**		**B5/B14**
	70	78	1.4	40	**CM063**		**B5/B14**
	56	93	1.1	50	**CM063**		**B5/B14**
	47	107	0.9	60	**CM063**		**B5/B14**
	47	117	1.3	60		**CMP080/063**	**B14**
	37	141	1.0	75		**CMP080/063**	**B14**
	31	158	1.2	90		**CMP080/063**	**B14**
	56	96	1.6	50	**CM070**		**B5/B14**
	47	111	1.3	60	**CM070**		**B5/B14**
	47	119	1.9	60		**CMP080/070**	**B14**
	37	145	1.4	75		**CMP080/070**	**B14**
	35	139	0.9	80	**CM070**		**B5/B14**
	31	162	1.7	90		**CMP080/070**	**B14**
	23	202	1.2	120		**CMP080/070**	**B14**
	70	80	2.5	40	**CM075**		**B5/B14**
	56	96	1.9	50	**CM075**		**B5/B14**
	47	111	1.5	60	**CM075**		**B5/B14**
	47	119	2.3	60		**CMP080/075**	**B14**
	37	145	1.7	75		**CMP080/075**	**B14**
	35	139	1.1	80	**CM075**		**B5/B14**
	31	165	2.0	90		**CMP080/075**	**B14**
	28	161	0.9	100	**CM075**		**B5/B14**
	23	205	1.4	120		**CMP080/075**	**B14**
	19	241	1.1	150		**CMP080/075**	**B14**
	47	115	2.4	60	**CM090**		**B5/B14**
	35	145	1.8	80	**CM090**		**B5/B14**
	31	171	3.3	90		**CMP080/090**	**B14**
	28	171	1.3	100	**CM090**		**B5/B14**
	23	214	2.3	120		**CMP080/090**	**B5/B14**
	19	256	1.7	150		**CMP080/090**	**B14**
	16	289	1.4	180		**CMP080/090**	**B14**
	12	355	1.1	240		**CMP080/090**	**B14**
	28	179	2.2	100	**CM110**		**B5**
	19	271	3.0	150		**CMP080/110**	**B14**
	16	307	2.4	180		**CMP080/110**	**B14**
	12	379	1.7	240		**CMP080/110**	**B14**
	9.3	444	1.3	300		**CMP080/110**	**B14**
	16	316	2.9	180		**CMP080/130**	**B14**
	12	385	2.2	240		**CMP080/130**	**B14**
	9.3	444	1.7	300		**CMP080/130**	**B14**

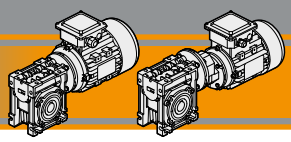

Dati tecnici

Technical data

0.75

	P_1 [kW]	n_2 [min^{-1}]	M_2 [Nm]	sf	i			IEC
80B4 (1400 min^{-1})	**280**	23	3.3	5	**CM050**		**B5/B14**
	187	33	2.4	7.5	**CM050**		**B5/B14**
	140	43	1.9	10	**CM050**		**B5/B14**
	93	63	1.3	15	**CM050**		**B5/B14**
	70	81	0.9	20	**CM050**		**B5/B14**
	56	97	0.7	25	**CM050**		**B5/B14**
	47	111	0.8	30	**CM050**		**B5/B14**
	93	64	2.4	15	**CM063**		**B5/B14**
	70	83	1.6	20	**CM063**		**B5/B14**
	56	100	1.4	25	**CM063**		**B5/B14**
	47	115	1.4	30	**CM063**		**B5/B14**
	35	143	1.0	40	**CM063**		**B5/B14**
	28	169	0.8	50	**CM063**		**B5/B14**
	23	220	0.9	60		**CMP080/063**	**B14**
	19	263	0.7	75		**CMP080/063**	**B14**
	16	289	0.8	90		**CMP080/063**	**B14**
	70	85	2.4	20	**CM070**		**B5/B14**
	56	102	1.8	25	**CM070**		**B5/B14**
	47	118	2.1	30	**CM070**		**B5/B14**
	35	149	1.4	40	**CM070**		**B5/B14**
	28	177	1.1	50	**CM070**		**B5/B14**
	23	203	0.9	60	**CM070**		**B5/B14**
	23	223	1.3	60		**CMP080/070**	**B14**
	19	267	0.9	75		**CMP080/070**	**B14**
	16	298	1.1	90		**CMP080/070**	**B14**
	12	367	0.8	120		**CMP080/070**	**B14**
	70	85	2.8	20	**CM075**		**B5/B14**
	56	102	2.2	25	**CM075**		**B5/B14**
	47	118	2.4	30	**CM075**		**B5/B14**
	35	149	1.7	40	**CM075**		**B5/B14**
	28	177	1.3	50	**CM075**		**B5/B14**
	23	203	1.1	60	**CM075**		**B5/B14**
	23	226	1.5	60		**CMP080/075**	**B14**
	19	271	1.1	75		**CMP080/075**	**B14**
	18	246	0.8	80	**CM075**		**B5/B14**
	16	302	1.3	90		**CMP080/075**	**B14**
	12	373	1.0	120		**CMP080/075**	**B14**
	9	436	0.8	150		**CMP080/075**	**B14**
	35	156	2.8	40	**CM090**		**B5/B14**
	28	184	2.1	50	**CM090**		**B5/B14**
	23	212	1.6	60	**CM090**		**B5/B14**
	23	235	2.4	60		**CMP080/090**	**B14**
	19	282	1.8	75		**CMP080/090**	**B14**
	18	262	1.2	80	**CM090**		**B5/B14**
	16	316	2.2	90		**CMP080/090**	**B14**
	14	307	1.0	100	**CM090**		**B5/B14**
	12	391	1.6	120		**CMP080/090**	**B14**
	9.3	459	1.2	150		**CMP080/090**	**B14**
	7.8	535	0.9	180		**CMP080/090**	**B14**
	23	224	2.8	60	**CM110**		**B5**
	19	293	3.1	75		**CMP080/110**	**B14**
	18	278	2.0	80	**CM110**		**B5**
	16	325	3.5	90		**CMP080/110**	**B14**
	14	327	1.6	100	**CM110**		**B5**
	12	415	2.6	120		**CMP080/110**	**B14**
	9.3	489	2.0	150		**CMP080/110**	**B14**

0.75

	P_1 [kW]	n_2 [min^{-1}]	M_2 [Nm]	sf	i			IEC
80B4 (1400 min^{-1})	**7.8**	560	1.6	180		**CMP080/110**	**B14**
	5.8	686	1.1	240		**CMP080/110**	**B14**
	4.7	782	0.9	300		**CMP080/110**	**B14**
	14	327	2.2	100	**CM130**		**B5**
	9.3	504	2.4	150		**CMP080/130**	**B14**
	7.8	578	1.9	180		**CMP080/130**	**B14**
	5.8	698	1.4	240		**CMP080/130**	**B14**
	4.7	797	1.1	300		**CMP080/130**	**B14**
90S6 (900 min^{-1})	**180**	35	4.6	5	**CM063**		**B5/B14**
	120	51	3.3	7.5	**CM063**		**B5/B14**
	90	67	2.6	10	**CM063**		**B5/B14**
	60	97	1.8	15	**CM063**		**B5/B14**
	45	124	1.2	20	**CM063**		**B5/B14**
	36	149	0.9	25	**CM063**		**B5/B14**
	30	167	1.1	30	**CM063**		**B5/B14**
	45	127	1.8	20	**CM070**		**B5/B14**
	36	153	1.3	25	**CM070**		**B5/B14**
	30	174	1.6	30	**CM070**		**B5/B14**
	23	216	1.1	40	**CM070**		**B5/B14**
	15	332	1.0	60		**CMP090/070**	**B5/B14**
	12	392	0.8	75		**CMP090/070**	**B5/B14**
	10	435	1.0	90		**CMP090/070**	**B5/B14**
	8	533	0.7	120		**CMP090/070**	**B5/B14**
	60	98	2.6	15	**CM075**		**B5/B14**
	45	127	2.2	20	**CM075**		**B5/B14**
	36	153	1.6	25	**CM075**		**B5/B14**
	30	174	1.9	30	**CM075**		**B5/B14**
	23	216	1.3	40	**CM075**		**B5/B14**
	18	251	0.9	50	**CM075**		**B5/B14**
	15	332	1.2	60		**CMP090/075**	**B5/B14**
	12	398	0.9	75		**CMP090/075**	**B5/B14**
	10	435	1.1	90		**CMP090/075**	**B5/B14**
	8	543	0.8	120		**CMP090/075**	**B5/B14**
	23	229	2.2	40	**CM090**		**B5/B14**
	18	271	1.6	50	**CM090**		**B5/B14**
	15	310	1.4	60	**CM090**		**B5/B14**
	11	376	1.0	80	**CM090**		**B5/B14**
	15	346	2.1	60		**CMP090/090**	**B5/B14**
	12	415	1.5	75		**CMP090/090**	**B5/B14**
	10	463	1.8	90		**CMP090/090**	**B5/B14**
	8	571	1.3	120		**CMP090/090**	**B5/B14**
	6	667	1.0	150		**CMP090/090**	**B5/B14**
	5	758	0.8	180		**CMP090/090**	**B5/B14**
	18	283	2.8	50	**CM110**		**B5/B14**
	15	325	2.3	60	**CM110**		**B5/B14**
	15	360	3.4	60		**CMP090/110**	**B5/B14**
	12	433	2.7	75		**CMP090/110**	**B5/B14**
	11	401	1.6	80	**CM110**		**B5/B14**
	10	470	3.0	90		**CMP090/110**	**B5/B14**
	9	470	1.3	100	**CM110**		**B5/B14**
	8	599	2.2	120		**CMP090/110**	**B5/B14**
	6	702	1.7	150		**CMP090/110**	**B5/B14**
	5	814	1.3	180		**CMP090/110**	**B5/B14**
	4	973	0.9	240		**CMP090/110**	**B5/B14**
	3	1100	0.7	300		**CMP090/110**	**B5/B14**

Dati tecnici

Technical data

P_1 [kW]	n_2 [min^{-1}]	M_2 [Nm]	sf	i			IEC
0.75							
90S6 (900 min^{-1})	**6**	714	2.1	150		**CMP090/130**	**B5/B14**
	5	800	1.7	180		**CMP090/130**	**B5/B14**
	4	955	1.3	240		**CMP090/130**	**B5/B14**
	3	1123	1.0	300		**CMP090/130**	**B5/B14**
1.1							
80B2 (2800 min^{-1})	**560**	17	3.2	5	**CM050**		**B5/B14**
	373	25	2.3	7.5	**CM050**		**B5/B14**
	280	33	1.8	10	**CM050**		**B5/B14**
	187	48	1.3	15	**CM050**		**B5/B14**
	140	63	0.9	20	**CM050**		**B5/B14**
	187	48	2.4	15	**CM063**		**B5/B14**
	140	63	1.6	20	**CM063**		**B5/B14**
	112	78	1.2	25	**CM063**		**B5/B14**
	93	89	1.4	30	**CM063**		**B5/B14**
	70	114	1.0	40	**CM063**		**B5/B14**
	47	172	0.9	60		**CMP080/063**	**B14**
	37	207	0.7	75		**CMP080/063**	**B14**
	31	232	0.8	90		**CMP080/063**	**B14**
	112	79	1.7	25	**CM070**		**B5/B14**
	70	117	1.4	40	**CM070**		**B5/B14**
	56	141	1.1	50	**CM070**		**B5/B14**
	47	162	0.9	60	**CM070**		**B5/B14**
	47	174	1.3	60		**CMP080/070**	
	37	212	1.0	75		**CMP080/070**	**B14**
	31	238	1.2	90		**CMP080/070**	**B14**
	23	296	0.8	120		**CMP080/070**	**B14**
	93	91	2.4	30	**CM075**		**B5/B14**
	70	117	1.7	40	**CM075**		**B5/B14**
	56	141	1.3	50	**CM075**		**B5/B14**
	47	162	1.1	60	**CM075**		**B5/B14**
	47	174	1.6	60		**CMP080/075**	**B14**
	37	212	1.1	75		**CMP080/075**	**B14**
	31	242	1.4	90		**CMP080/075**	**B14**
	23	300	1.0	120		**CMP080/075**	**B14**
	56	146	2.1	50	**CM090**		**B5/B14**
	47	169	1.6	60	**CM090**		**B5/B14**
	47	181	2.6	60		**CMP080/090**	**B14**
	37	221	1.9	75		**CMP080/090**	**B14**
	35	213	1.2	80	**CM090**		**B5/B14**
	31	251	2.3	90		**CMP080/090**	**B14**
	28	251	0.9	100	**CM090**		**B5/B14**
	23	313	1.6	120		**CMP080/090**	**B14**
	19	375	1.2	150		**CMP080/090**	**B14**
	16	424	1.0	180		**CMP080/090**	**B14**
	35	219	2.0	80	**CM110**		**B5**
	28	263	1.5	100	**CM110**		**B5**
	23	335	2.6	120		**CMP080/110**	**B14**
	19	397	2.0	150		**CMP080/110**	**B14**
	16	450	1.6	180		**CMP080/110**	**B14**
	12	556	1.2	240		**CMP080/110**	**B14**
	9.3	651	0.9	300		**CMP080/110**	**B14**
	19	403	2.5	150		**CMP080/130**	**B14**
	16	463	2.0	180		**CMP080/130**	**B14**
	12	565	1.5	240		**CMP080/130**	**B14**
	9.3	651	1.2	300		**CMP080/130**	**B14**

P_1 [kW]	n_2 [min^{-1}]	M_2 [Nm]	sf	i			IEC
1.1							
80C4 (1400 min^{-1})	**280**	33	2.2	5	**CM050**		**B5/B14**
	187	49	1.6	7.5	**CM050**		**B5/B14**
	140	64	1.3	10	**CM050**		**B5/B14**
	93	92	0.9	15	**CM050**		**B5/B14**
	280	34	4.0	5	**CM063**		**B5/B14**
	187	50	2.9	7.5	**CM063**		**B5/B14**
	140	65	2.3	10	**CM063**		**B5/B14**
	93	95	1.6	15	**CM063**		**B5/B14**
	70	122	1.1	20	**CM063**		**B5/B14**
	56	146	0.9	25	**CM063**		**B5/B14**
	47	169	1.0	30	**CM063**		**B5/B14**
	93	95	2.3	15	**CM070**		**B5/B14**
	70	125	1.6	20	**CM070**		**B5/B14**
	56	150	1.2	25	**CM070**		**B5/B14**
	47	173	1.4	30	**CM070**		**B5/B14**
	35	219	1.0	40	**CM070**		**B5/B14**
	23	326	0.9	60		**CMP080/070**	**B14**
	16	437	0.8	90		**CMP080/070**	**B14**
	70	125	1.9	20	**CM075**		**B5/B14**
	56	150	1.5	25	**CM075**		**B5/B14**
	47	173	1.7	30	**CM075**		**B5/B14**
	35	219	1.1	40	**CM075**		**B5/B14**
	28	259	0.9	50	**CM075**		**B5/B14**
	23	331	1.0	60		**CMP080/075**	**B14**
	19	397	0.8	75		**CMP080/075**	**B14**
	16	443	0.9	90		**CMP080/075**	**B14**
	35	228	1.9	40	**CM090**		**B5/B14**
	28	270	1.4	50	**CM090**		**B5/B14**
	23	311	1.1	60	**CM090**		**B5/B14**
	23	344	1.7	60		**CMP080/090**	**B14**
	19	414	1.2	75		**CMP080/090**	**B14**
	18	384	0.8	80	**CM090**		**B5/B14**
	16	463	1.5	90		**CMP080/090**	**B14**
	12	574	1.1	120		**CMP080/090**	**B14**
	9.3	673	0.8	150		**CMP080/090**	**B14**
	28	285	2.5	50	**CM110**		**B5**
	23	329	1.9	60	**CM110**		**B5**
	23	353	2.7	60		**CMP080/110**	**B14**
	19	430	2.1	75		**CMP080/110**	**B14**
	18	408	1.4	80	**CM110**		**B5**
	16	477	2.4	90		**CMP080/110**	**B14**
	14	480	1.1	100	**CM110**		**B5**
	12	609	1.8	120		**CMP080/110**	**B14**
	9.3	717	1.4	150		**CMP080/110**	**B14**
	7.8	821	1.1	180		**CMP080/110**	**B14**
	6.0	1006	0.8	240		**CMP080/110**	**B14**
	23	324	3.0	60	**CM130**		**B5**
	18	414	2.0	80	**CM130**		**B5**
	16	477	3.1	90		**CMP080/130**	**B14**
	14	480	1.5	100	**CM130**		**B5**
	12	600	2.3	120		**CMP080/130**	**B14**
	9.3	739	1.7	150		**CMP080/130**	**B14**
	7.8	847	1.3	180		**CMP080/130**	**B14**
	5.8	1024	0.9	240		**CMP080/130**	**B14**

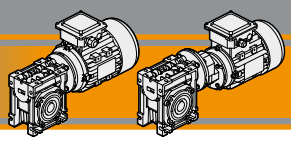

Dati tecnici

Technical data

P_1 [kW]	n_2 [min^{-1}]	M_2 [Nm]	sf	i			IEC
1.1							
90S4 (1400 min^{-1})	**280**	34	4.0	5	**CM063**		**B5/B14**
	187	50	2.9	7.5	**CM063**		**B5/B14**
	140	65	2.3	10	**CM063**		**B5/B14**
	93	95	1.6	15	**CM063**		**B5/B14**
	70	122	1.1	20	**CM063**		**B5/B14**
	56	146	0.9	25	**CM063**		**B5/B14**
	47	169	1.0	30	**CM063**		**B5/B14**
	140	65	3.3	10	**CM070**		**B5/B14**
	93	95	2.3	15	**CM070**		**B5/B14**
	70	125	1.6	20	**CM070**		**B5/B14**
	56	150	1.2	25	**CM070**		**B5/B14**
	47	173	1.4	30	**CM070**		**B5/B14**
	35	219	1.0	40	**CM070**		**B5/B14**
	23	326	0.9	60		**CMP090/070**	**B5/B14**
	19	392	0.7	75		**CMP090/070**	**B5/B14**
	16	437	0.8	90		**CMP090/070**	**B5/B14**
	93	95	2.8	15	**CM075**		**B5/B14**
	70	125	1.9	20	**CM075**		**B5/B14**
	56	150	1.5	25	**CM075**		**B5/B14**
	47	173	1.7	30	**CM075**		**B5/B14**
	35	219	1.1	40	**CM075**		**B5/B14**
	28	259	0.9	50	**CM075**		**B5/B14**
	23	331	1.0	60		**CMP090/075**	**B5/B14**
	19	397	0.8	75		**CMP090/075**	**B5/B14**
	16	443	0.9	90		**CMP090/075**	**B5/B14**
	56	156	2.4	25	**CM090**		**B5/B14**
	47	178	2.7	30	**CM090**		**B5/B14**
	35	228	1.9	40	**CM090**		**B5/B14**
	28	270	1.4	50	**CM090**		**B5/B14**
	23	311	1.1	60	**CM090**		**B5/B14**
	23	344	1.7	60		**CMP090/090**	**B5/B14**
	19	414	1.2	75		**CMP090/090**	**B5/B14**
	18	384	0.8	80	**CM090**		**B5/B14**
	16	463	1.5	90		**CMP090/090**	**B5/B14**
	12	574	1.1	120		**CMP090/090**	**B5/B14**
	9	673	0.8	150		**CMP090/090**	**B5/B14**
	35	237	3.2	40	**CM110**		**B5/B14**
	28	285	2.5	50	**CM110**		**B5/B14**
	23	329	1.9	60	**CM110**		**B5/B14**
	23	353	2.7	60		**CMP090/110**	**B5/B14**
	19	430	2.1	75		**CMP090/110**	**B5/B14**
	18	408	1.4	80	**CM110**		**B5/B14**
	16	477	2.4	90		**CMP090/110**	**B5/B14**
	14	480	1.1	100	**CM110**		**B5/B14**
	12	609	1.8	120		**CMP090/110**	**B5/B14**
	9	717	1.4	150		**CMP090/110**	**B5/B14**
	8	821	1.1	180		**CMP090/110**	**B5/B14**
	6	1006	0.8	240		**CMP090/110**	**B5/B14**
	18	414	2.0	80	**CM130**		**B5**
	14	480	1.5	100	**CM130**		**B5**
	12	600	2.1	120		**CMP090/130**	**B5/B14**
	9	739	1.7	150		**CMP090/130**	**B5/B14**
	8	847	1.3	180		**CMP090/130**	**B5/B14**
	6	1024	1.0	240		**CMP090/130**	**B5/B14**
	5	1169	0.7	300		**CMP090/130**	**B5/B14**

P_1 [kW]	n_2 [min^{-1}]	M_2 [Nm]	sf	i			IEC
1.1							
90L6 (900 min^{-1})	**180**	52	3.1	5	**CM063**		**B5/B14**
	120	75	2.2	7.5	**CM063**		**B5/B14**
	90	98	1.8	10	**CM063**		**B5/B14**
	60	142	1.3	15	**CM063**		**B5/B14**
	45	182	0.8	20	**CM063**		**B5/B14**
	120	76	3.1	7.5	**CM070**		**B5/B14**
	90	99	2.5	10	**CM070**		**B5/B14**
	60	145	1.8	15	**CM070**		**B5/B14**
	45	187	1.2	20	**CM070**		**B5/B14**
	36	225	0.9	25	**CM070**		**B5/B14**
	30	256	1.1	30	**CM070**		**B5/B14**
	23	239	0.8	40	**CM070**		**B5/B14**
	15	487	0.7	60		**CMP090/070**	**B5/B14**
	10	638	0.7	90		**CMP090/070**	**B5/B14**
	60	145	2.2	15	**CM075**		**B5/B14**
	45	187	1.5	20	**CM075**		**B5/B14**
	36	225	1.1	25	**CM075**		**B5/B14**
	30	256	1.3	30	**CM075**		**B5/B14**
	23	317	0.9	40	**CM075**		**B5/B14**
	15	487	0.8	60		**CMP090/075**	**B5/B14**
	12	583	0.7	75		**CMP090/075**	**B5/B14**
	10	638	0.8	90		**CMP090/075**	**B5/B14**
	45	191	2.5	20	**CM090**		**B5/B14**
	36	233	1.8	25	**CM090**		**B5/B14**
	30	266	2.1	30	**CM090**		**B5/B14**
	23	336	1.5	40	**CM090**		**B5/B14**
	18	397	1.1	50	**CM090**		**B5/B14**
	15	455	0.9	60	**CM090**		**B5/B14**
	15	508	1.4	60		**CMP090/090**	**B5/B14**
	12	609	1.0	75		**CMP090/090**	**B5/B14**
	10	679	1.3	90		**CMP090/090**	**B5/B14**
	8	837	0.9	120		**CMP090/090**	**B5/B14**
	18	414	1.9	50	**CM110**		**B5/B14**
	15	476	1.5	60	**CM110**		**B5/B14**
	15	528	2.3	60		**CMP090/110**	**B5/B14**
	12	635	1.8	75		**CMP090/110**	**B5/B14**
	11	588	1.1	80	**CM110**		**B5/B14**
	10	690	2.0	90		**CMP090/110**	**B5/B14**
	9	689	0.9	100	**CM110**		**B5/B14**
	8	878	1.5	120		**CMP090/110**	**B5/B14**
	6	1029	1.1	150		**CMP090/110**	**B5/B14**
	5	1194	0.9	180		**CMP090/110**	**B5/B14**
	15	490	2.0	60	**CM130**		**B5**
	11	598	1.5	80	**CM130**		**B5**
	9	689	1.1	100	**CM130**		**B5**
	8	865	1.9	120		**CMP090/130**	**B5/B14**
	6	1047	1.4	150		**CMP090/130**	**B5/B14**
	5	1174	1.2	180		**CMP090/130**	**B5/B14**
	4	1400	0.9	240		**CMP090/130**	**B5/B14**

Dati tecnici

Technical data

P_1 [kW]	n_2 [min^{-1}]	M_2 [Nm]	sf	i			IEC
1.5							
90S2 (2800 min^{-1})	**560**	23	4.2	5	**CM063**		**B5/B14**
	373	35	3.0	7.5	**CM063**		**B5/B14**
	280	45	2.4	10	**CM063**		**B5/B14**
	187	66	1.7	15	**CM063**		**B5/B14**
	140	86	1.2	20	**CM063**		**B5/B14**
	112	106	0.9	25	**CM063**		**B5/B14**
	93	121	1.0	30	**CM063**		**B5/B14**
	187	67	2.5	15	**CM070**		**B5/B14**
	140	87	1.8	20	**CM070**		**B5/B14**
	112	107	1.3	25	**CM070**		**B5/B14**
	93	124	1.5	30	**CM070**		**B5/B14**
	70	160	1.1	40	**CM070**		**B5/B14**
	56	189	0.8	50	**CM070**		**B5/B14**
	47	238	1.0	60		**CMP090/070**	**B5/B14**
	37	290	0.7	75		**CMP090/070**	**B5/B14**
	31	325	0.8	90		**CMP090/070**	**B5/B14**
	140	87	2.1	20	**CM075**		**B5/B14**
	112	107	1.5	25	**CM075**		**B5/B14**
	93	124	1.8	30	**CM075**		**B5/B14**
	70	160	1.2	40	**CM075**		**B5/B14**
	56	192	0.9	50	**CM075**		**B5/B14**
	47	238	1.2	60		**CMP090/075**	**B5/B14**
	37	290	0.8	75		**CMP090/075**	**B5/B14**
	31	329	1.0	90		**CMP090/075**	**B5/B14**
	70	164	2.1	40	**CM090**		**B5/B14**
	56	200	1.5	50	**CM090**		**B5/B14**
	47	230	1.2	60	**CM090**		**B5/B14**
	47	247	1.9	60		**CMP090/090**	**B5/B14**
	37	301	1.4	75		**CMP090/090**	**B5/B14**
	35	287	0.9	80	**CM090**		**B5/B14**
	31	343	1.7	90		**CMP090/090**	**B5/B14**
	23	427	1.2	120		**CMP090/090**	**B5/B14**
	19	511	0.9	150		**CMP090/090**	**B5/B14**
	56	202	2.7	50	**CM110**		**B5/B14**
	47	236	2.1	60	**CM110**		**B5/B14**
	37	308	2.5	75		**CMP090/110**	**B5/B14**
	35	299	1.4	80	**CM110**		**B5/B14**
	31	347	2.8	90		**CMP090/110**	**B5/B14**
	28	358	1.1	100	**CM110**		**B5/B14**
	23	457	1.9	120		**CMP090/110**	**B5/B14**
	19	541	1.5	150		**CMP090/110**	**B5/B14**
	16	614	1.2	180		**CMP090/110**	**B5/B14**
	12	758	0.9	240		**CMP090/110**	**B5/B14**
	47	236	2.7	60	**CM130**		**B5**
	35	295	2.0	80	**CM130**		**B5**
	28	358	1.5	100	**CM130**		**B5**
	23	445	2.5	120		**CMP090/130**	**B5/B14**
	19	549	1.9	150		**CMP090/130**	**B5/B14**
	16	632	1.5	180		**CMP090/130**	**B5/B14**
	12	770	1.1	240		**CMP090/130**	**B5/B14**
	9	887	0.9	300		**CMP090/130**	**B5/B14**
90L4 (1400 min^{-1})	**280**	46	2.9	5	**CM063**		**B5/B14**
	187	68	2.1	7.5	**CM063**		**B5/B14**
	140	88	1.7	10	**CM063**		**B5/B14**
	93	129	1.2	15	**CM063**		**B5/B14**
	70	166	0.8	20	**CM063**		**B5/B14**

P_1 [kW]	n_2 [min^{-1}]	M_2 [Nm]	sf	i			IEC
1.5							
90L4 (1400 min^{-1})	**140**	89	2.4	10	**CM070**		**B5/B14**
	93	129	1.7	15	**CM070**		**B5/B14**
	70	170	1.2	20	**CM070**		**B5/B14**
	56	205	0.9	25	**CM070**		**B5/B14**
	47	236	1.0	30	**CM070**		**B5/B14**
	93	129	2.1	15	**CM075**		**B5/B14**
	70	170	1.4	20	**CM075**		**B5/B14**
	56	205	1.1	25	**CM075**		**B5/B14**
	47	236	1.2	30	**CM075**		**B5/B14**
	35	299	0.8	40	**CM075**		**B5/B14**
	70	172	2.4	20	**CM090**		**B5/B14**
	56	212	1.7	25	**CM090**		**B5/B14**
	47	243	2.0	30	**CM090**		**B5/B14**
	35	311	1.4	40	**CM090**		**B5/B14**
	28	368	1.0	50	**CM090**		**B5/B14**
	23	424	0.8	60	**CM090**		**B5/B14**
	23	469	1.2	60		**CMP090/090**	**B5/B14**
	19	564	0.9	75		**CMP090/090**	**B5/B14**
	16	632	1.1	90		**CMP090/090**	**B5/B14**
	12	782	0.8	120		**CMP090/090**	**B5/B14**
	35	323	2.4	40	**CM110**		**B5/B14**
	28	389	1.8	50	**CM110**		**B5/B14**
	23	448	1.4	60	**CM110**		**B5/B14**
	23	481	2.0	60		**CMP090/110**	**B5/B14**
	19	587	1.5	75		**CMP090/110**	**B5/B14**
	18	557	1.0	80	**CM110**		**B5/B14**
	14	655	0.8	100	**CM110**		**B5/B14**
	16	650	1.8	90		**CMP090/110**	**B5/B14**
	12	830	1.3	120		**CMP090/110**	**B5/B14**
	9	978	1.0	150		**CMP090/110**	**B5/B14**
	8	1119	0.8	180		**CMP090/110**	**B5/B14**
	28	389	2.5	50	**CM130**		**B5**
	23	448	2.0	60	**CM130**		**B5**
	19	579	2.1	75		**CMP090/130**	**B5/B14**
	18	565	1.5	80	**CM130**		**B5**
	16	650	2.2	90		**CMP090/130**	**B5/B14**
	14	655	1.1	100	**CM130**		**B5**
	12	818	1.5	120		**CMP090/130**	**B5/B14**
	9	1008	1.2	150		**CMP090/130**	**B5/B14**
	8	1155	0.9	180		**CMP090/130**	**B5/B14**
	6	1396	0.7	240		**CMP090/130**	**B5/B14**
100LA6 (900 min^{-1})	**120**	104	2.3	7.5	**CM070**		**B5/B14**
	90	135	1.9	10	**CM070**		**B5/B14**
	60	198	1.3	15	**CM070**		**B5/B14**
	45	251	0.9	20	**CM070**		**B5/B14**
	120	104	2.7	7.5	**CM075**		**B5/B14**
	90	135	2.2	10	**CM075**		**B5/B14**
	60	198	1.6	15	**CM075**		**B5/B14**
	45	251	1.2	20	**CM075**		**B5/B14**
	36	306	0.8	25	**CM075**		**B5/B14**
	30	349	0.9	30	**CM075**		**B5/B14**

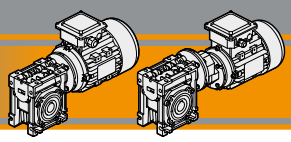

Dati tecnici

Technical data

P_1 [kW]	n_2 [min^{-1}]	M_2 [Nm]	sf	i			IEC
1.5							
100LA6 (900 min^{-1})	**60**	201	2.6	15	**CM090**		**B5/B14**
	45	261	1.8	20	**CM090**		**B5/B14**
	36	318	1.3	25	**CM090**		**B5/B14**
	30	363	1.6	30	**CM090**		**B5/B14**
	23	452	1.1	40	**CM090**		**B5/B14**
	45	267	3.1	20	**CM110**		**B5/B14**
	36	326	2.4	25	**CM110**		**B5/B14**
	30	372	2.6	30	**CM110**		**B5/B14**
	23	478	1.8	40	**CM110**		**B5/B14**
	18	565	1.4	50	**CM110**		**B5/B14**
	15	649	1.1	60	**CM110**		**B5/B14**
	23	471	2.3	40	**CM130**		**B5**
	18	581	1.8	50	**CM130**		**B5**
	15	669	1.5	60	**CM130**		**B5**
	11	815	1.1	80	**CM130**		**B5**
	9	939	0.8	100	**CM130**		**B5**
2.2							
90L2 (2800 min^{-1})	**373**	51	2.0	7.5	**CM063**		**B5/B14**
	280	66	1.7	10	**CM063**		**B5/B14**
	187	97	1.2	15	**CM063**		**B5/B14**
	140	126	0.8	20	**CM063**		**B5/B14**
	187	98	1.7	15	**CM070**		**B5/B14**
	140	128	1.2	20	**CM070**		**B5/B14**
	112	158	0.9	25	**CM070**		**B5/B14**
	93	182	1.0	30	**CM070**		**B5/B14**
	187	98	2.0	15	**CM075**		**B5/B14**
	140	128	1.4	20	**CM075**		**B5/B14**
	112	158	1.0	25	**CM075**		**B5/B14**
	93	182	1.2	30	**CM075**		**B5/B14**
	70	234	0.8	40	**CM075**		**B5/B14**
	140	129	2.4	20	**CM090**		**B5/B14**
	112	159	1.8	25	**CM090**		**B5/B14**
	93	187	2.1	30	**CM090**		**B5/B14**
	70	240	1.4	40	**CM090**		**B5/B14**
	56	293	1.0	50	**CM090**		**B5/B14**
	47	338	0.8	60	**CM090**		**B5/B14**
	47	362	1.3	60		**CMP090/090**	**B5/B14**
	37	441	1.0	75		**CMP090/090**	**B5/B14**
	31	503	1.1	90		**CMP090/090**	**B5/B14**
	23	627	0.8	120		**CMP090/090**	**B5/B14**
	70	243	2.4	40	**CM110**		**B5/B14**
	56	296	1.8	50	**CM110**		**B5/B14**
	47	347	1.4	60	**CM110**		**B5/B14**
	47	371	2.2	60		**CMP090/110**	**B5/B14**
	37	452	1.7	75		**CMP090/110**	**B5/B14**
	35	438	1.0	80	**CM110**		**B5/B14**
	31	510	1.9	90		**CMP090/110**	**B5/B14**
	23	671	1.3	120		**CMP090/110**	**B5/B14**
	19	794	1.0	150		**CMP090/110**	**B5/B14**
	16	900	0.8	180		**CMP090/110**	**B5/B14**

P_1 [kW]	n_2 [min^{-1}]	M_2 [Nm]	sf	i			IEC
2.2							
90L2 (2800 min^{-1})	**47**	347	1.8	60	**CM130**		**B5**
	35	432	1.3	80	**CM130**		**B5**
	28	525	1.0	100	**CM130**		**B5**
	23	653	1.7	120		**CMP090/130**	**B5/B14**
	19	805	1.3	150		**CMP090/130**	**B5/B14**
	16	927	1.0	180		**CMP090/130**	**B5/B14**
	12	1129	0.8	240		**CMP090/130**	**B5/B14**
100LA4 (1400 min^{-1})	**187**	100	2.0	7.5	**CM070**		**B5/B14**
	140	131	1.7	10	**CM070**		**B5/B14**
	93	189	1.2	15	**CM070**		**B5/B14**
	70	249	0.8	20	**CM070**		**B5/B14**
	187	100	2.4	7.5	**CM075**		**B5/B14**
	140	131	2.0	10	**CM075**		**B5/B14**
	93	189	1.4	15	**CM075**		**B5/B14**
	70	249	1.0	20	**CM075**		**B5/B14**
	56	300	0.8	25	**CM075**		**B5/B14**
	47	347	1.0	30	**CM075**		**B5/B14**
	140	132	2.8	10	**CM090**		**B5/B14**
	93	194	2.2	15	**CM090**		**B5/B14**
	70	252	1.6	20	**CM090**		**B5/B14**
	56	311	1.2	25	**CM090**		**B5/B14**
	47	356	1.4	30	**CM090**		**B5/B14**
	35	456	1.0	40	**CM090**		**B5/B14**
	70	255	2.9	20	**CM110**		**B5/B14**
	56	315	2.1	25	**CM110**		**B5/B14**
	47	360	2.2	30	**CM110**		**B5/B14**
	35	474	1.6	40	**CM110**		**B5/B14**
	28	570	1.2	50	**CM110**		**B5/B14**
	23	657	1.0	60	**CM110**		**B5/B14**
	35	456	2.3	40	**CM130**		**B5**
	28	563	1.7	50	**CM130**		**B5**
	23	657	1.4	60	**CM130**		**B5**
	18	828	1.0	80	**CM130**		**B5**
	14	960	0.8	100	**CM130**		**B5**
112M6 (900 min^{-1})	**120**	154	2.7	7.5	**CM090**		**B5/B14**
	90	203	2.2	10	**CM090**		**B5/B14**
	60	294	1.7	15	**CM090**		**B5/B14**
	45	383	1.2	20	**CM090**		**B5/B14**
	36	467	0.9	25	**CM090**		**B5/B14**
	30	532	1.1	30	**CM090**		**B5/B14**
	23	663	0.8	40	**CM090**		**B5/B14**
	45	388	2.1	20	**CM110**		**B5/B14**
	36	479	1.6	25	**CM110**		**B5/B14**
	30	546	1.8	30	**CM110**		**B5/B14**
	23	700	1.3	40	**CM110**		**B5/B14**
	18	829	1.0	50	**CM110**		**B5/B14**
	23	691	1.6	40	**CM130**		**B5**
	18	852	1.2	50	**CM130**		**B5**
	15	980	1.0	60	**CM130**		**B5**

Dati tecnici

Technical data

P_1 [kW]	n_2 [min^{-1}]	M_2 [Nm]	sf	i			IEC
3.0							
100LA2 (2800 min^{-1})	**280**	91	1.7	10	**CM070**		**B5/B14**
	187	134	1.2	15	**CM070**		**B5/B14**
	140	174	0.9	20	**CM070**		**B5/B14**
	93	246	0.8	30	**CM070**		**B5/B14**
	373	69	2.5	7.5	**CM075**		**B5/B14**
	280	91	2.1	10	**CM075**		**B5/B14**
	187	134	1.5	15	**CM075**		**B5/B14**
	140	174	1.1	20	**CM075**		**B5/B14**
	112	215	0.8	25	**CM075**		**B5/B14**
	93	249	0.9	30	**CM075**		**B5/B14**
	187	135	2.4	15	**CM090**		**B5/B14**
	140	176	1.8	20	**CM090**		**B5/B14**
	112	217	1.3	25	**CM090**		**B5/B14**
	93	255	1.5	30	**CM090**		**B5/B14**
	70	327	1.0	40	**CM090**		**B5/B14**
	112	220	2.3	25	**CM110**		**B5/B14**
	93	252	2.5	30	**CM110**		**B5/B14**
	70	332	1.8	40	**CM110**		**B5/B14**
	56	404	1.3	50	**CM110**		**B5/B14**
	47	473	1.0	60	**CM110**		**B5/B14**
	56	404	1.7	50	**CM130**		**B5**
	47	473	1.3	60	**CM130**		**B5**
	35	589	0.9	80	**CM130**		**B5**
100LB4 (1400 min^{-1})	**187**	137	1.5	7.5	**CM070**		**B5/B14**
	140	178	1.2	10	**CM070**		**B5/B14**
	93	258	0.9	15	**CM070**		**B5/B14**
	187	137	1.7	7.5	**CM075**		**B5/B14**
	140	178	1.4	10	**CM075**		**B5/B14**
	93	258	1.0	15	**CM075**		**B5/B14**
	187	138	2.5	7.5	**CM090**		**B5/B14**
	140	180	2.1	10	**CM090**		**B5/B14**
	93	264	1.6	15	**CM090**		**B5/B14**
	70	344	1.2	20	**CM090**		**B5/B14**
	56	425	0.9	25	**CM090**		**B5/B14**
	47	485	1.0	30	**CM090**		**B5/B14**
	35	622	0.8	40	**CM090**		**B5/B14**
	93	264	2.7	15	**CM110**		**B5/B14**
	70	348	2.1	20	**CM110**		**B5/B14**
	56	430	1.6	25	**CM110**		**B5/B14**
	47	491	1.6	30	**CM110**		**B5/B14**
	35	647	1.2	40	**CM110**		**B5/B14**
	28	778	0.9	50	**CM110**		**B5/B14**
	47	485	2.2	30	**CM130**		**B5**
	35	622	1.7	40	**CM130**		**B5**
	28	767	1.3	50	**CM130**		**B5**
	23	896	1.0	60	**CM130**		**B5**

P_1 [kW]	n_2 [min^{-1}]	M_2 [Nm]	sf	i			IEC
3.0							
132S6 (900 min^{-1})	**120**	210	3.5	7.5	**CM110**		**B5/B14**
	90	277	2.9	10	**CM110**		**B5/B14**
	60	401	2.2	15	**CM110**		**B5/B14**
	45	528	1.5	20	**CM110**		**B5/B14**
	36	653	1.2	25	**CM110**		**B5/B14**
	30	735	1.3	30	**CM110**		**B5/B14**
	45	522	2.0	20	**CM130**		
	36	645	1.6	25	**CM130**		**B5/B14**
	30	735	1.6	30	**CM130**		**B5/B14**
	23	942	1.2	40	**CM130**		**B5/B14**
4.0							
112M2 (2800 min^{-1})	**373**	92	1.5	7.5	**CM070**		**B5/B14**
	280	121	1.3	10	**CM070**		**B5/B14**
	187	178	0.9	15	**CM070**		**B5/B14**
	373	92	1.9	7.5	**CM075**		**B5/B14**
	280	121	1.5	10	**CM075**		**B5/B14**
	187	178	1.1	15	**CM075**		**B5/B14**
	140	232	0.8	20	**CM075**		**B5/B14**
	280	123	2.3	10	**CM090**		**B5/B14**
	187	180	1.8	15	**CM090**		**B5/B14**
	140	235	1.3	20	**CM090**		**B5/B14**
	93	336	1.1	30	**CM090**		**B5/B14**
	70	437	0.8	40	**CM090**		**B5/B14**
	140	237	2.3	20	**CM110**		**B5/B14**
	112	293	1.7	25	**CM110**		**B5/B14**
	93	336	1.9	30	**CM110**		**B5/B14**
	70	442	1.3	40	**CM110**		**B5/B14**
	56	539	1.0	50	**CM110**		**B5/B14**
112M4 (1400 min^{-1})	**187**	182	1.1	7.5	**CM070**		**B5/B14**
	140	237	0.9	10	**CM070**		**B5/B14**
	187	182	1.3	7.5	**CM075**		**B5/B14**
	140	237	1.1	10	**CM075**		**B5/B14**
	93	344	0.8	15	**CM075**		**B5/B14**
	187	184	1.9	7.5	**CM090**		**B5/B14**
	140	240	1.6	10	**CM090**		**B5/B14**
	93	352	1.2	15	**CM090**		**B5/B14**
	70	458	0.9	20	**CM090**		**B5/B14**
	47	655	0.8	30	**CM090**		**B5/B14**
	140	240	2.8	10	**CM110**		**B5/B14**
	93	352	2.1	15	**CM110**		**B5/B14**
	70	464	1.6	20	**CM110**		**B5/B14**
	56	573	1.2	25	**CM110**		**B5/B14**
	47	655	1.2	30	**CM110**		**B5/B14**
	35	862	0.9	40	**CM110**		**B5/B14**
	70	458	2.0	20	**CM130**		**B5**
	56	566	1.6	25	**CM130**		**B5**
	47	647	1.6	30	**CM130**		**B5**
	35	829	1.3	40	**CM130**		**B5**
	28	1023	0.9	50	**CM130**		**B5**

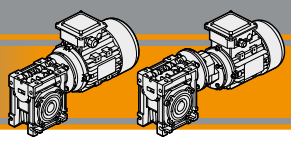

Dati tecnici

Technical data

P_1 [kW]	n_2 [min^{-1}]	M_2 [Nm]	sf	i			IEC
4.0							
132L6 (900 min^{-1})	**120**	280	2.6	7.5	**CM110**		**B5/B14**
	90	369	2.2	10	**CM110**		**B5/B14**
	60	535	1.6	15	**CM110**		**B5/B14**
	45	705	1.1	20	**CM110**		**B5/B14**
	36	870	0.9	25	**CM110**		**B5/B14**
	30	980	1.0	30	**CM110**		**B5/B14**
	45	696	1.5	20	**CM130**		**B5/B14**
	36	860	1.2	25	**CM130**		**B5/B14**
	30	980	1.2	30	**CM130**		**B5/B14**
5.5							
132SA2 (2800 min^{-1})	**373**	127	3.5	7.5	**CM110**		**B5/B14**
	280	167	2.9	10	**CM110**		**B5/B14**
	187	248	2.2	15	**CM110**		**B5/B14**
	140	326	1.6	20	**CM110**		**B5/B14**
	112	403	1.3	25	**CM110**		**B5/B14**
	93	461	1.4	30	**CM110**		**B5/B14**
	140	326	2.1	20	**CM130**		**B5/B14**
	112	403	1.6	25	**CM130**		**B5/B14**
	93	461	1.7	30	**CM130**		**B5/B14**
	70	600	1.3	40	**CM130**		**B5/B14**
132S4 (1400 min^{-1})	**187**	250	2.4	7.5	**CM110**		**B5/B14**
	140	330	2.0	10	**CM110**		**B5/B14**
	93	484	1.5	15	**CM110**		**B5/B14**
	70	638	1.2	20	**CM110**		**B5/B14**
	56	788	0.9	25	**CM110**		**B5/B14**
	47	912	0.9	30	**CM110**		**B5/B14**
	187	250	3.0	7.5	**CM130**		**B5/B14**
	140	330	2.5	10	**CM130**		**B5/B14**
	93	484	1.9	15	**CM130**		**B5/B14**
	70	630	1.4	20	**CM130**		**B5/B14**
	56	778	1.2	25	**CM130**		**B5/B14**
	47	889	1.2	30	**CM130**		**B5/B14**
	35	1141	0.9	40	**CM130**		**B5/B14**

P_1 [kW]	n_2 [min^{-1}]	M_2 [Nm]	sf	i			IEC
7.5							
132SB2 (2800 min^{-1})	**373**	173	2.5	7.5	**CM110**		**B5/B14**
	280	228	2.2	10	**CM110**		**B5/B14**
	187	338	1.6	15	**CM110**		**B5/B14**
	140	445	1.2	20	**CM110**		**B5/B14**
	112	550	0.9	25	**CM110**		**B5/B14**
	93	629	1.0	30	**CM110**		**B5/B14**
	187	338	2.1	15	**CM130**		**B5/B14**
	140	445	1.5	20	**CM130**		**B5/B14**
	112	550	1.2	25	**CM130**		**B5/B14**
	93	629	1.3	30	**CM130**		**B5/B14**
	70	819	0.9	40	**CM130**		**B5/B14**
132MA4 (1400 min^{-1})	**187**	341	1.8	7.5	**CM110**		**B5/B14**
	140	450	1.5	10	**CM110**		**B5/B14**
	93	660	1.1	15	**CM110**		**B5/B14**
	70	870	0.9	20	**CM110**		**B5/B14**
	187	341	2.2	7.5	**CM130**		**B5/B14**
	140	450	1.8	10	**CM130**		**B5/B14**
	93	660	1.4	15	**CM130**		**B5/B14**
	70	860	1.1	20	**CM130**		**B5/B14**
	56	1062	0.9	25	**CM130**		**B5/B14**
	47	1213	0.9	30	**CM130**		**B5/B14**

Motori applicabili

IEC Motor adapters

	IEC	N	M	P	D	i											
						5	7.5	10	15	20	25	30	40	50	60	80	100
CM026	**56B14**	50	65	80	9												
CM030	**63B5**	95	115	140	11												
	63B14	60	75	90													
	56B5	80	100	120	9	**B**	**B**	**B**	**B**	**B**	**B**	**B**	**B**	**B**			
	56B14	50	65	80													
CM040	**71B5**	110	130	160	14												
	71B14	70	85	105													
	63B5	95	115	140	11	**B**	**B**	**B**	**B**	**B**	**B**	**B**	**B**				
	63B14	60	75	90													
	56B5	80	100	120	9	**BS**	**BS**	**BS**	**BS**	**BS**	**BS**	**BS**	**BS**	**B**	**B**	**B**	**B**
	56B14	50	65	80													
CM050	**80B5**	130	165	200	19												
	80B14	80	100	120													
	71B5	110	130	160	14	**B**	**B**	**B**	**B**	**B**	**B**	**B**					
	71B14	70	85	105													
	63B5	95	115	140	11	**BS**	**BS**	**BS**	**BS**	**BS**	**BS**	**BS**	**B**	**B**	**B**	**B**	
	63B14	60	75	90													
CM063	**90B5**	130	165	200	24												
	90B14	95	115	140													
	80B5	130	165	200	19	**B**	**B**	**B**	**B**	**B**	**B**	**B**					
	80B14	80	100	120													
	71B5	110	130	160	14	**BS**	**BS**	**BS**	**BS**	**BS**	**BS**	**BS**	**B**	**B**	**B**		
	71B14	70	85	105													
	63B5	95	115	140	11								**BS**	**BS**	**BS**	**B**	**B**
CM070	**100/112B5**	180	215	250	28												
	100/112B14	110	130	160													
	90B5	130	165	200	24		**B**	**B**	**B**	**B**							
	90B14	95	115	140													
	80B5	130	165	200	19		**BS**	**BS**	**BS**	**BS**	**B**	**B**	**B**				
	80B14	80	100	120													
	71B5	110	130	160	14						**BS**	**BS**	**BS**	**B**	**B**	**B**	**B**
CM075	**100/112B5**	180	215	250	28												
	100/112B14	110	130	160													
	90B5	130	165	200	24		**B**	**B**	**B**	**B**	**B**	**B**					
	90B14	95	115	140													
	80B5	130	165	200	19		**BS**	**BS**	**BS**	**BS**	**BS**	**BS**	**B**	**B**			
	80B14	80	100	120													
	71B5	110	130	160	14								**BS**	**BS**	**B**	**B**	**B**

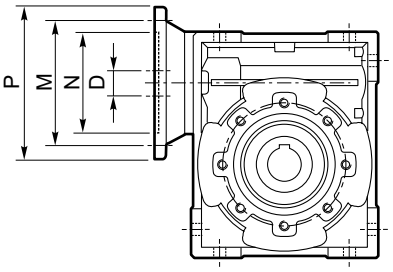

N.B.

Le aree evidenziate in grigio indicano l'applicabilità della corrispondente grandezza motore.

N.B. Grey areas indicate motor inputs available on each size of unit.

B/BS = Boccola di riduzione in acciaio

B/BS = Metal shaft sleeve

Nota: flange Nema disponibili a richiesta
Note: *Nema flange available on demand*

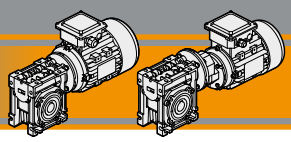

Motori applicabili

IEC Motor adapters

	IEC	N	M	P	D	i											
						5	7.5	10	15	20	25	30	40	50	60	80	100
CM090	**100/112B5**	180	215	250	28												
	100/112B14	110	130	160													
	90B5	130	165	200	24		**B**	**B**	**B**	**B**	**B**	**B**	**B**				
	90B14	95	115	140													
	80B5	130	165	200	19		**BS**	**BS**	**BS**	**BS**	**BS**	**BS**	**BS**	**B**	**B**	**B**	
	80B14	80	100	120													
	71B5	110	130	160	14									**BS**	**BS**	**BS**	**B**
CM110	**132B5**	230	265	300	38												
	132B14	130	165	200													
	100/112B5	180	215	250	28		**B**	**B**	**B**	**B**	**B**	**B**					
	100/112B14	110	130	160													
	90B5	130	165	200	24		**BS**	**BS**	**BS**	**BS**	**BS**	**BS**	**B**	**B**	**B**		
	90B14	95	115	140													
	80B5	130	165	200	19								**BS**	**BS**	**BS**	**B**	**B**
CM130	**132B5**	230	265	300	38												
	132B14	130	165	200													
	100/112B5	180	215	250	28		**B**	**B**	**B**	**B**	**B**	**B**	**B**				
	90B5	130	165	200	24		**BS**	**BS**	**BS**	**BS**	**BS**	**BS**	**BS**	**B**	**B**	**B**	**B**
	80B5	130	165	200	19									**BS**	**BS**	**BS**	**BS**

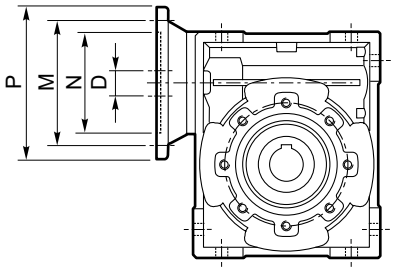

N.B.
Le aree evidenziate in grigio indicano l'applicabilità della corrispondente grandezza motore.
N.B. Grey areas indicate motor inputs available on each size of unit.

B/BS = Boccola di riduzione in acciaio
B/BS = Metal shaft sleeve

Nota: flange Nema disponibili a richiesta
Note: *Nema flange available on demand*

CMP	IEC	N	M	P	D	i (i_1 x i_2)							
						60 (3x20)	**75** (3x25)	**90** (3x30)	**120** (3x40)	**150** (3x50)	**180** (3x60)	**240** (3x80)	**300** (3x100)
056/030	56 B14	50	65	80	9								
056/040						**B**	**B**	**B**	**B**				
063/040	63 B14	60	75	90	11								
063/050						**B**	**B**	**B**					
063/063						**BS**	**BS**	**BS**	**B**	**B**	**B**		
071/050	71 B14	70	85	105	14								
071/063						**B**	**B**	**B**					
071/070						**B**	**B**	**B**	**B**				
071/075						**B**	**B**	**B**	**B**				
071/090						**BS**	**BS**	**BS**	**B**	**B**	**B**		
080/063	80 B14	80	100	120	19								
080/070													
080/075													
080/090						**B**	**B**	**B**					
080/110						**BS**	**BS**	**B**	**B**	**B**	**B**		
080/130						**BS**	**BS**	**BS**	**BS**	**B**	**B**	**B**	**B**
090/070	90 B14 90 B5	95 130	115 165	140 200	24								
090/075													
090/090						**B**	**B**	**B**					
090/110						**BS**	**BS**	**B**	**B**	**B**	**B**		
090/130						**BS**	**BS**	**BS**	**BS**	**B**	**B**	**B**	**B**

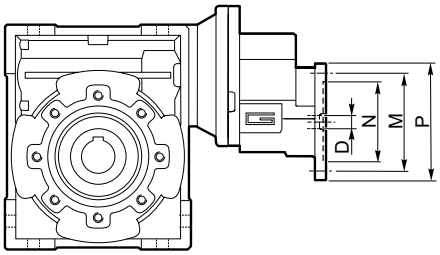

N.B.
Le aree evidenziate in grigio indicano l'applicabilità della corrispondente grandezza motore.
N.B. Grey areas indicate motor inputs available on each size of unit.

B/BS = Boccola di riduzione in acciaio
B/BS = Metal shaft sleeve

Dimensioni ***Dimensions***

CM 026 U

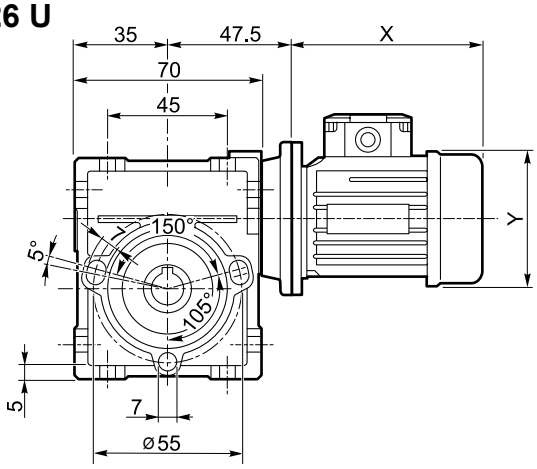

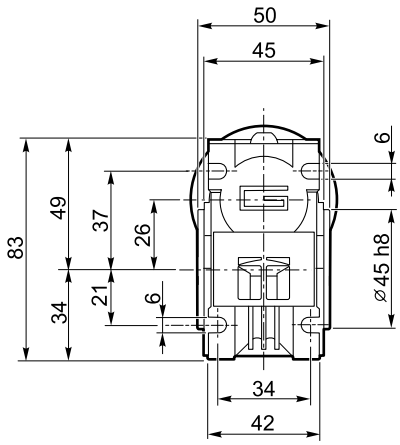

CM 026 F

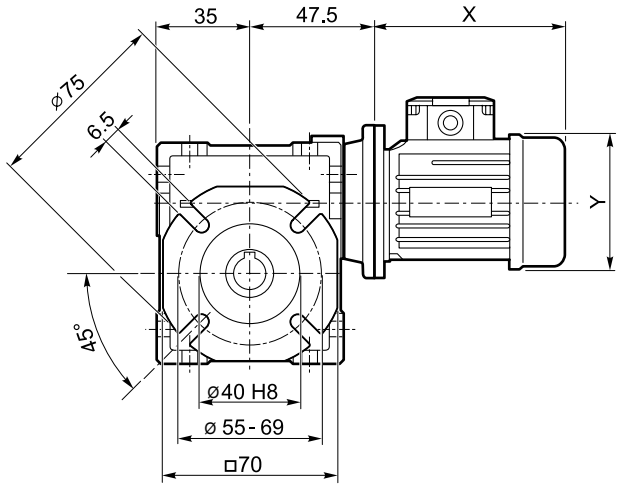

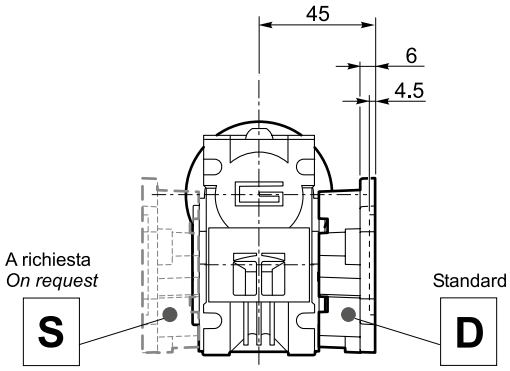

Kg
0.8

CMIS 026 ..

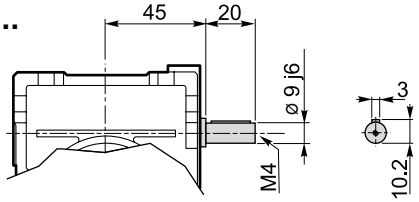

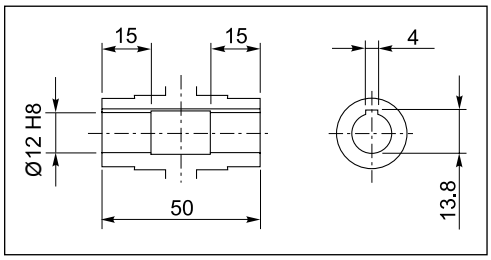

Albero lento cavo / *Hollow output shaft*

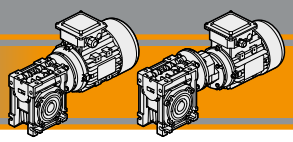

Dimensioni ***Dimensions***

CM 030 U

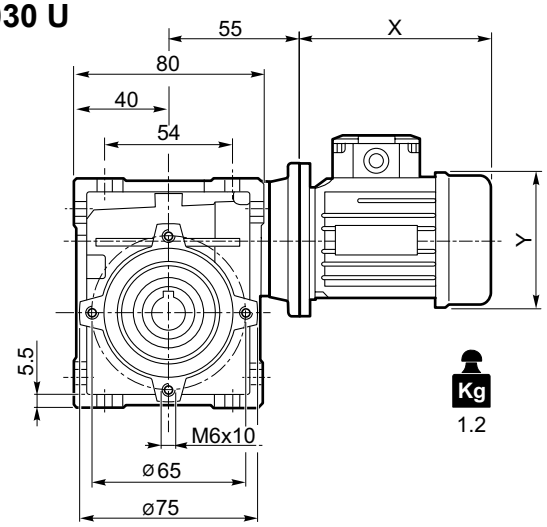

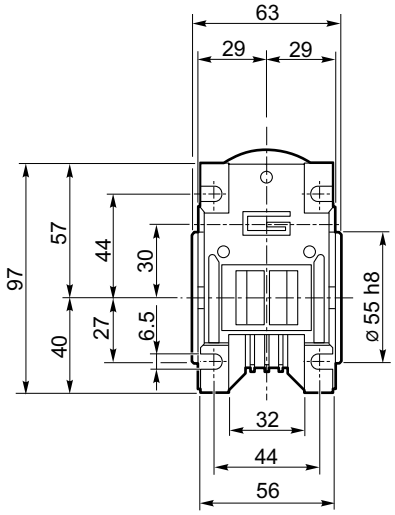

CM 030 F

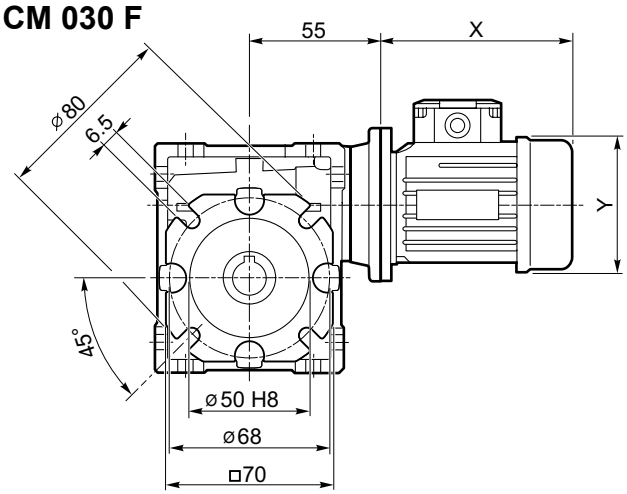

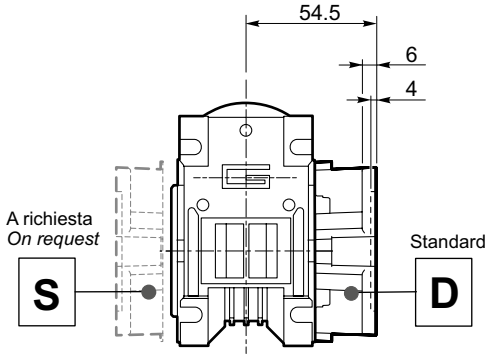

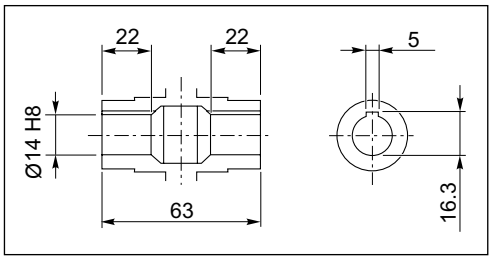

Albero lento cavo / *Hollow output shaft*

CMIS 030 ..

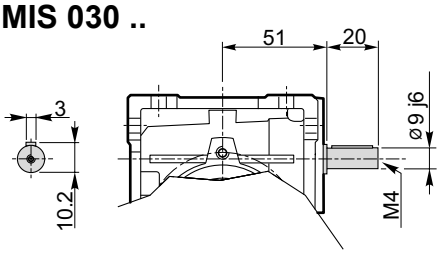

CMP ..

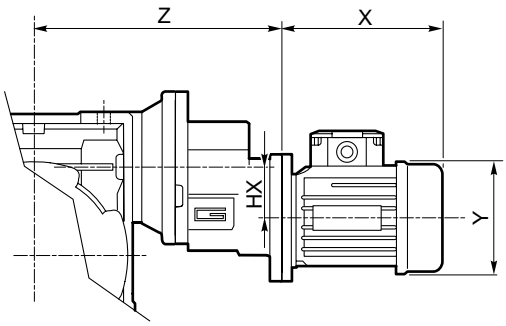

	HX	Z	Kg
056/030	30.5	124	2.1

Dimensioni ***Dimensions***

CM 040 U

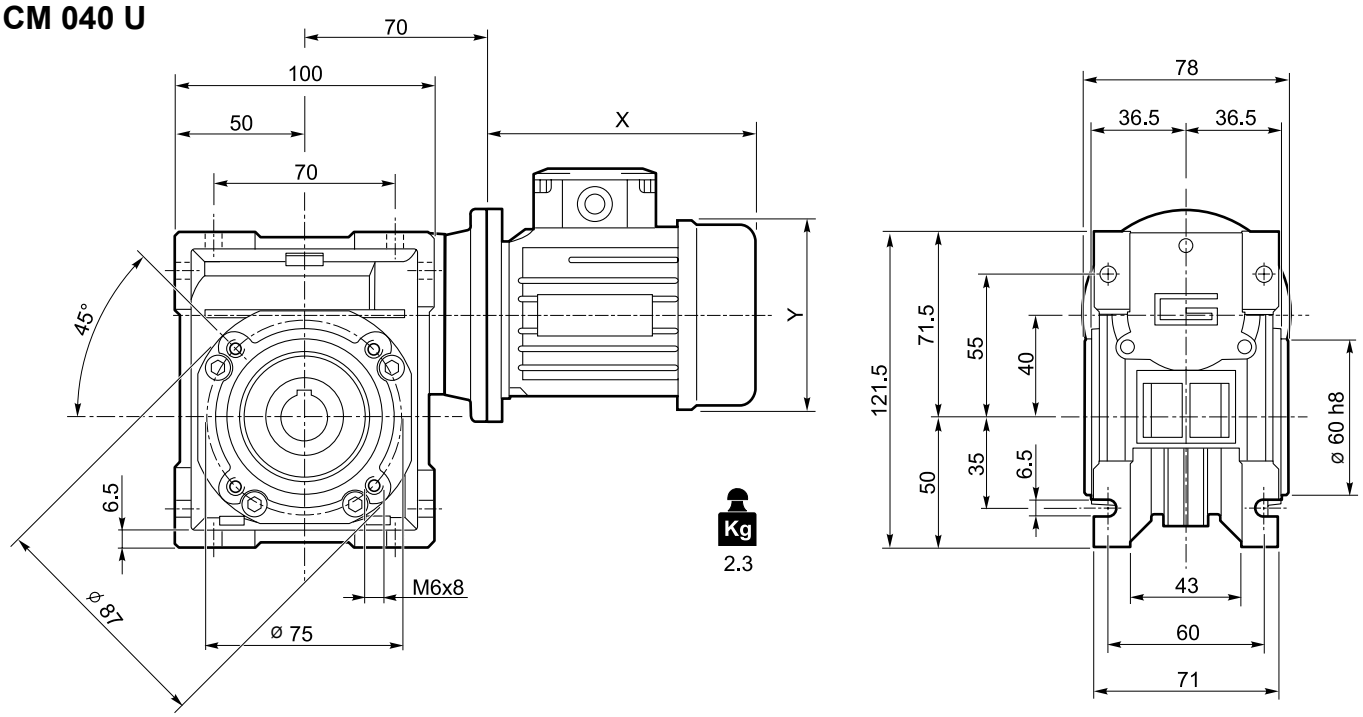

CMIS 040 ..

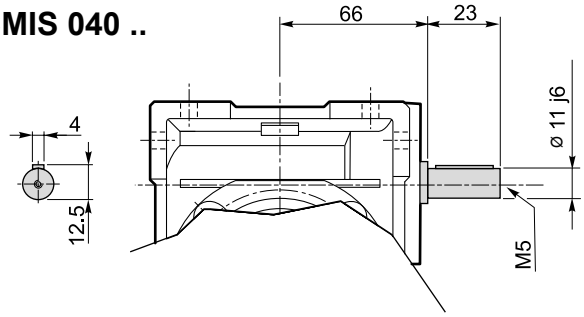

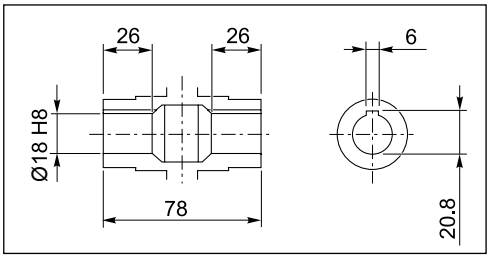

Albero lento cavo / *Hollow output shaft*

CMP ..

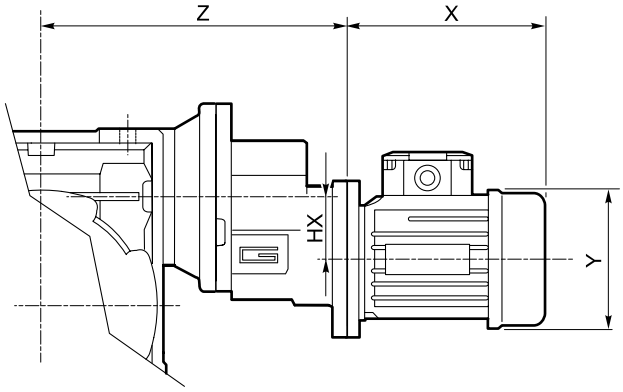

	HX	Z	Kg
056/040	30.5	139	3.2
063/040	30.5	142	3.3

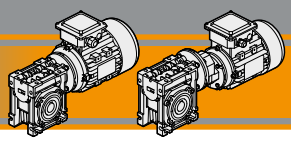

Dimensioni

Dimensions

CM 040 F

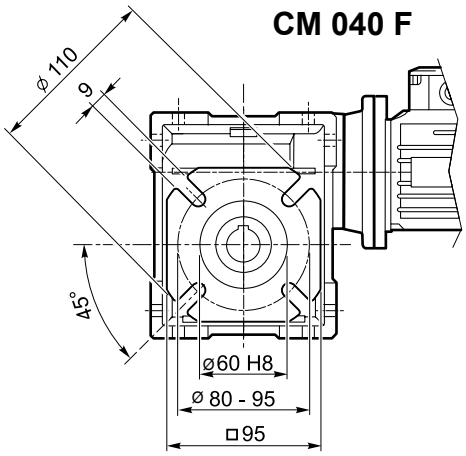

CMP../040 F

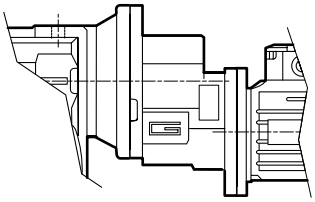

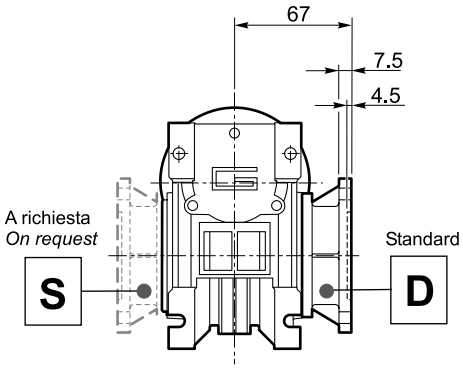

CM 040 FB

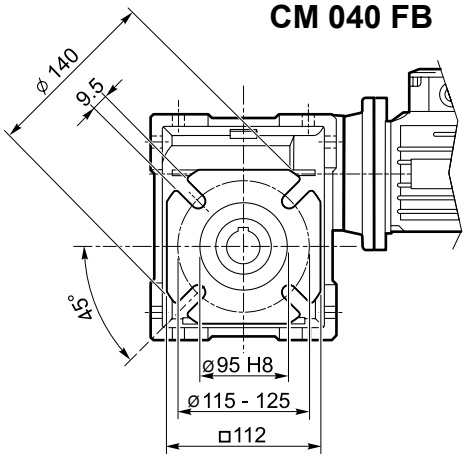

CMP../040 FB

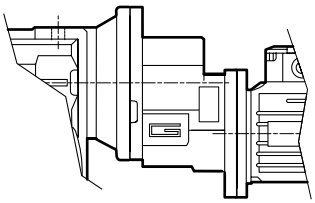

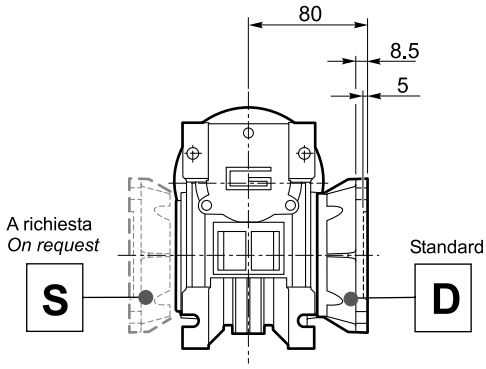

CM 040 FL

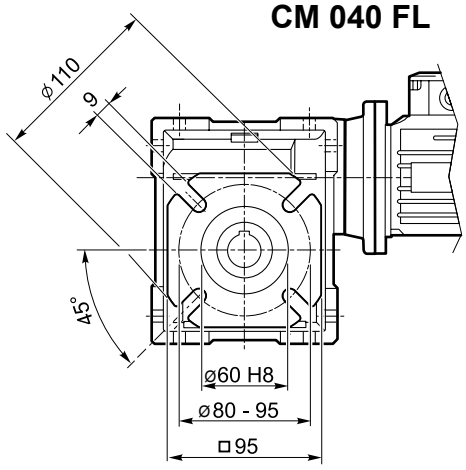

CMP../040 FL

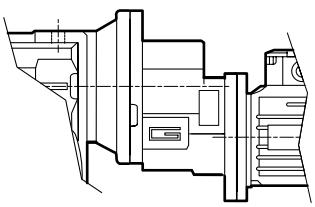

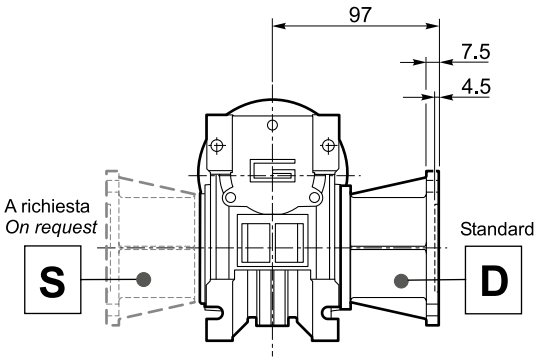

Dimensioni ***Dimensions***

CM 050 U

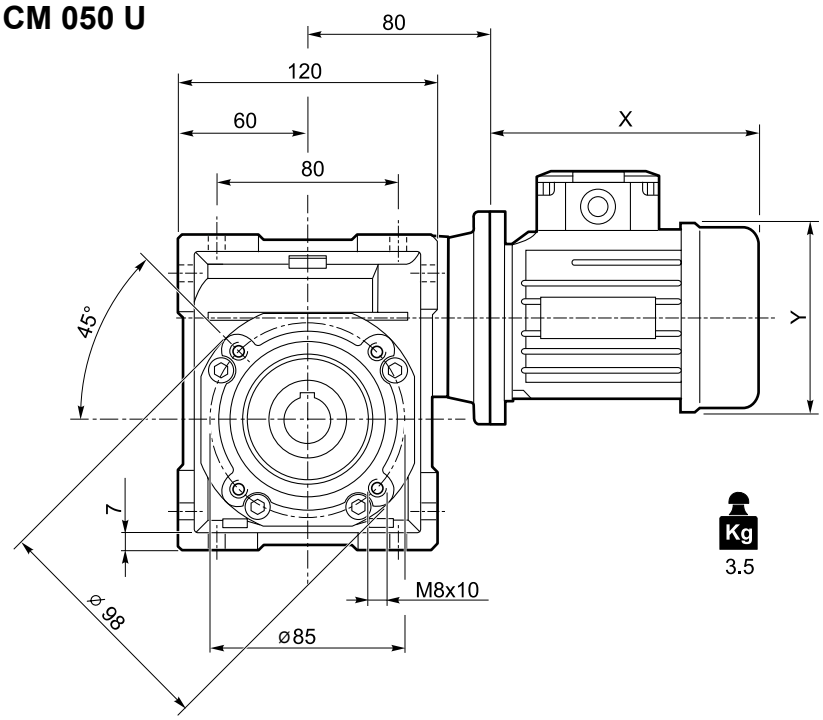

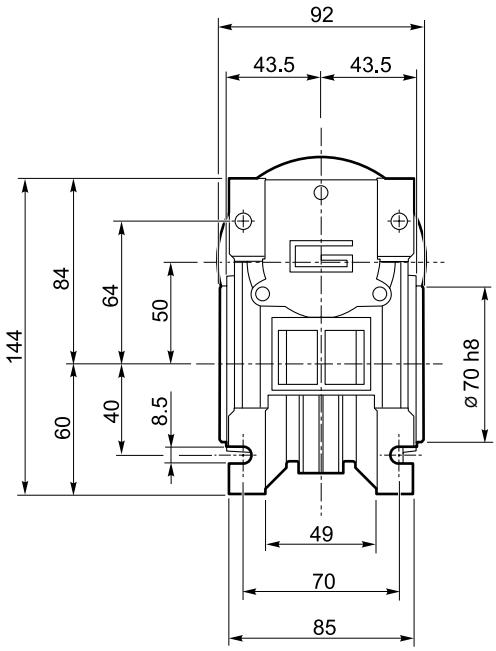

CMIS 050 ..

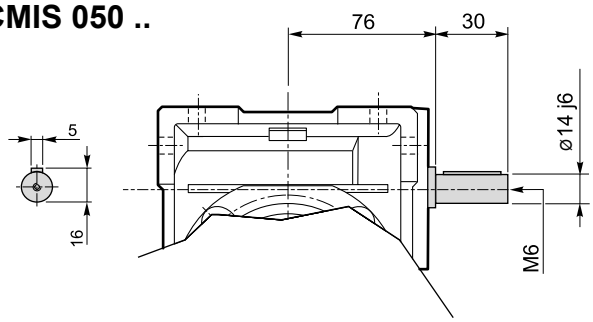

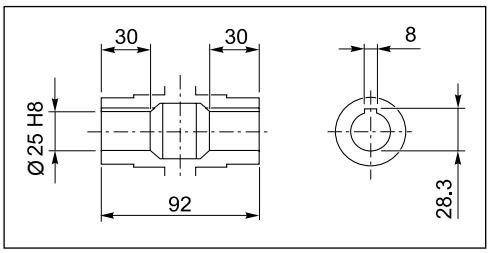

Albero lento cavo / *Hollow output shaft*

CMP ..

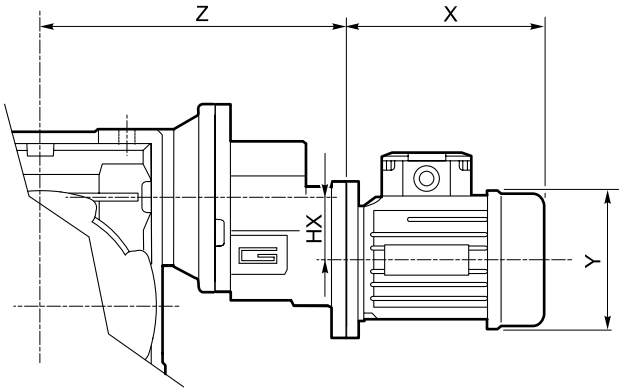

	HX	Z	Kg
063/050	30.5	152	4.5
071/050	41	169	5.5

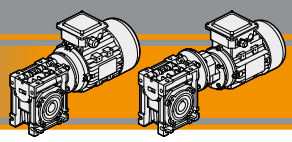

Dimensioni

Dimensions

CM 050 F

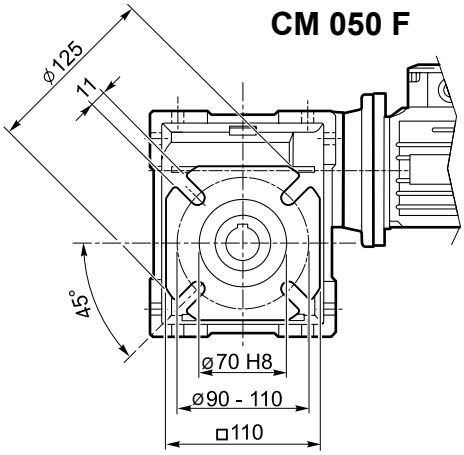

CMP../050 F

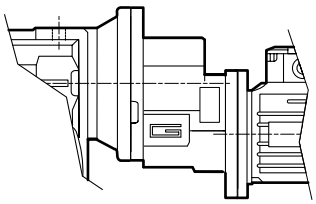

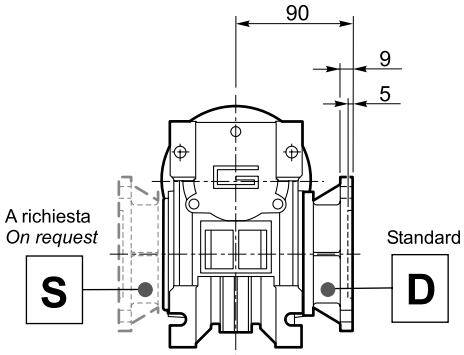

CM 050 FB

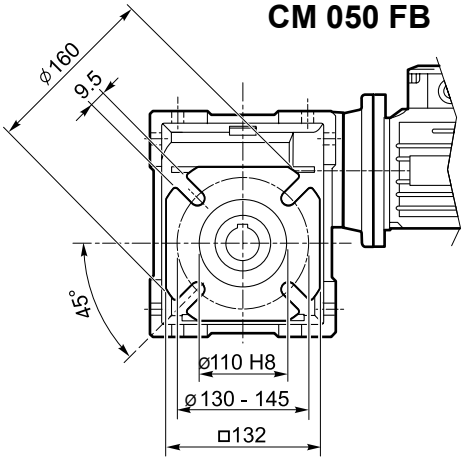

CMP../050 FB

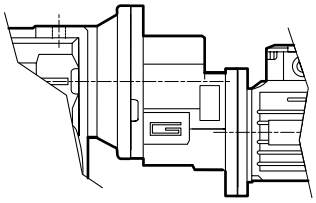

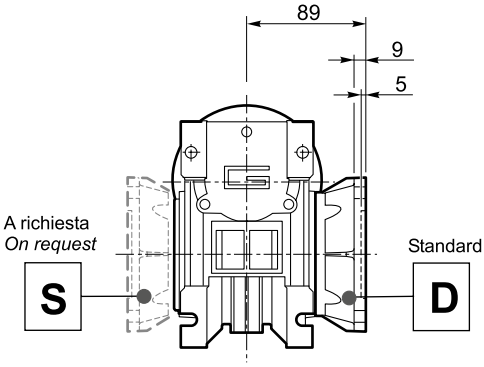

CM 050 FL

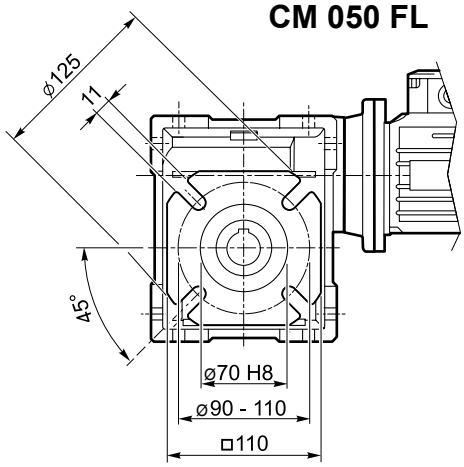

CMP../050 FL

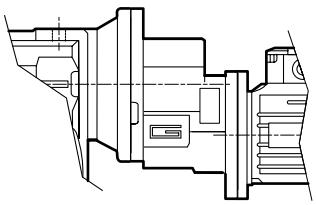

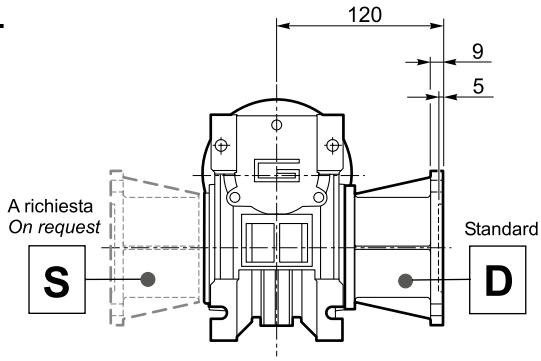

Dimensioni ***Dimensions***

CM 063 U

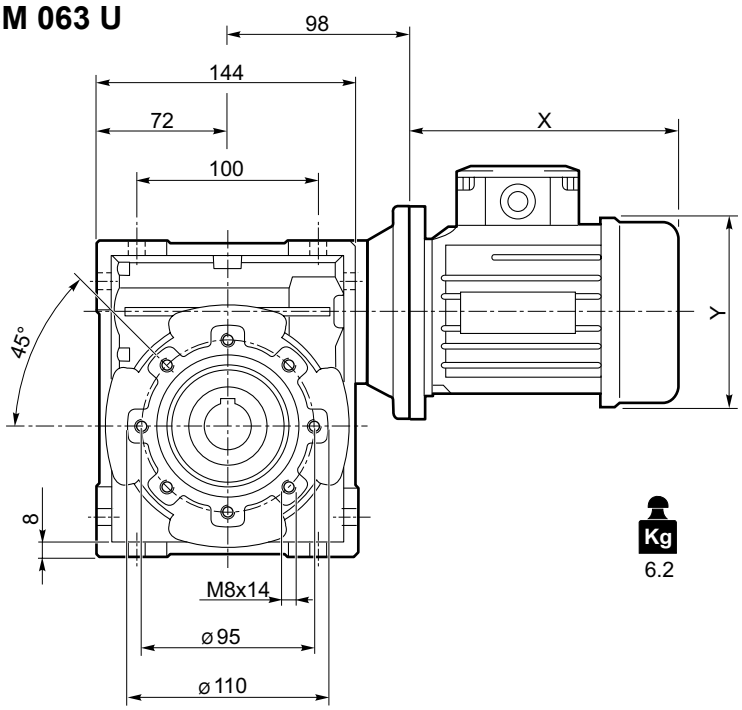

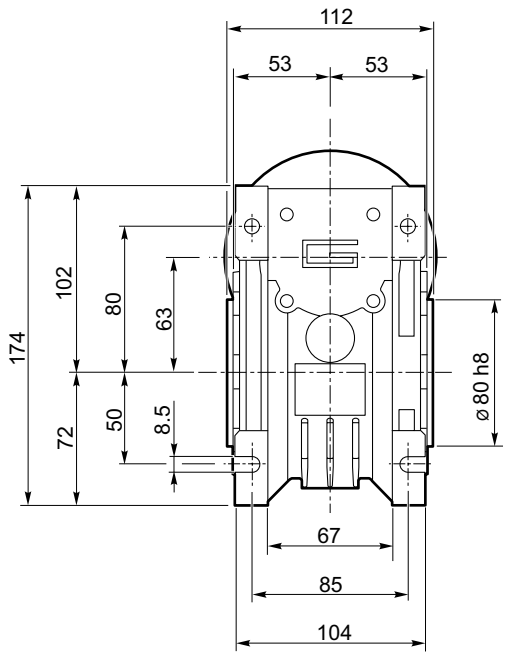

CMIS 063 ..

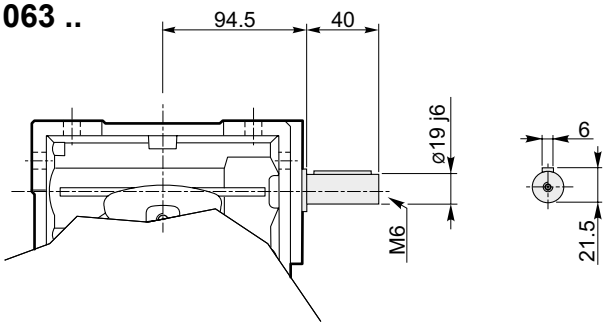

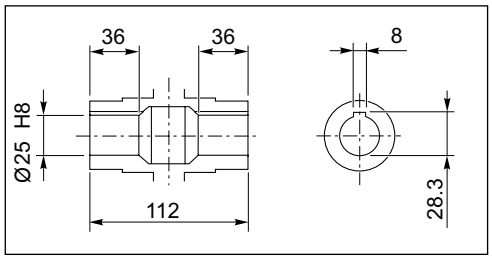

Albero lento cavo / *Hollow output shaft*

CMP ..

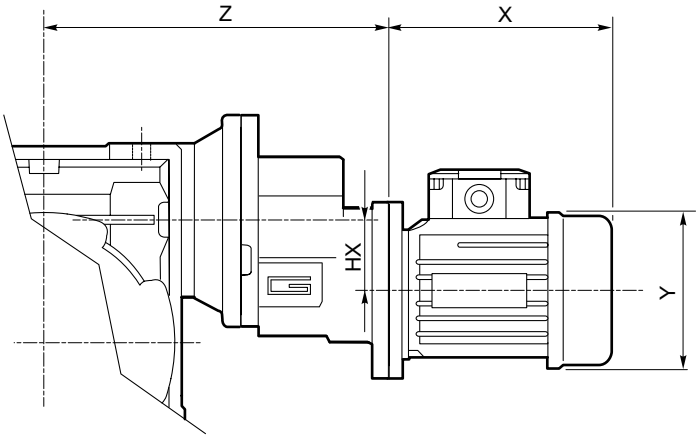

	HX	Z	Kg
063/063	30.5	170	7.2
071/063	41	187	8.2
080/063	41	198	9.0

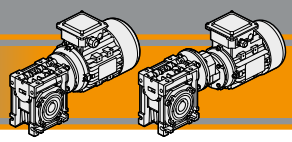

Dimensioni

Dimensions

CM 063 F

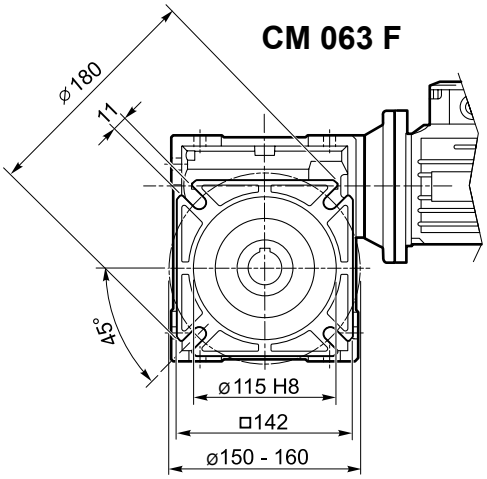

CMP../063 F

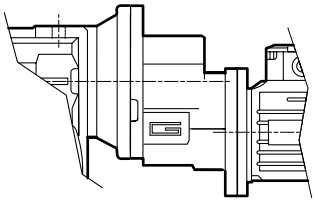

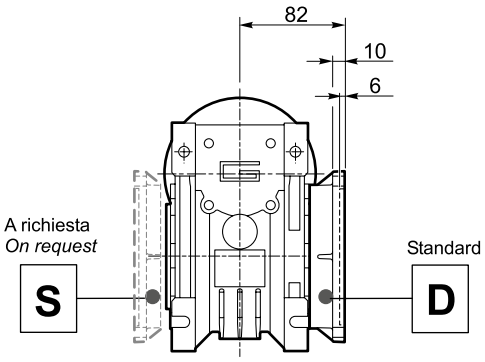

CM 063 FB

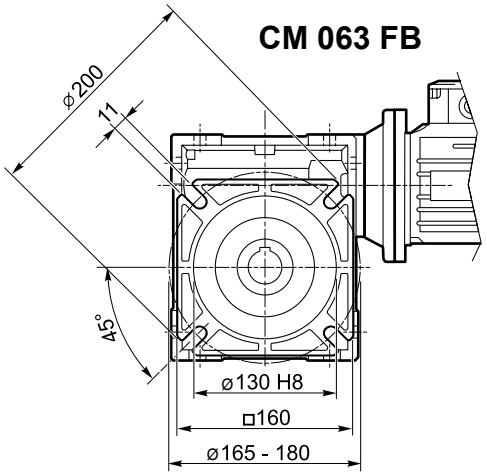

CMP../063 FB

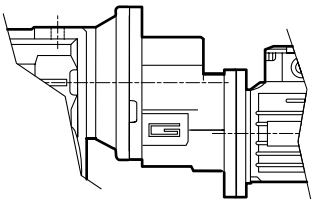

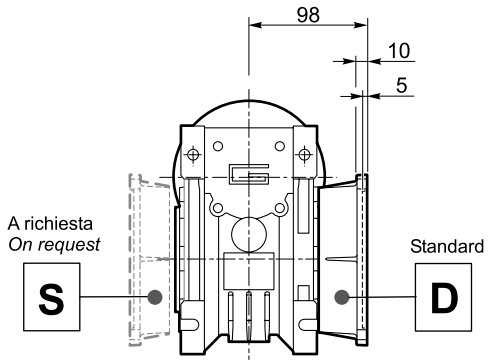

CM 063 FL

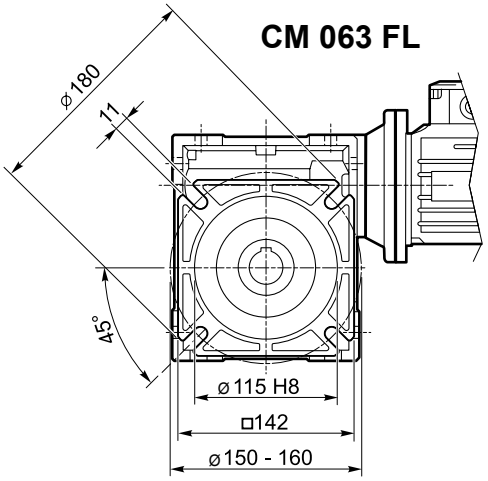

CMP../063 FL

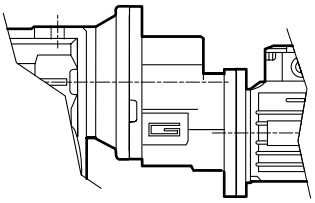

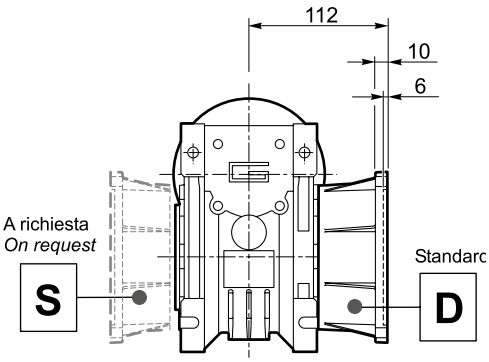

Dimensioni — *Dimensions*

CM 070 U

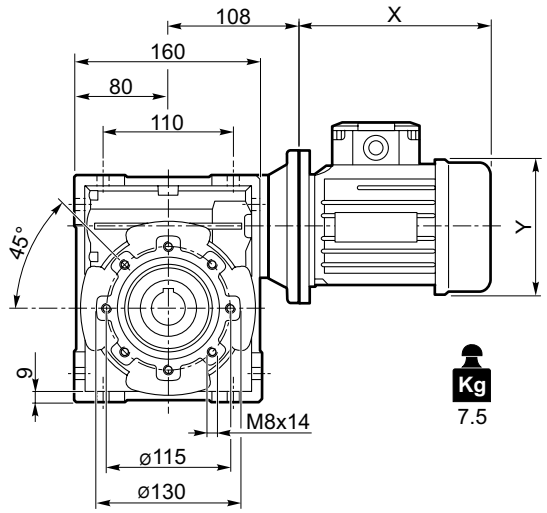

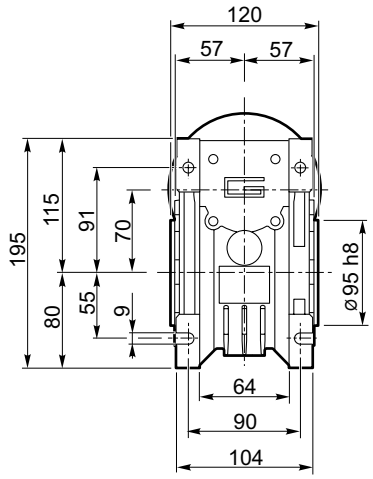

CM 070 F

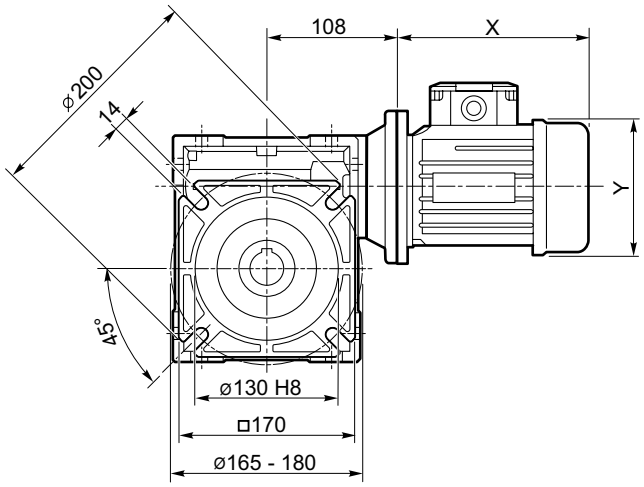

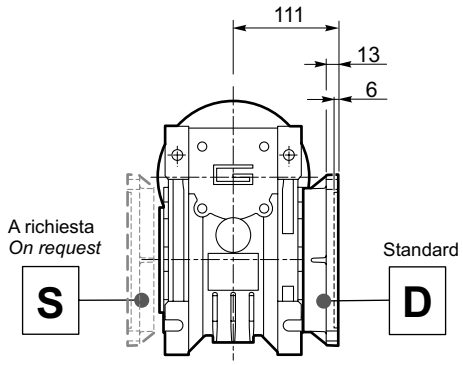

CMIS 070 ..

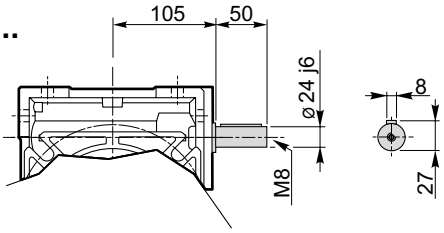

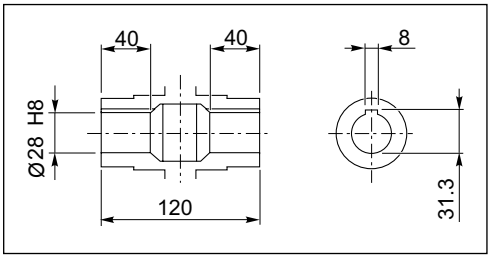

Albero lento cavo / *Hollow output shaft*

CMP ..

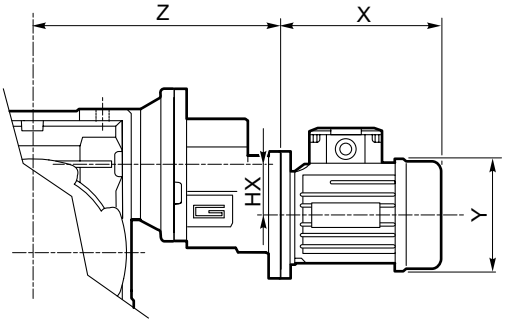

	HX	Z	Kg
071/070	41	197	9
080/070	41	208	9.8
090/070	36.5	262	10.5

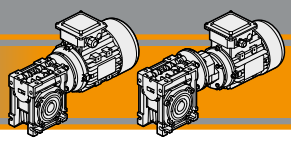

Dimensioni ***Dimensions***

CM 075 U

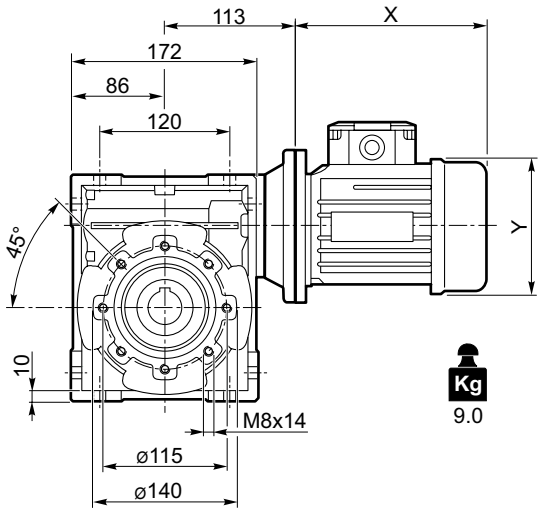

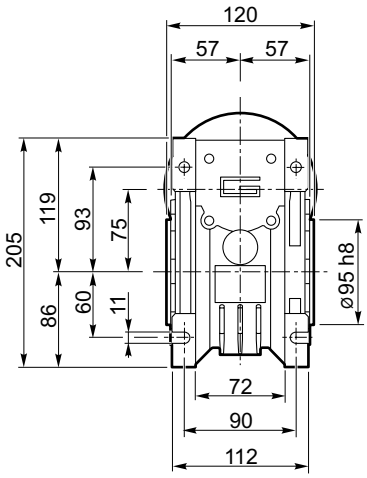

CM 075 F

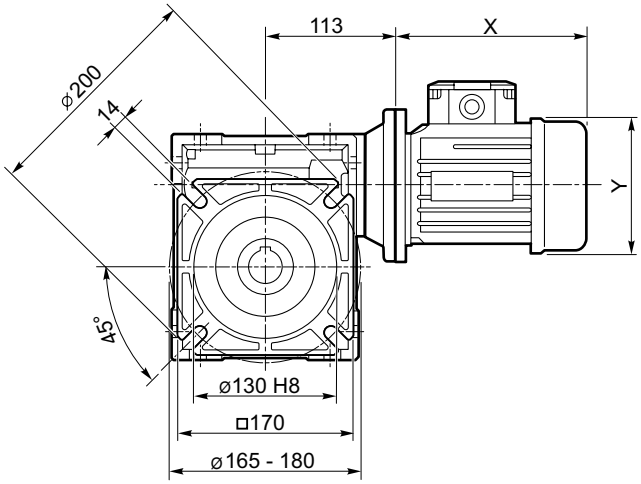

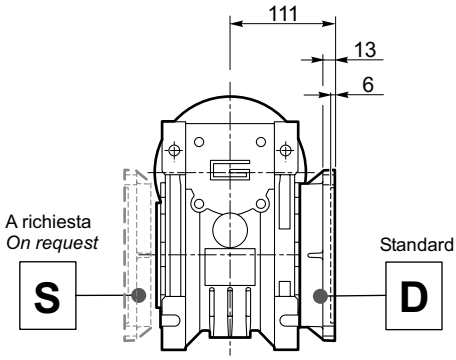

CMIS 075 ..

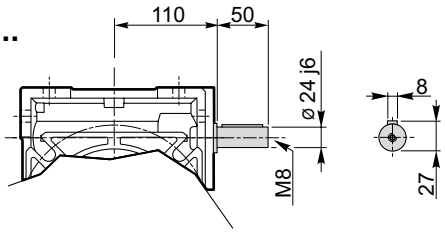

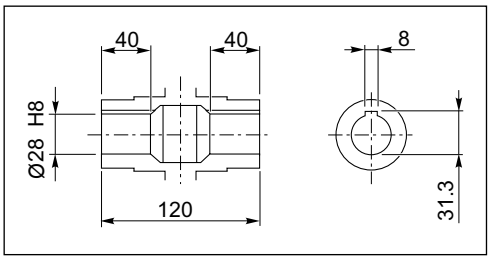

Albero lento cavo / *Hollow output shaft*

CMP ..

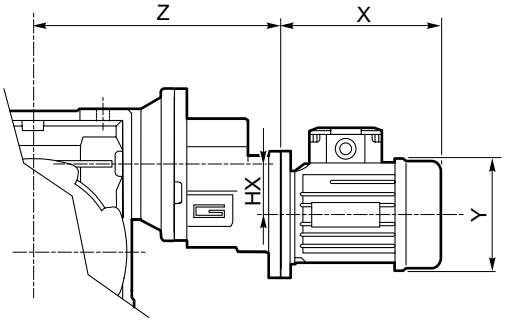

	HX	Z	Kg
071/075	41	202	11.0
080/075	41	213	11.8
090/075	36.5	267	12.5

Dimensioni ***Dimensions***

CM 090 U

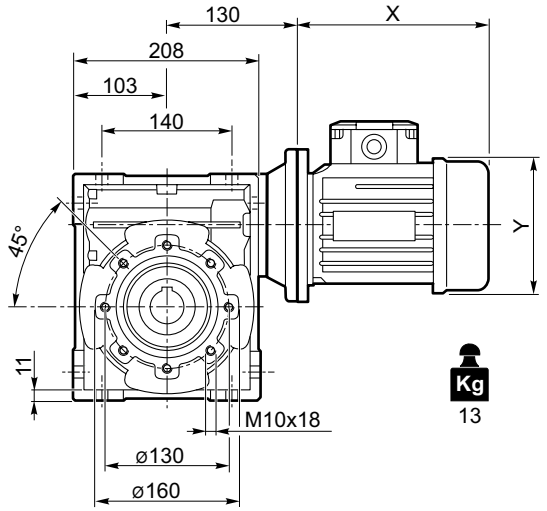

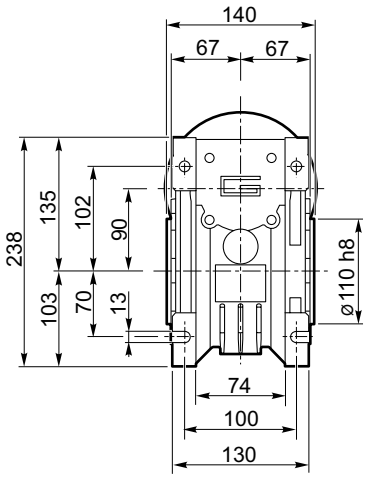

CM 090 F

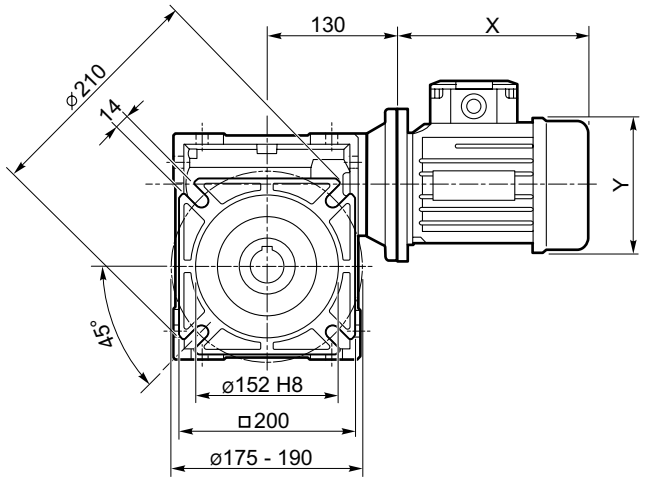

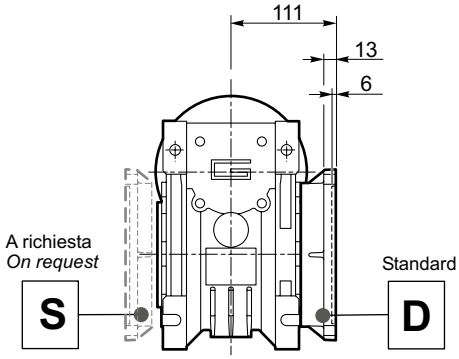

CMIS 090 ..

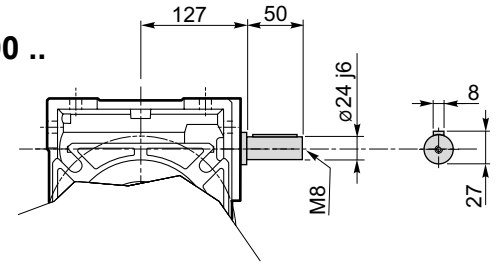

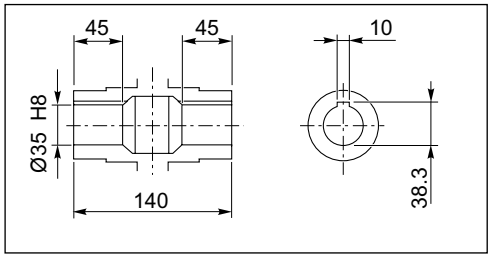

Albero lento cavo / *Hollow output shaft*

CMP ..

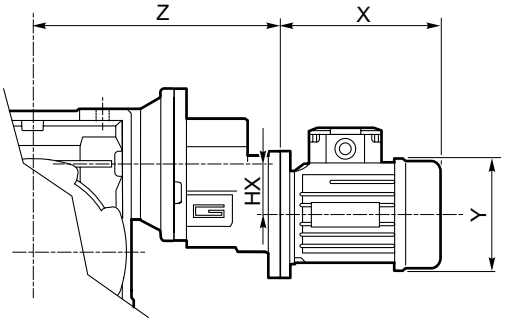

	HX	Z	Kg
071/090	41	219	15.0
080/090	41	230	15.8
090/090	36.5	284	16.5

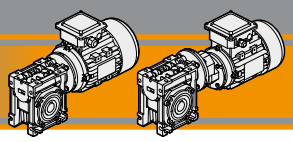

Dimensioni ***Dimensions***

CM 110 U

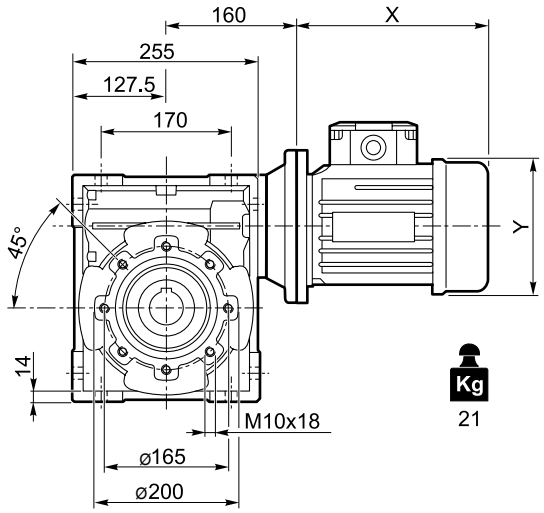

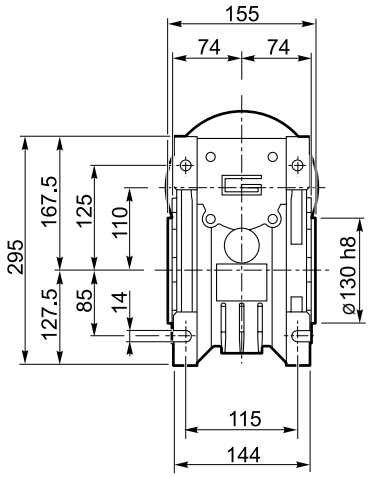

CM 110 F

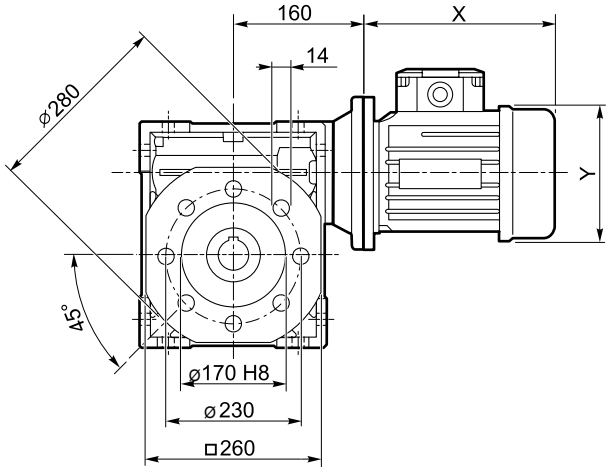

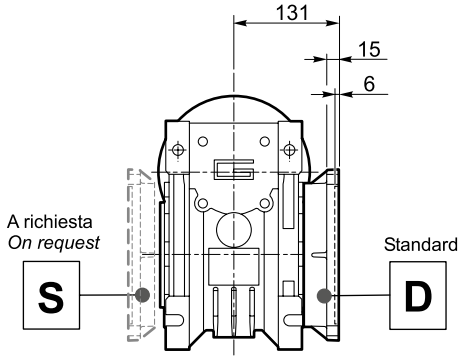

CMIS 110 ..

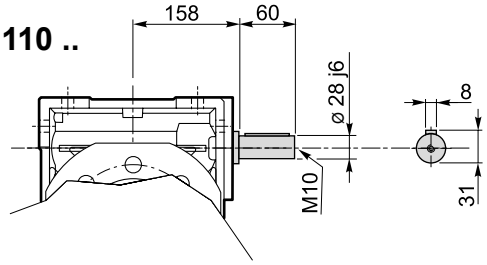

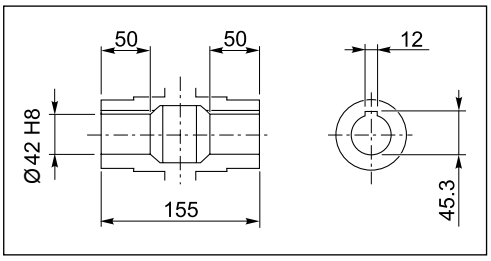

Albero lento cavo / *Hollow output shaft*

CMP ..

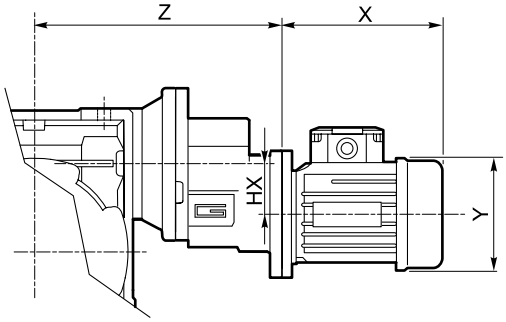

	HX	Z	Kg
080/110	41	260	23.8
090/110	36.5	314	24.5

Dimensioni — *Dimensions*

CM 130 U

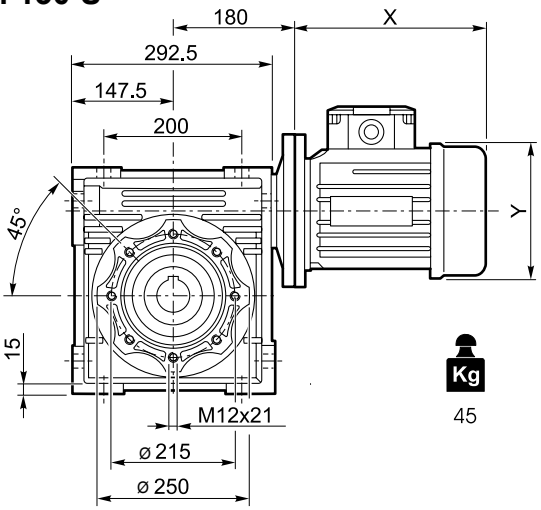

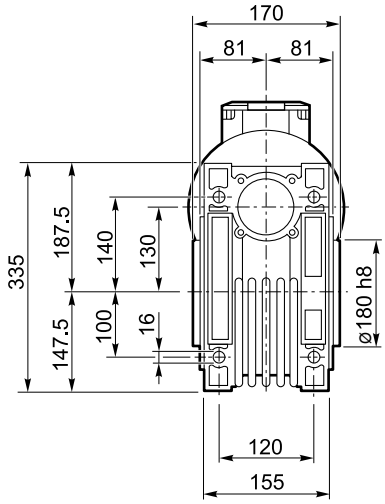

CM 130 F

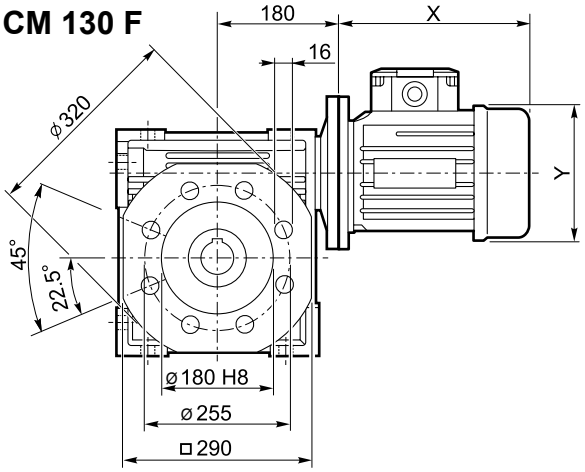

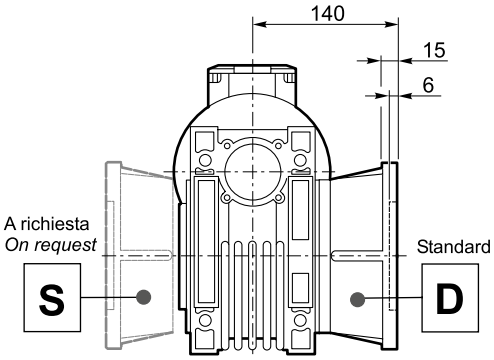

CMIS 130 ..

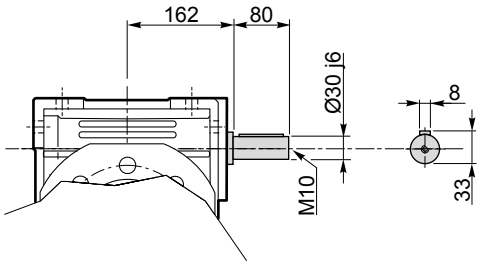

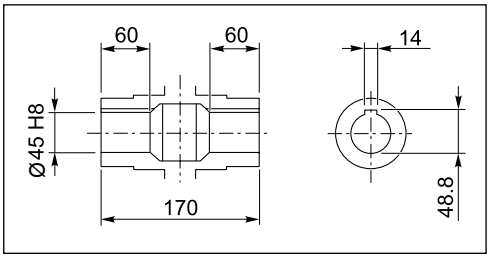

Albero lento cavo / *Hollow output shaft*

CMP ..

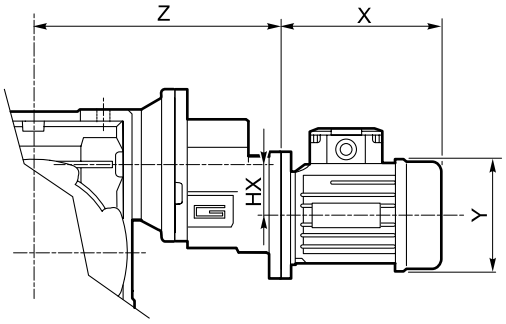

	HX	Z	Kg
080/130	41	280	47.8
090/130	36.5	334	48.5

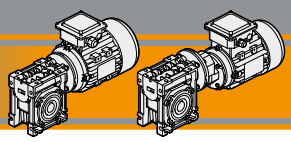

Accessori

Accessories

Albero lento semplice e doppio

Single and double output shaft

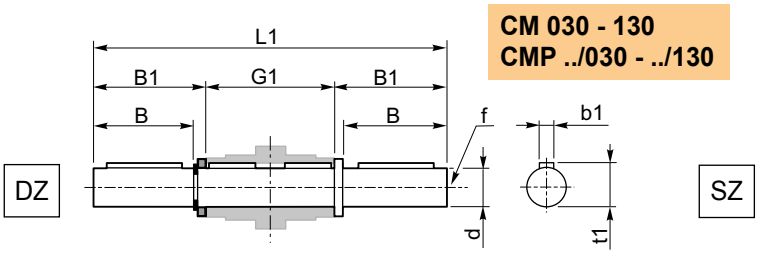

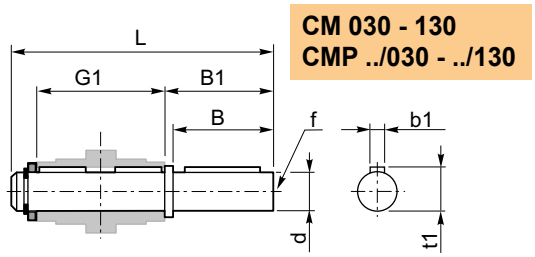

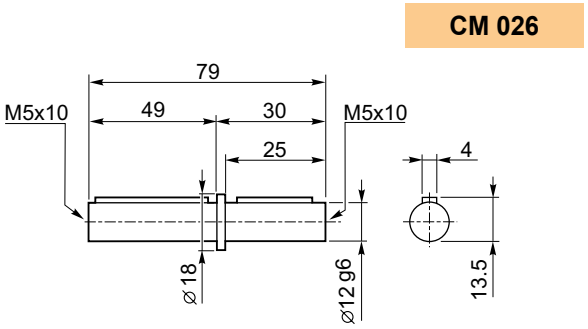

CM	CMP	d h7	B	B1	G1	L	L1	f	b1	t1
030	056/030	14	30	32.5	63	102	128	M6	5	16
040	056/040 063/040	18	40	43	78	128	164	M6	6	20.5
050	063/050 071/050	25	50	53.5	92	153	199	M10	8	28
063	063/063 071/063 080/063	25	50	53.5	112	173	219	M10	8	28
070	071/070 080/070 090/070	28	60	63.5	120	192	247	M10	8	31
075	071/075 080/075 090/075	28	60	63.5	120	192	247	M10	8	31
090	071/090 080/090 090/090	35	80	84.5	140	234	309	M12	10	38
110	080/110 090/110	42	80	84.5	155	249	324	M16	12	45
130	080/130 090/130	45	80	85	170	265	340	M16	14	48.5

Braccio di reazione

Torque arm

CM	CMP	K1	G	KG	KH	R
030	056/030	85	14	23	8	15
040	056/040 063/040	100	14	31	10	18
050	063/050 071/050	100	14	38	10	18
063	063/063 071/063 080/063	150	14	47.5	10	18
070	071/070 080/070 090/070	200	25	46.5	20	30
075	071/075 080/075 090/075	200	25	46.5	20	30
090	071/090 080/090 090/090	200	25	56.5	20	30
110	080/110 090/110	250	30	62	25	35
130	080/130 090/130	250	30	69	25	35

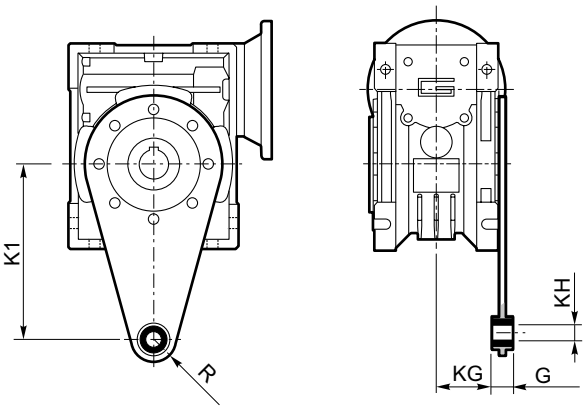

SC - *Safety Cover*

CM	CMP	M
030	056/030	47
040	056/040 063/040	54.5
050	063/050 071/050	62.5
063	063/063 071/063 080/063	73
070	071/070 080/070 090/070	75
075	071/075 080/075 090/075	79
090	071/090 080/090 090/090	94
110	080/110 090/110	102
130	080/130 090/130	117

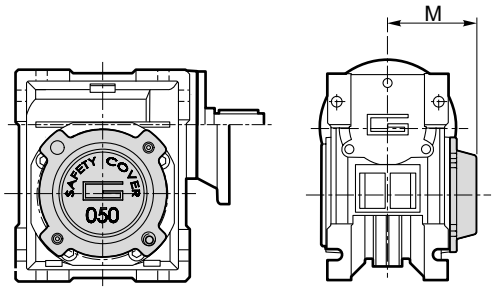

Opzioni — *Options*

VS - Vite sporgente / *Extended input shaft*

CM	CMP	A	B	D_1 j6	E	F	G
030	056/030	45	20	9	M4	3	10.2
040	056/040 063/040	53	23	11	M5	4	12.5
050	063/050 071/050	64	30	14	M6	5	16
063	063/063 071/063 080/063	75	40	19	M6	6	21.5
070	071/070 080/070 090/070	84	40	19	M6	6	21.5
075	071/075 080/075 090/075	90	50	24	M8	8	27
090	071/090 080/090 090/090	108	50	24	M8	8	27
110	080/110 090/110	135	60	28	M10	8	31
130	080/130 090/130	—	—	—	—	—	—

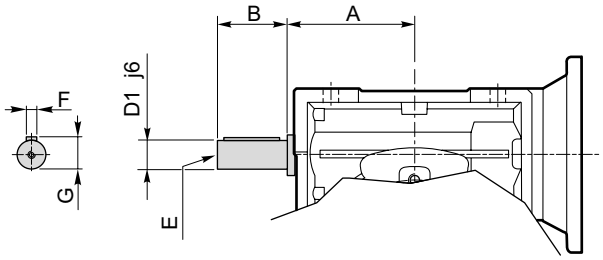

Costruito su richiesta
Built on request

MA TRANSTECNO S.A.P.I. DE C.V.
Av. Mundial # 176, Parque Industrial
JM Apodaca, Nuevo León,
C.P. 66600
MÉXICO
T +52 8113340920
info@transtecno.com.mx
www.transtecno.com.mx

TRANSTECNO SRL
Via Caduti di Sabbiuno, 11/D-E
40011 Anzola dell'Emilia (BO)
ITALY
T+39 051 64 25 811
F +39 051 73 39 04
sales@transtecno.com
www.transtecno.com

HANGZHOU TRANSTECNO POWER TRANSMISSIONS CO LTD
No.4 Xiuyan Road Fengdu Industry Zone
Pingyao Town Yuhang District
Hangzhou City, Zhejiang Province
311115 – CHINA
T +86 571 86 92 02 60
F +86 571 86 92 18 10
info-china@transtecno.com
www.transtecno.cn

CATACALU0118

TRANSTECNO U.S.A. LLC
5440 S.W. 156th Place Miami,
FL 33185 - USA
Tel: +1 (305) 220-4423
Fax: +1 (305) 220-5945
usaoffice@transtecno.com

TRANSTECNO B.V.
Ind. terrein Wieken/Vinkenhoef
De Stuwdam,43
3815 KM Amersfoort - NETHERLANDS
Tel: +31(0) 33 45 19 505
Fax: +31(0) 33 45 19 506
info@transtecno.nl
www.transtecno.nl

SALES OFFICE INDIA
A/10, Anagha, S.N. Road, Mulund (W) Mumbai
400080 - INDIA
Tel: +91 9820614698
Fax-Italy: +39 051 733 904
indiaoffice@transtecno.com

SALES OFFICE BRAZIL
Rua Dr. Freire Alemão 155 / 402 - CEP. 90450-060
Auxiliadora Porto Alegre RS - BRAZIL
Tel: +55 51 3251 5447
Fax: +55 51 3251 5447
Mobile: +55 51 811 45 962
braziloffice@transtecno.com
www.transtecno.com.br

TRANSTECNO IBÉRICA
THE MODULAR GEARMOTOR, S.A.
C/Enginy, 2 Nave 6 - 08850 Gavà (Barcelona) - SPAIN
Tel: +34 931 598 950
info@transtecno.es
www.transtecno.es

SALES OFFICE SOUTH KOREA
D-304 Songdo BRC Smart Valley 30, Songdomirae-ro,
Yeonsu-gu, Incheon, 406-840 - KOREA
Tel: +82 70 8288 2107
Fax: +82 32 815 2107
Mobile: +82 10 5094 2107
koreaoffice@transtecno.com

SALES OFFICE FRANCE
12 Impasse des Mûriers
38300 Ruy - FRANCE
Tel: +33 (0) 6 85 12 09 87
Fax-Italy: +39 051 733 904
franceoffice@transtecno.com
www.transtecno.fr

SALES OFFICE OCEANIA
44 Northview drive, Sunshine west 3020
Victoria - AUSTRALIA
Ph +61 03 9312 4722
Fax +61 03 9312 4714
Mobile: +61 0438060997
oceaniaoffice@transtecno.com
www.transtecno.com.au

TRANSTECNO®
the modular gearmotor

www.transtecno.com

designed by Procedi srl