WAT

THREE PHASE & SINGLE PHASE

INDUSTRIAL MOTORS

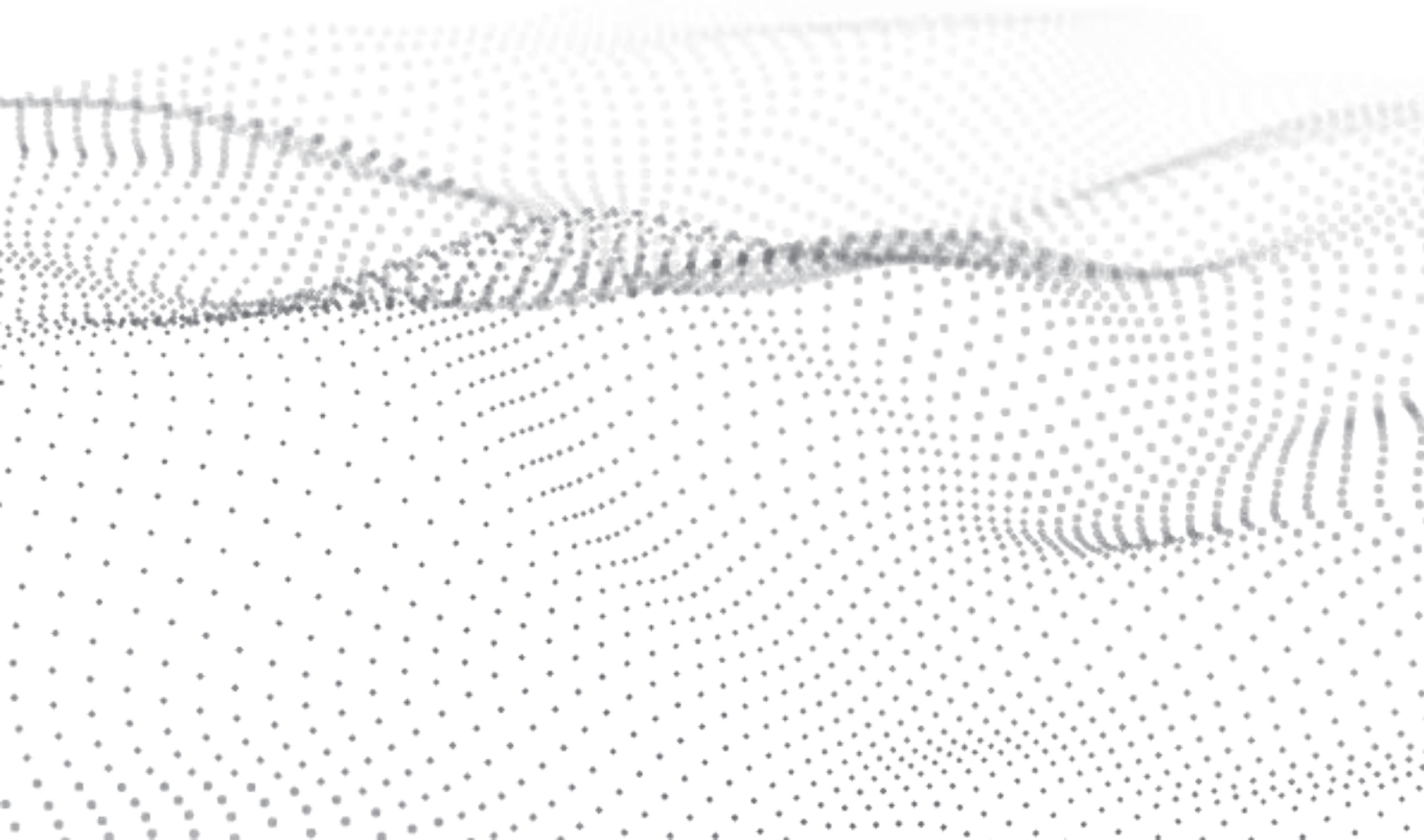

WAT

CONTENT

Table of Contents 4
Production Site 6

TECHNICAL DOCUMENTATION

Certifications and Declarations 7
International Standards 8
Insulation Classification 9
Degree of Protection 9
Vibration/Balancing 10
Environmental Conditions 10
Electrical Connections 11
Voltage & Frequency 11
Tolerances 12
Mounting Arrangements 13
Bearings 13
Lubrication 14
Painting 14
Feet 14
Terminal box 14
Drain/Condensation Holes 14
Motor Identification Symbols 15
Permissible Radial Loads 16
Permissible Axial Loads 17
Duty-Type 18
Induction Motors Fed by Inverter 19
Efficiency 20

THREE PHASE ALUMINIUM MOTORS

Electrical Characteristics IE4 24
Dimensions IE4 25
Electrical Characteristics IE3 30
Dimensions IE3 32
Electrical Characteristics IE3 N Series 40
Dimensions IE3 N Series 41
Electrical Characteristics IE2 46
Dimensions IE2 49

THREE PHASE CAST IRON MOTORS

Electrical Characteristics IE3 60
Dimensions IE3 61

SMOKE EXTRACTION MOTORS

Electrical Characteristics IE3 68
Dimensions IE3 69
Electrical Characteristics IE2 70
Dimensions IE2 73
Dimensions F300 Pad Mount 75

76

BRAKE MOTORS

Technical Documentation	78
Electrical Characteristics	79
Dimensions	80
Brake Kit	84
Brake Kit Nomenclature	85
Brake Kit Dimensions	88

98

SINGLE PHASE MOTORS

Technical Documentation	100
Electrical Characteristics	101
Dimensions	102
Electrical Characteristics	103
Dimensions	104

90

INVERTER ENTEGRATED MOTORS

Technical Documentation	92
Dimensions Q3D	93

106

SPECIAL MOTORS

110

MOTOR PARTS LIST

PRODUCTION SITE

WAT Motor Sanayi ve Ticaret A.Ş. performs manufacturing operations at its factory in Çerkezköy, Tekirdağ. WAT Motor Sanayi ve Ticaret A.Ş. manufactures various kinds of three phase and single phase motors with up to date technology in a closed area of 20.000m^2.

With a team of engineers, expert on electrical motors, the plant provides the users with necessary technical consultancy services, and offers a product range including three-phase asynchronous motors in 20.000 different versions and single-phase asynchronous motors in 500 different versions.

With the purpose of launching products beyond customer expectations, new technologies are closely followed and adapted in the plant. To convey product design into the production lines more quickly computer assisted production technology and concurrent engineering methods are being used.

WAT Motor Sanayi ve Ticaret A.Ş., exporting more than half of its production and whose products are preferred abroad, expand its customer portfolio via constant and competitive quality policies. Continuous follow-up customer demands and complaints is considered main instrument for product development and customer satisfaction. Thanks to the advantage of long term relationships with customers-producers and dealers, the plant increases competitive power for both itself and the customers.

TECHNICAL DOCUMENTATION

INTERNATIONAL STANDARDS

Electric motors are manufactured according to the international standards listed below:

IEC 60034-1	Rating and performance
IEC 60034-2-1	Methods for determining losses and efficiency
IEC 60034-5	Classification of degrees of protection
IEC 60034-6	Methods of cooling
IEC 60034-7	Symbols of construction and mounting arrangements
IEC 60034-8	Terminal markings and direction of rotation
IEC 60034-9	Noise limits
IEC 60034-11	Built-in thermal protection
IEC 60034-14	Vibration limits
IEC 60034-18-1	Functional evaluation of insulation system
IEC 60034-30	Efficiency classes (IE-code)
IEC 60038	Standard voltages
IEC 60072	Dimensions and output series for rotating electrical machines
EN 50347	Dimensions and output for electrical machines
EN 55014-1 EN 61000-3-2 EN 61000-3-3	Electromagnetic compatibility

Turkey	Germany	Great Britain
TSE EN 60034-1	DIN VDE 0530 DIN EN 60034	BS EN 60034

Three phase and single phase motor series are complying with UL Efficiency and are available in our standard motor range. Those motors are marked with our certification number E235514 upon request.

Safety certification is the process of assessing the compliance of products to recognized safety requirements. Our three phase and single phase motor series are complying with UL Safety. Those motors are marked with our certification number E235514 upon request.

Three phase and single phase motor series are complying with CC Certification and are available in our standard motor range. Those motors are marked with our certification number CC329B upon request.

INSULATION CLASSIFICATION

Our standard motors have insulation class F while the temperature rise is for Class B ensuring longer service life.

Upon the customer's request, H class insulation motors are manufactured.

Under specified measuring conditions in accordance with IEC 60034-1 standard, insulation class F for an electric motor means that at ambient temperature of 40°C the temperature rise of its windings may be max. 105°C with the additional temperature margin of 10°C.

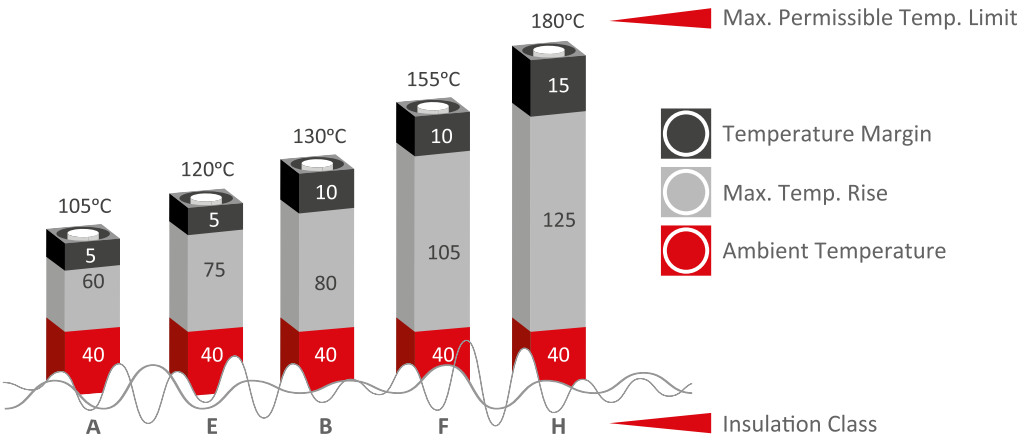

DEGREE OF PROTECTION

According to IEC 60034-5 standard, electric motors are provided with IP code which determines the degree of protection ensured by the housing against access to dangerous parts, introducing foreign matter and/or water.

Our motors comply with IP55 protection class as standard.

Please ask for other protection classes.

IP	5 The first characteristic numeral: Protection from introduction of solid foreign matter	5 The second characteristic numeral: Protection against penetration of water and its harmful effects	
0	Non-protected machine	Non-protected machine	0
1	Machine protected against solid objects greater than 50 mm	Machine protected against dripping water	1
2	Machine protected against solid objects greater than 12 mm	Machine protected against dripping water when tilted up to 15°	2
3	Machine protected against solid objects greater than 2.5 mm	Machine protected against spraying water	3
4	Machine protected against solid objects greater than 1 mm	Machine protected against splashing water	4
5	Dust-protected machine	Machine protected against water jets	5
6	Dust-tight machines	Machine protected against heavy seas	6

VIBRATION/BALANCING

All rotors are balanced dynamically with half key and this is indicated on the rating plate with letter H.

In accordance to IEC 60034-14, vibration level A is guaranteed for the standard motors. On customer demand, motors with reduced vibration level may also be produced.

Vibration levels with respect to frame size

Vibration Grade	Shaft Height [mm]	56≤ H ≤ 132		132< H ≤ 280		H > 280	
	Mounting	Velocitiy [mm/s]	Acceleration [m/s²]	Velocitiy [mm/s]	Acceleration [m/s²]	Velocitiy [mm/s]	Acceleration [m/s²]
A	Free suspension	1,6	2,5	2,2	3,5	2,8	4,4
B	Free suspension	0,7	1,1	1,1	1,7	1,8	2,8

ENVIRONMENTAL CONDITIONS

Motors are designed to operate at altitudes up to 1000 m and ambient temperature up to 40°C according to IEC 60034-1. Rated output will change at the % ratings given below for different altitudes and ambient temperatures.

ALTITUDE		up to 1000 m	1500 m	2000 m	2500 m	3000 m	3500 m	4000 m
Insulation class	B	100	97	94	90	86	82	77
	F	100	98	95	91	87	83	78

AMBIENT TEMPERATURE		30°C	35°C	40°C	45°C	50°C	55°C	60°C
Insulation class	B	106	106	100	97	92	86	60
	F	105	102	100	97	93	87	82

ELECTRICAL CONNECTIONS

Terminal plate has 6 connection terminals marked in accordance with IEC 60034-8.

Motor Type	Frame Size	63-80	90-100	112	132-160	180	200-225	250-280	315	355
QE	Cable Entry	M20	M25	M25	M32	M40	M50	M50/M63(*)	M63	M63
	Number of Entries	1	1	2	2	2	2	2	2	4
QH	Cable Entry	M20	M25	M25	M32	M40	M50	M50	M63	-
	Number of Entries	1	2	2	2	2	2	2	2	-
QHS	Cable Entry	-	M20	M25	M25	M32	-	-	-	-
	Number of Entries	-	1	2	2	2	-	-	-	-
QN	Cable Entry	M20	M25	-	-	-	-	-	-	-
	Number of Entries	1	2	-	-	-	-	-	-	-

*Optional

Standard three-phase motors can be connected with star or delta method.

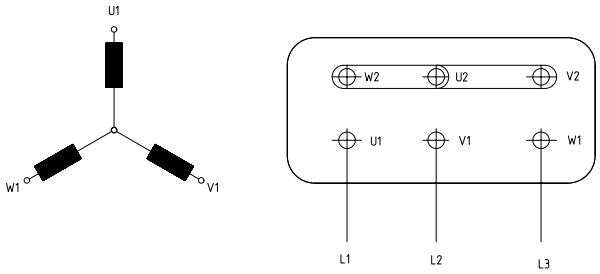

Star connection is achieved by wiring W2, U2, V2 to each other; and U1, V1, W1 leads to voltage supply

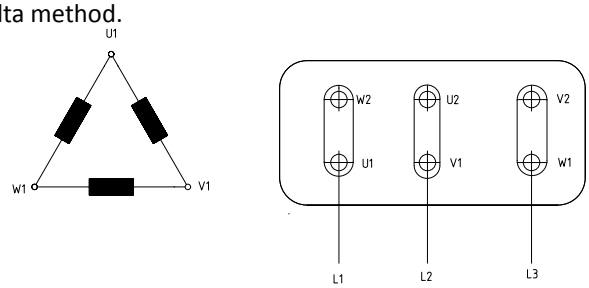

Delta connection is achieved by wiring the end of a phase to the head of the other.

STAR-DELTA (Y/Δ) START-UP

Most low voltage motors are delta wired to operate in 400V and star wired to operate at 690V. This flexibility can also be used to operate the motor under lower voltages. Apart from the fact that startup current in star-delta starting drops to one third of direct starting, startup moment also decreases by around 25%. The motor is started in star connection and accelerated as much as possible, then it is transferred to delta connection. This method can only be used in asynchronous motors which are delta-connected to supply voltage.

VOLTAGE & FREQUENCY

Our motors are normally design for 400V, 50Hz. Other voltages and 60 Hz frequency are optional. Our motors wound for 50Hz can be operated on 60Hz for the same output power. The ratios given below indicate changes in the given parameters.

		60 Hz Application Coefficients of 50 Hz Motor						
50 Hz Voltage	60 Hz Voltage	Rated Speed	Rated Power	Rated Torque	Rated Current	Starting Torque	Breakdown Torque	Starting Current
230 V	230 V	1,2	1	0,83	1	0,83	0,83	0,83
230 V	265 V	1,2	1,15	0,96	1	0,96	0,96	0,96
400 V	400 V	1,2	1	0,83	1	0,70	0,83	0,83
400 V	460 V	1,2	1,15	0,96	1	0,95	0,98	0,97

TOLERANCES

According to IEC 60034-1, catalogue values are permitted to deviate from the real values as follows:

Speed [n]	$\Delta n = \pm 20\% [n_S - n_N]$, $P_N > 1kW$ $\Delta n = \pm 30\% [n_S - n_N]$, $P_N <= 1kW$
Efficiency % [n]	$\Delta n = -15\% [100 - n_N]$, $P_N <= 150kW$ $\Delta n = -10\% [100 - n_N]$, $P_N > 150kW$
Power Factor [cos Q]	$\Delta \cos Q = -1/6 [1 - \cos Q]$
Locked Rotor Current $[I_L/I_N]$	$\Delta [I_L/I_N] = +20\% [I_L/I_N]$
Locked Rotor Torque $[M_L/M_N]$	min $[M_L/M_N] = -15\% [M_L/M_N]$ max $[M_L/M_N] = +25\% [M_L/M_N]$
Breakdown Torque $[M_K/M_N]$	$\Delta [M_K/M_N] = -10\% [M_K/M_N]$
Pull-up Torque $[M_P/M_N]$	$\Delta [M_P/M_N] = -15\% [M_P/M_N]$
Moment of Inertia [J] [kgm^2]	$\Delta J = \pm 10\% J$
Sound Pressure Level [LPA] [dB]	$\Delta LPA = +3dB[A]$

Frame	Housing	Fan	Fan Cover	B3-NDE Endshield	B5 Flange	B14a/B14b Flange
63 71	Aluminium	Plastic	Steel	Aluminium	Aluminium	Aluminium
80 90 100 112 132 160 180 200 225 250	Aluminium/ Cast Iron			Aluminium/ Cast Iron	Aluminium/ Cast Iron	Aluminium/ Cast Iron
					Cast Iron	Cast Iron
280 315 355	Cast Iron			Cast Iron		

MOUNTING ARRANGEMENTS

B3 - IM 1001	V5 - IM 1011	V6 - IM 1031	B6 - IM 1051	B7 - IM 1061	B8 - IM 107	
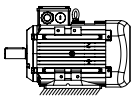	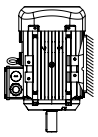	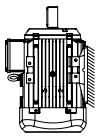	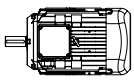	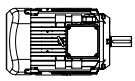	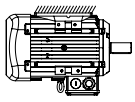	
B5 - IM 3001	V1 - IM 3011	V3 - IM 3031				FA
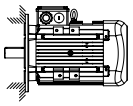	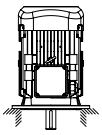	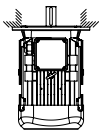				
B14 - IM 3601	V18 - IM 3611	V19 - IM 3631				FB or FC
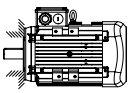	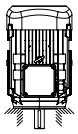					
B35 - IM 2001	V15 - IM 2011	V35 - IM 2031	IM 2051	IM 2061	IM 2071	PA
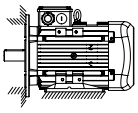	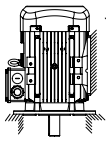	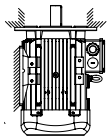	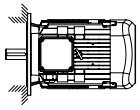	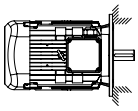	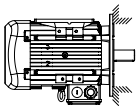	
B34 - IM 2101	V17 - IM 2111	V37 - IM 2131	IM 2151	IM 2161	IM 2171	PB or PC
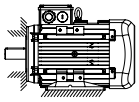	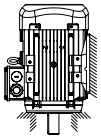	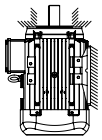	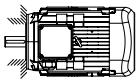	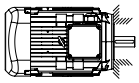	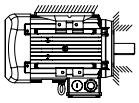	

BEARING

63-225 frame motors are equipped with deep grove ball bearings with ZZ shields.

250-355 frame size motors have external lubrication.

Please refer to the mechanical dimension section for specific motor data.

LUBRICATION

Closed type (2Z) roller bearings are being used. These types of roller bearings do not require maintenance since they are lubricated with the type of lubricant specified by the manufacturer.

Roller bearings should be replaced after 20,000 hours of operation (approx. 2-5 years of use) due to the specified operation temperature, vibration level and shaft loads.

The grease type and quantity are written on the nameplate for motors that have externally lubricated roller bearings. There are bearing lubrication channel and grease nipple for motors that have externally lubricated bearings. After lubrication, grease nipple cover must be closed. Grease must be avoided from dirt and dust during lubrication. Quantity of grease indicated on the nameplatel should be considered and different grease must not be used. The mix of different grease must be avoided.

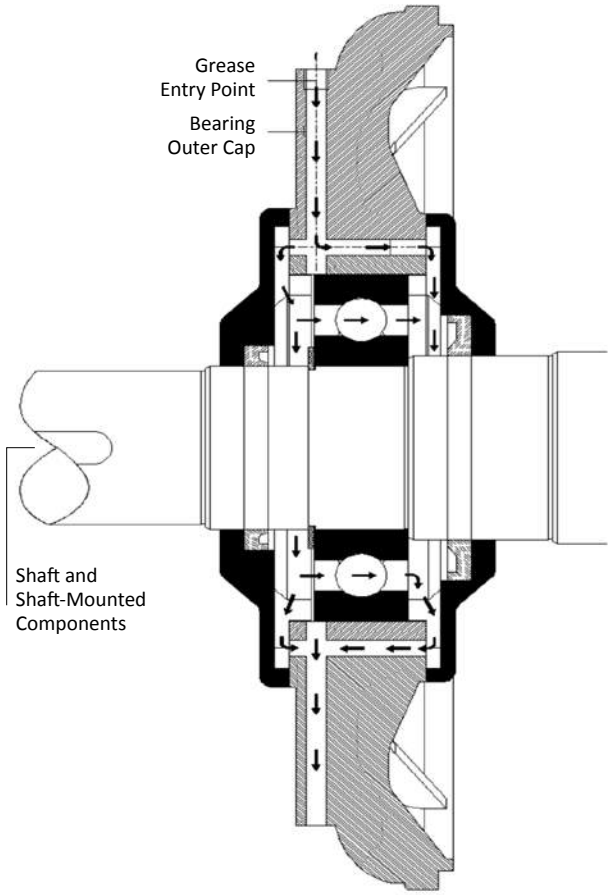

PAINTING

Our standard range of motors are painted with a grey protective paint according to RAL 7031 (grey). Other paint options are also available on request.

FEET

For 63-200 frame size aluminium motors, feet can be mounted on three sides, allowing terminal box assembly on the desired side. For 63-250 frame size aluminium motors, the feet are detachable and this feature provides flexibility for different mounting types.

TERMINAL BOX

Motors have terminal boxes situated on top at drive end. Terminal boxes can be rotated 90° for 63-250 frame sizes (except N series), so that conduits can be placed at each side of the motor.

DRAIN/CONDENSATION HOLES

In the basic design, motors are supplied without holes. In case of customer requests, motors can be supplied with drain holes. Since these motors are provided with a special plug in the hole, the degree of protection remains IP 55.

MOTOR IDENTIFICATION SYMBOLS

Q3E FA 225 M 4 C-43 (Sample motor number)

Q3E	**Motor Type**		**225**	**.**	**Frame Size**		**Shaft height (mm)**
Q4H	IE4 efficiency class motors						
Q3H	IE3 efficiency class motors						
Q3HS	IE3 efficiency class motors						
Q2H	IE2 efficiency class motors						
Q2HS	IE2 efficiency class motors						
Q4E	IE4 efficiency class motors						
Q3E	IE3 efficiency class motors						
Q2E	IE2 efficiency class motors		**M**	**.**	**Motor Length**	**S**	**Short**
Q3D	IE3 efficiency class inverter entegrated motors					M	Medium
S3H	IE3 efficiency class smoke extraction motors					L	Long
S2H	IE2 efficiency class smoke extraction motors						
QM	Single phase motors with run capacitor						
QC	Single phase motors with start and run capacitors						
P	**Housing Type**						
---	Aluminium		**4**	**.**	**Number of Poles**		**2.4.6.8 Poles**
P or G	Cast Iron						
FA	**Construction Type**		**C**	**.**	**Core Length**		**(Does not affect outside dimensions)**
---	with feet	B3,B6,B7,B8,V5,V6/V19				A	Short
FA	with A flange	B5,V1,V3				B	Medium
FB	with B flange	B14,V18,V19				C	Long
FC	with C flange	B14,V18,V19				D,E	Extra Long
FS	with special flange	-					
PA	with feet and A flange	B3/B5,V1/V5,V3/V6					
PB	with feet and B flange	B3/B14,V5/V18,V6/V19	**43**	**.**	**Special Motor Number**		**01 - ... - 99**
PC	with feet and C flange	B3/B14,V5/V18,V6/V19					
PS	with feet and special flange	-					
X	without feet,flange and /or end-shield	B9,V8,V9					

PERMISSIBLE RADIAL LOADS

Radial Load Location		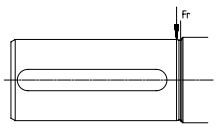	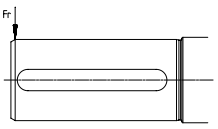
Frame Size	Speed [rpm]	RADIAL LOAD [X=0] [kN]	RADIAL LOAD [X=max] [kN]
63	3000	0,25	0,22
	1500	0,29	0,25
	1000	0,31	0,27
71	3000	0,30	0,26
	1500	0,35	0,29
	1000	0,37	0,31
80	3000	0,54	0,45
	1500	0,62	0,51
	1000	0,66	0,54
90	3000	0,91	0,74
	1500	0,99	0,80
	1000	1,04	0,84
100	3000	1,21	0,96
	1500	1,31	1,04
	1000	1,38	1,09
112	3000	1,23	1,00
	1500	1,33	1,09
	1000	1,40	1,14
132	3000	1,22	0,98
	1500	1,31	1,04
	1000	1,34	1,08
160	3000	2,22	1,72
	1500	2,34	1,82
	1000	2,34	1,82
180	3000	2,68	2,12
	1500	2,82	2,23
	1000	2,93	2,31
200	3000	3,80	3,04
	1500	3,95	3,16
	1000	4,07	3,26
225	3000	4,45	3,65
	1500	4,59	3,60
	1000	4,73	3,71
250	3000	4,97	3,93
	1500	5,78	4,57
280	3000	4,97	3,93
	1500	5,78	4,57
315	3000	6,04	5,23
	1500	6,08	5,61
355	3000	5,88	5,17
	1500	8,49	7,37

* All calculations are based on floating bearing arrangement for standard (excluding compact & super compact) motors.

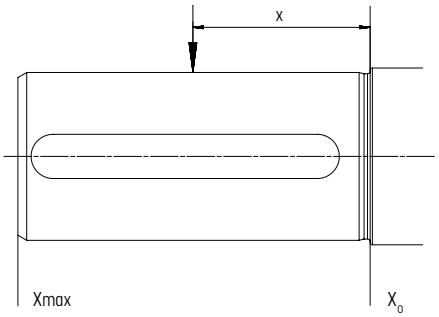

Calculations are based on 20.000h (L10aah) bearing life time and the actual values will differ if radial and axial loads act at the same time. Mechanical strength of the end-shields should also be considered for critical applications.

Value of force F_r acting on any point of the shaft end (between points X=max and X=0) may be calculated according to the following formula:

$$F_r = F_{x0} - \frac{x}{E} \times (F_{x0} - F_{xmax}) \, [kN]$$

Where; F_{x0} - value of F_r force acting on the beginning of the shaft end

F_{xmax} - value of F_r force acting on the shaft end

E - length of the shaft end

PERMISSIBLE AXIAL LOADS

Position & Axial Load Direction		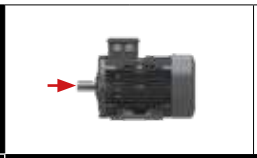		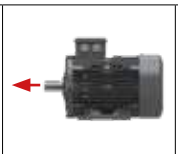	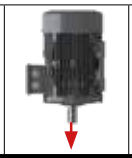					
Frame Size	Speed [rpm]	MOTOR SERIES / AXIAL LOADS [kN]								
		QH, QE	QHS	QH, QHS, QE	QH, QHS, QE	QH , QE	QHS	QH, QHS, QE	QH , QE	QHS
63	3000	0,09		0,23	0,22	0,10		0,24	0,08	
	1500	0,09		0,31	0,29	0,11		0,33	0,07	
	1000	0,09		0,36	0,34	0,11		0,38	0,07	
71	3000	0,11		0,25	0,23	0,13		0,27	0,09	
	1500	0,11		0,33	0,31	0,14		0,36	0,09	
	1000	0,11		0,39	0,37	0,14		0,42	0,09	
80	3000	0,15	0,15	0,43	0,40	0,18	0,18	0,46	0,12	0,12
	1500	0,15	0,15	0,57	0,53	0,19	0,19	0,61	0,11	0,11
	1000	0,15	0,15	0,67	0,63	0,19	0,19	0,71	0,11	0,11
90	3000	0,19	0,15	0,75	0,70	0,23	0,20	0,80	0,14	0,10
	1500	0,19	0,15	0,99	0,93	0,25	0,22	1,06	0,12	0,09
	1000	0,19	0,15	1,18	1,12	0,25	0,22	1,25	0,12	0,09
100	3000	0,19	0,19	0,94	0,88	0,25	0,25	1,01	0,12	0,12
	1500	0,19	0,19	1,25	1,17	0,27	0,27	1,34	0,10	0,10
	1000	0,19	0,19	1,49	1,41	0,27	0,27	1,58	0,10	0,10
112	3000	0,23	0,19	0,94	0,86	0,31	0,27	1,02	0,14	0,11
	1500	0,23	0,19	1,25	1,14	0,34	0,30	1,36	0,11	0,07
	1000	0,23	0,19	1,49	1,38	0,34	0,30	1,60	0,11	0,07
132	3000	0,30	0,23	0,93	0,75	0,48	0,41	1,11	0,12	0,04
	1500	0,30	0,23	1,23	1,01	0,52	0,44	1,45	0,08	9,00
	1000	0,30	0,26	1,46	1,24	0,52	0,47	1,68	0,08	0,04
160	3000	0,34	0,30	1,78	1,53	0,59	0,55	2,03	**	**
	1500	0,34	0,30	2,40	2,01	0,72	0,69	2,79	**	**
	1000	0,34	0,30	2,75	2,36	0,72	0,69	3,14	**	**
180	3000	0,38	0,34	2,01	1,65	0,73	0,69	2,37	**	**
	1500	0,38	0,34	2,70	2,18	0,90	0,86	3,22	**	**
	1000	0,38	0,34	3,20	2,68	0,90	0,86	3,72	**	**
200	3000	0,38		2,60	1,95	1,03		3,25	**	
	1500	0,38		3,52	2,77	1,13		4,27	**	
	1000	0,38		4,20	3,45	1,13		4,95	**	
225	3000	0,49		2,90	2,10	1,29		3,70	**	
	1500	0,49		3,90	2,90	1,49		4,90	**	
	1000	0,49		4,65	3,65	1,49		5,65	**	
250	3000	0,60		3,65	2,65	1,60		4,65	**	
	1500	0,60		4,75	3,54	1,81		5,96	**	
280	3000	0,60		3,65	2,38	1,87		4,92	**	
	1500	0,60		4,75	3,11	2,24		6,39	**	
315	3000	4,56		3,68	1,52	7,90		**	**	
	1500	5,20		4,00	1,08	9,62		**	**	
355	3000	4,52		3,62	0,38	9,50		**	**	
	1500	6,40		5,00	2,73	13,55		**	**	

* All calculations are based on floating bearing arrangement for standard (excluding compact & super compact) motors.
** Please get in contact for a specific design.

DUTY TYPE

Duty types according to the IEC 60034-1 are given below:

S1: Continuous running duty

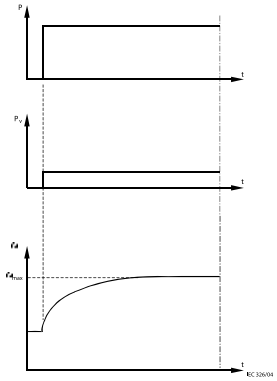

P	load
P_v	electrical losses
ϑ	temperature
ϑ_{max}	maximum temperature attained
t	time

S2: Short-time duty

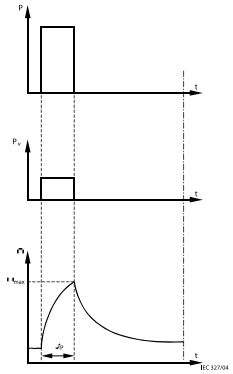

P	load
P_v	electrical losses
ϑ	temperature
ϑ_{max}	maximum temperature attained
t	time
t_P	operation time at constant load

S3: Intermittent periodic duty

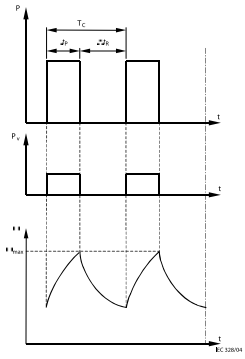

P	load
P_v	electrical losses
ϑ	temperature
ϑ_{max}	maximum temperature attained
t	time
T_C	time of one load cycle
t_P	operation time at constant load
t_R	time de-energized and at rest

S4: Intermittent periodic duty with starting

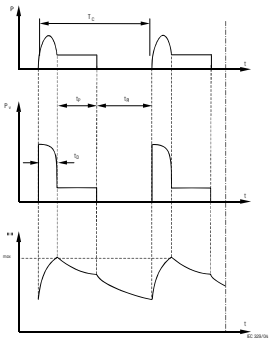

P	load
P_v	electrical losses
ϑ	temperature
ϑ_{max}	maximum temperature attained
t	time
T_C	time of one load cycle
t_D	starting/accelerating time
t_P	operation time at constant load
t_R	time de-energized and at rest

S5: Intermittent periodic duty with electric braking

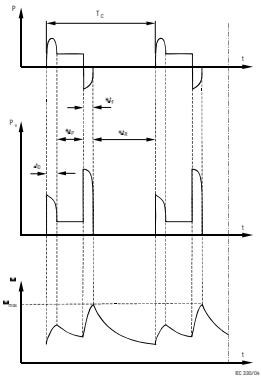

P	load	T_C	time of one load cycle
P_v	electrical losses	t_D	starting/accelerating time
ϑ	temperature	t_P	operation time at constant load
ϑ_{max}	maximum temperature attained	t_F	time of electric braking
t	time	t_R	time de-energized and at rest

S6: Continuous operation periodic duty

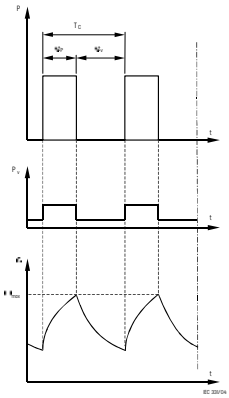

P	load	t	time
P_v	electrical losses	T_C	time of one load cycle
ϑ	temperature	t_P	operation time at constant load
ϑ_{max}	maximum temperature attained	t_V	operation time at no-load

S7: Continuous operation periodic duty with electric braking

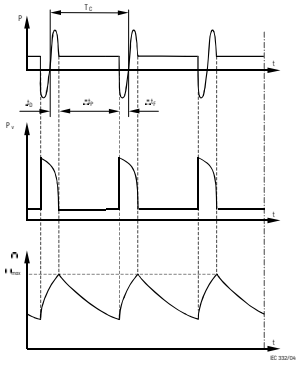

P	load	T_C	time of one load cycle
P_v	electrical losses	t_D	starting/accelerating time
ϑ	temperature	t_P	operation time at constant load
ϑ_{max}	maximum temperature attained	t_F	time of electric braking
t	time		

S8: Continuous operation periodic duty with related load/speed changes

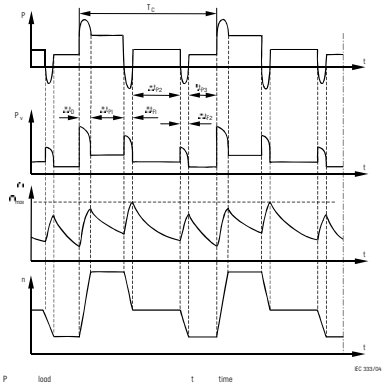

P	load	t	time
P_v	electrical losses	T_C	time of one load cycle
ϑ	temperature	t_D	starting/accelerating time
ϑ_{max}	maximum temperature attained	t_P	operation time at constant load (P1, P2, P3)
n	speed	t_F	time of electric braking (F1, F2)

S9: Duty with non-periodic load and speed variations

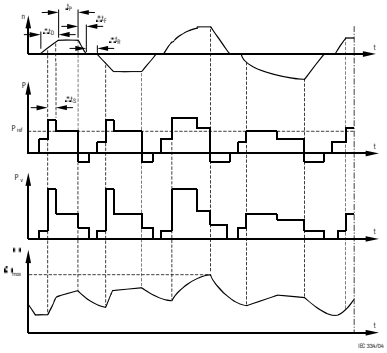

P	load	t	time
P_{ref}	reference load	t_D	starting/accelerating time
P_v	electrical losses	t_F	operation time at constant load
ϑ	temperature	t_P	time of electric braking
ϑ_{max}	maximum temperature attained	t_R	time de-energized and at rest
n	speed	t_G	time under overload

S10: Duty with discrete constant loads and speeds

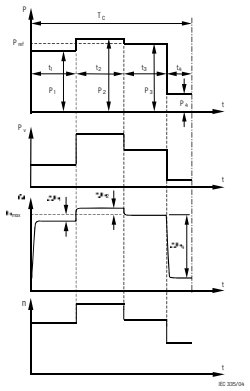

P	load	t	time
P_i	constant load within a load cycle	t_i	time of a constant load within a cycle
P_{ref}	reference load based on duty type S1	T_C	time of one load cycle
P_v	electrical losses	$\Delta\vartheta$	difference between the temperature rise of the winding at each of the various loads within one cycle and the temperature rise based on duty cycle S1 with reference load
ϑ	temperature		
ϑ_{ref}	temperature at reference load based on duty type S1	n	speed

The duty type of our standard motors is S1. On customer demand, the other duty type-motors can be produced.

INDUCTION MOTORS FED BY INVERTER

Due to its simple and rugged construction, low cost production and less maintenance requirements, squirrel cage induction motors are the most preferred type of the motor in the industry. In particular, technological developments and cost reduction in power electronics fields and also regulations on energy efficiency especially in HVAC industry, motivate the use of induction machine fed by inverters.

Important issues regarding the motor operation supplied by the inverter are listed below:

• The application should be compatible with the torque-speed curve of the selected motor and also continuous and maximum output current capability of the inverter. Please, get in contact with your inverter supplier regarding the normal duty and heavy duty operation based on your application.

• High switching frequency operation of the inverter imposes voltage stress on motor insulation. Please, get in contact with your motor supplier if your inverter switching frequency is higher than 5 kHz.

• High switching frequency improves the efficiency of the motor and also decreases the noise level, while decreases the inverter efficiency.

• Motor control modes of the inverter (Scalar or Vector) are chosen depending on the applications. Scalar control (U/f) is used mainly in applications like pump and fans where the requirements on speed accuracy and load dynamics, and starting torque are not so strict.

Vector control mode is used mainly in applications, where high starting torque, high accuracy on speed and the fast changes at load, prolonged low speed operation at load are required. Due to the control principle, vector control can provide higher torque for the same motor current and handle dynamic torque changes. In that sense, in case of operation by scalar control mode, inverter with a higher current rating is required, for the same application conditions.

• Beside the efficiency class of the motor, efficient operation of the motor is also dependent on the parameter settings of the inverter. (Motor control modes, switching frequency, braking methods, torque boost in Scalar control have the influence on efficient operation and thermal load of the motor.)

• Control methods used in speed sensor-less vector control may have varying performance, dependent on the motor design. Therefore, although using the same inverter, user may experience different performance at the motors produced by the different manufacturers.

• Identification of the motor equivalent circuit, which is part of the auto-tuning procedure of the inverter, is a critical setting which has influence on torque capability, speed accuracy, low and high speed performance and also efficient operation of the motor.

• Inverter suppliers may have different PWM Modulation methods which has especially influence on noise characteristics of the motor and other characteristics like inverter and motor efficiency and thermal behaviour as well.

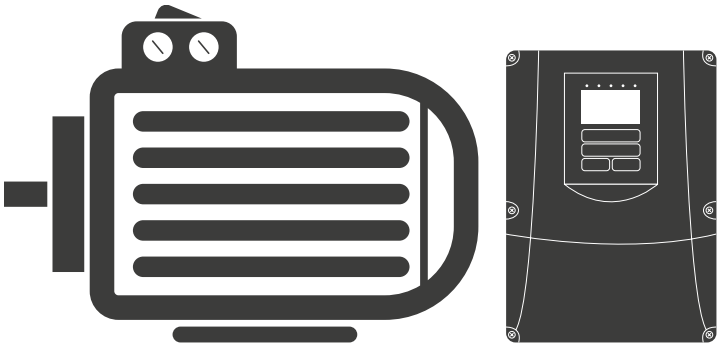

EFFICIENCY

European Committee of Manufacturers of Electrical Machines and Power Electronics (CEMEP) and European Commission issued a declaration on June 28, 1999 that categorized the motors in efficiency classes.

This standard covers 2, 4 and 6 pole motors in 0.12kW and 1000kW power range and 50-60Hz frequency and refers to IEC standard 60034-2-1 to define efficiency.

Efficiency is defined as the ratio of output power of the motor to the input power reflected in the cost and it is actually an indicator of losses.

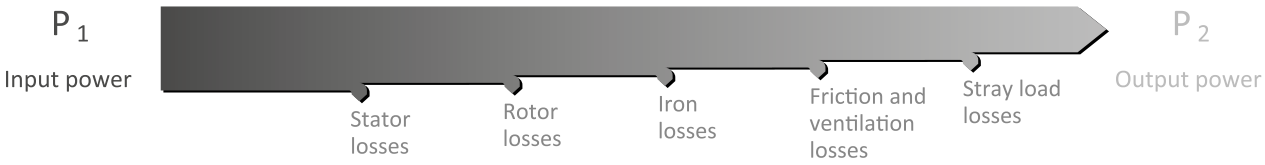

Commission Regulation EU 2019/1781, amendment (EU) 2021/341 had set new requirements for electric motors;

Latest Ecodesign Regulation (EU) 2019/1781 came into effect in October 2019 and it applies to low-voltage induction electric motors rated at less than 1,000 V alternating current (AC).
The regulation will be implemented in two steps starting on July 1, 2021.
The second stage, which expands the scope further and increases the requirements for motors on July 1, 2023.

July 1, 2021
The regulation covers 3-phase single-speed motors 50 Hz, 60 Hz, 50/60 Hz for direct-on-line operation with continuous duty defined as S3 ≥ 80% and S6 ≥ 80%.
Brake motors with external brake is also within the scope of new regulation.

Three phase motors with rated output ≥ 0,12 kW and < 0,75 kW: minimum IE2 efficiency level is mandatory.
Three phase motors with rated output ≥ 0,75 kW and ≤ 1 000 kW: minimum IE3 efficiency level is mandatory. Please also note that IE2 + VSD option is not allowed.

July 1, 2023
IE4 efficiency level mandatory for 3-phase motors: Rated output equal to or above 75 kW and equal or below 200 kW; with 2, 4 or 6 poles which are not brake motors nor Ex-motors.

IE3 requirements as from July 1, 2021.
Three phase motors with rated output ≥ 75 kW and ≤ 200 kW: minimum IE4 efficiency level is mandatory.
Single phase motors with rated output ≥ 0,12 kW and < 1000 kW: minimum IE2 efficiency level is mandatory.

According to EC No 640/2009 regulation, motor labels will include 50Hz and 60Hz motor data as well as IE codes and efficiency value. Most prominent feature of new labels is that 2D barcoding will be placed on the labels. This application ensures the customers to track the motors.

With barcoding, the motor users will be able to reach information such as manufacture date of motor, results of routine testing (current with neutral resistance, power etc.) and serial no. and etc.

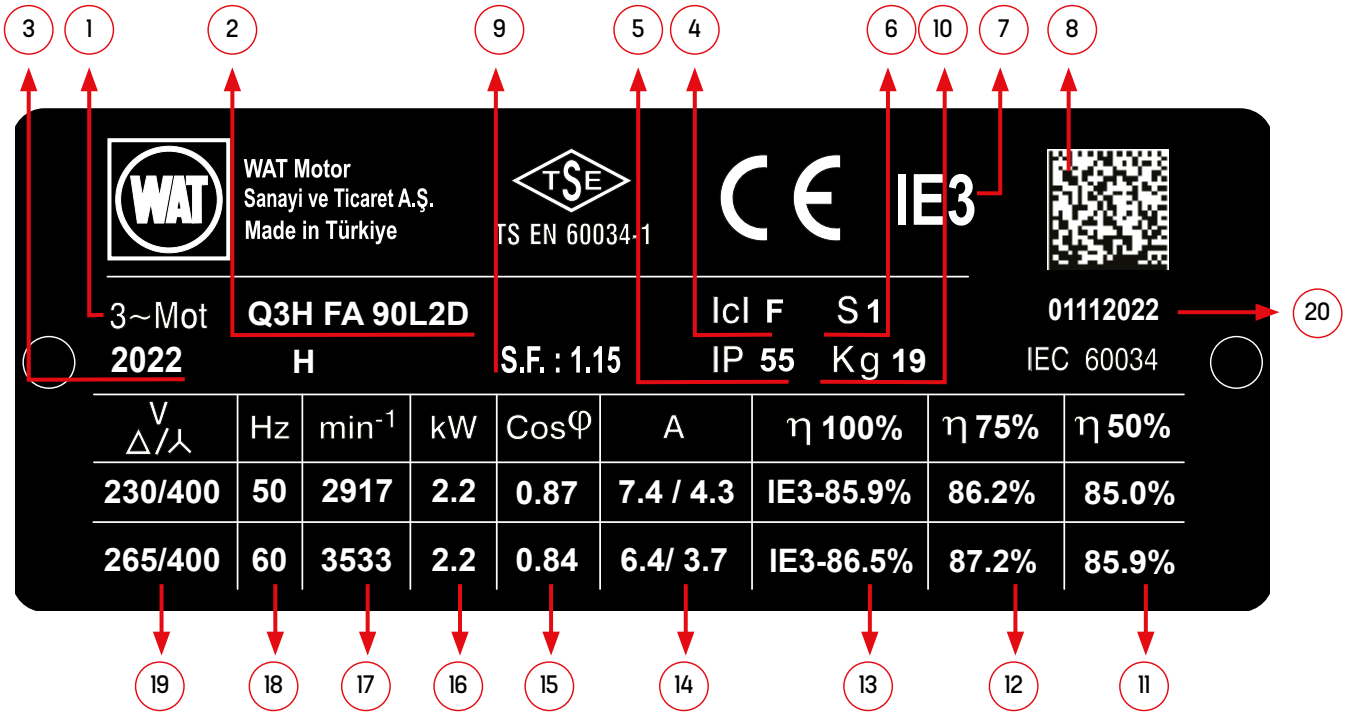

1 Motor type
2 Motor code
3 Year of manufacture
4 Insulation class
5 IP class
6 Service type
7 Efficiency class (acc. to IEC 60034-30)
8 2D Barcode
9 Service factor *
10 Motor weight
11 Efficiency value (acc. to IEC 60034-2-1)
12 Load value
13 Efficiency value (acc. to IEC 60034-2-1)
14 Nominal current
15 Power factor
16 Motor output power
17 Rated speed
18 Motor nominal frequency
19 Operation voltage
20 Production tracing number

* For IE2 and above efficiency (except 315 & 355 frame) motors, SF 1.15 is optional (with temperature rise F) for 315 & 355 frame motors.

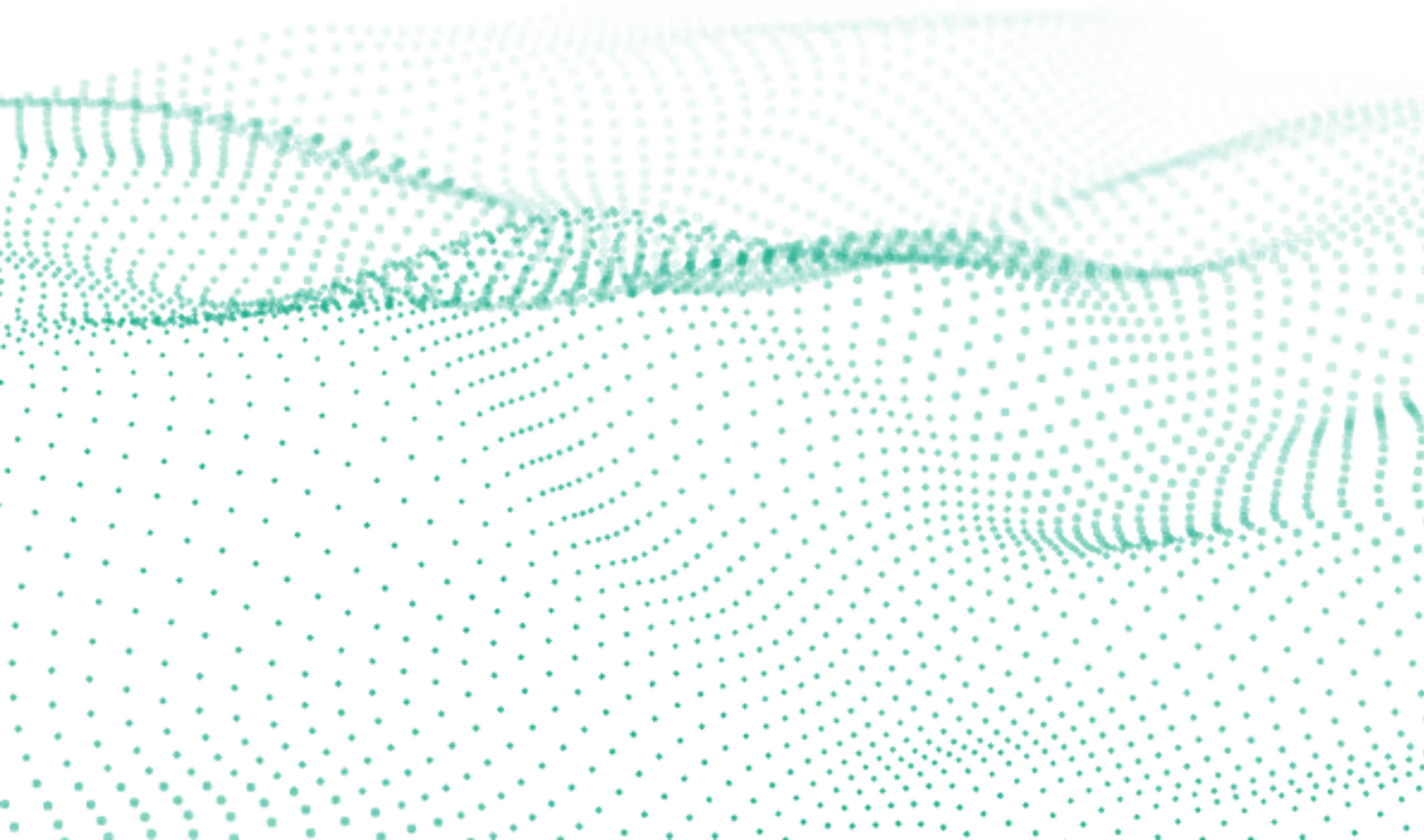

THREE PHASE ALUMINIUM MOTORS

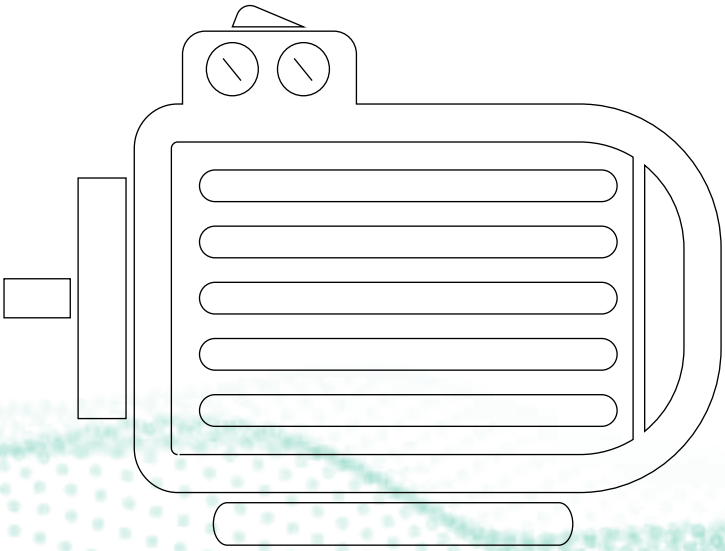

ELECTRICAL CHARACTERISTICS AT 50 Hz

	MOTOR TYPE	HOUSING TYPE	RATED VALUES					STARTING VALUES				Break-down Torque	EFFICIENCY*			Cosφ	J	Weight (B3)	Sound Pres-sure Level
			POWER		SPEED	CURRENT	TORQUE	CURRENT		TORQUE			η %						
								IA / IN		MA / MN									
			kW	HP	rpm	A	Nm	⅄	Δ	⅄	Δ	Mk/ Mn	4/4	3/4	2/4	4/4	kgm2	kg	dBA**
	2 poles 3000 rpm																		
230/400 V	Q4E63M2B	Aluminium	0,18	1/4	2870	0,8	0,6	6,9	-	3,5	-	3,7	70,8	69,6	63,9	0,80	0,00025	5,2	52
230/400 V	Q4E63M2C	Aluminium	0,25	1/3	2850	1,1	0,8	6,9	-	3,9	-	3,5	74,3	74,4	71,9	0,83	0,00028	6,0	53
230/400 V	Q4E71M2B	Aluminium	0,37	1/2	2855	1,5	1,2	7,6	-	4,6	-	4,5	78,1	76,3	71,9	0,80	0,00056	7,0	52
230/400 V	Q4E71M2C	Aluminium	0,55	3/4	2833	2,3	1,9	7,3	-	5,0	-	4,5	81,5	79,0	75,1	0,75	0,00067	7,5	54
230/400 V	Q4H80M2D	Aluminium	0,75	1	2898	2,6	2,5	9,8	-	4,2	-	4,4	83,5	84,2	82,0	0,85	0,00170	11,8	57
230/400 V	Q4H80M2DE	Aluminium	1,1	1,5	2915	4,1	3,6	12,0	-	6,1	-	5,8	85,2	83,7	80,6	0,80	0,00224	14,8	59
230/400 V	Q4H90L2D	Aluminium	1,5	2	2947	5,3	4,9	13,6	-	4,6	-	6,0	86,5	86,6	83,4	0,80	0,00283	18,5	61
230/400 V	Q4H90L2E	Aluminium	2,2	3	2925	7,3	7,2	11,4	-	3,8	-	4,7	88,0	89,2	88,1	0,84	0,00318	20,0	62
230/400 V	Q4H100L2D	Aluminium	3	4	2943	11,2	9,8	12,9	-	4,9	-	6,2	89,1	86,3	82,9	0,77	0,00536	25,0	63
400/690 V	Q4H112M2D	Aluminium	4	5,5	2934	7,3	13,0	4,2	12,5	1,3	4,0	5,5	90,0	89,9	88,5	0,89	0,00741	34,6	66
400/690 V	Q4H132S2D	Aluminium	5,5	7,5	2946	10,7	18,0	3,9	11,8	1,3	3,8	6,0	90,9	89,9	88,2	0,82	0,02948	53,2	69
400/690 V	Q4H132S2DE	Aluminium	7,5	10	2937	14,1	24,5	3,4	10,3	1,3	3,8	5,1	91,7	91,3	90,1	0,85	0,03326	58,5	70
400/690 V	Q4H160M2D	Aluminium	11	15	2975	21,6	35,1	4,7	14,0	1,6	4,8	7,0	92,6	92,3	90,3	0,78	0,04117	88,0	73
400/690 V	Q4H160M2DE	Aluminium	15	20	2968	28,7	48,8	4,2	12,6	1,4	4,1	6,1	93,3	93,1	91,9	0,82	0,04578	95,0	74
400/690 V	Q4H160L2D	Aluminium	18,5	25	2969	35,6	59,7	4,4	13,3	1,5	4,5	6,5	93,7	93,4	92,4	0,80	0,05575	105,5	74
400/690 V	Q4H180M2B	Aluminium	22	30	2970	37,6	71,0	4,3	13,0	1,3	3,9	5,2	94,0	94,0	93,1	0,90	0,09831	142,8	75
400/690 V	Q4H200L2D	Aluminium	30	40	2970	51,3	96,9	4,0	12,1	1,3	3,8	5,0	94,5	94,1	93,1	0,90	0,11383	166,0	76
400/690 V	Q4H200L2E	Aluminium	37	50	2973	63,4	118,9	4,4	13,3	1,3	3,9	6,8	94,8	94,7	93,9	0,89	0,14770	200,0	76
400/690 V	Q4H225M2D	Aluminium	45	65	2967	76,9	145,4	3,3	10,0	0,8	2,3	4,8	95,0	94,9	94,2	0,90	0,23500	240,0	80
400/690 V	Q4HG250M2D	Cast Iron	55	75	2980	91,4	117,1	3,8	11,4	0,9	2,8	5,8	95,3	94,7	93,7	0,91	0,54000	537,0	78
400/690 V	Q4HG280M2C	Cast Iron	75	100	2980	122,7	241,4	4,0	12,0	1,2	3,7	8,7	95,6	95,4	94,6	0,93	0,64500	656,0	80
400/690 V	Q4HG280M2D	Cast Iron	90	125	2987	158,6	287,5	4,2	12,5	1,2	3,5	4,8	95,8	94,3	92,8	0,86	0,70200	660,0	80
	4 poles 1500 rpm																		
230/400 V	Q4E63M4B	Aluminium	0,12	1/6	1410	0,7	0,8	4,2	-	3,1	-	3,3	69,8	64,6	57,9	0,64	0,00026	4,7	41
230/400 V	Q4E63M4C	Aluminium	0,18	1/4	1420	1,0	1,2	6,0	-	4,3	-	4,2	74,7	72,8	67,0	0,61	0,00030	5,7	43
230/400 V	Q4E71M4B	Aluminium	0,25	1/3	1443	1,3	1,7	5,6	-	3,2	-	3,6	77,9	73,5	67,8	0,64	0,00085	7,0	44
230/400 V	Q4E71M4C	Aluminium	0,37	1/2	1438	1,7	2,4	6,2	-	3,7	-	3,9	81,1	77,9	73,7	0,67	0,00119	9,3	45
230/400 V	Q4H80M4D	Aluminium	0,55	3/4	1463	2,4	3,6	8,1	-	3,7	-	4,6	83,9	81,5	77,7	0,71	0,00261	11,7	52
230/400 V	Q4H80M4E	Aluminium	0,75	1	1453	2,9	4,9	8,0	-	3,5	-	4,2	85,7	83,9	81,1	0,76	0,00306	13,9	52
230/400 V	Q4H90L4D	Aluminium	1,1	1,5	1461	5,0	7,2	8,7	-	5	-	5,4	87,2	85,5	81,5	0,64	0,00526	20,0	51
230/400 V	Q4H90L4DE	Aluminium	1,5	2	1460	6,1	9,8	10,8	-	5,4	-	5,9	88,2	86,7	83,4	0,71	0,00691	24,5	54
230/400 V	Q4H100L4D	Aluminium	2,2	3	1462	8,6	14,4	9,6	-	4	-	5,0	89,5	88,0	85,5	0,72	0,01059	29,8	56
230/400 V	Q4H100L4E	Aluminium	3	4	1453	6,4	19,7	8,6	-	3,3	-	4,1	90,4	89,4	87,9	0,76	0,01094	31,6	56
400/690 V	Q4H112M4E	Aluminium	4	5,5	1452	8,3	26,4	3,1	9,4	1,3	3,8	4,5	91,1	90,4	89,7	0,78	0,01527	40,0	57
400/690 V	Q4H132S4C	Aluminium	5,5	7,5	1478	12,0	35,6	3,4	10,1	1,2	3,5	5,1	91,9	91,2	89,9	0,73	0,03847	57,5	60
400/690 V	Q4H132M4DE	Aluminium	7,5	10	1473	14,6	48,6	3,4	10,1	0,7	2,0	4,5	92,6	92,0	91,1	0,81	0,05441	78,0	61
400/690 V	Q4H160M4D	Aluminium	11	15	1479	22,7	71,1	2,7	8,0	1,0	3,1	3,6	93,3	93,0	92,2	0,75	0,09146	99,5	62
400/690 V	Q4H160L4C	Aluminium	15	20	1478	33,7	97,0	2,6	7,7	1,1	3,3	4,0	93,9	93,1	92,1	0,69	0,105113	116,0	63
400/690 V	Q4H180L4B	Aluminium	18,5	25	1484	36,0	119,3	3,3	10,0	1,0	3,0	3,9	94,2	94,1	93,8	0,79	0,11398	154,0	67
400/690 V	Q4H180L4C	Aluminium	22	30	1487	44,7	141,5	3,5	10,5	1,1	3,2	4,6	94,5	94,0	92,8	0,76	0,22166	182,0	67
400/690 V	Q4H225M4D	Aluminium	37	50	1485	68,8	237,8	3,1	9,2	1,0	3,1	5,1	95,2	94,9	94,3	0,82	0,36400	246,0	71
400/690 V	Q4H225M4E	Aluminium	45	65	1482	88,5	290,1	2,9	8,6	1,0	3,1	5,0	95,4	94,9	94,4	0,78	0,43500	270,0	71
400/690 V	Q4HG250M4E	Cast Iron	55	75	1492	107,7	352,2	2,9	8,7	0,9	2,7	3,3	95,7	95,0	94,1	0,77	0,90800	531,0	72

* According to IEC 60034-2-1
** The sound pressure measurements are taken 1m away from the motor
** Tolerance +3 dBA

DIMENSION - B3

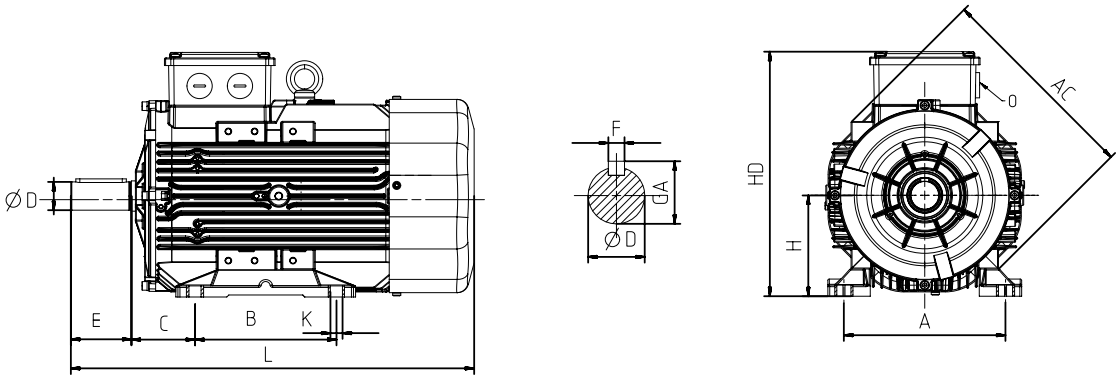

Power [kW]	Number of Poles	Motor Type	Housing Type	Main Dimensions			Foot Mounted Motors						Shaft				Bearing		Seal	
				AC	L	O	B	A	H	HD	K	C	D[1]	E	GA	F[2]	Drive Side	Non drive Side	Drive Side	Non drive side
0.12	4	Q4E63M4B	Aluminium	123	220	1xM20	80	100	63	162	7	40	11	23	12.5	4	6201-ZZ	6201-ZZ	12*22*7	12*22*7
0.18	2	Q4E63M2B	Aluminium	123	220	1xM20	80	100	63	162	7	40	11	23	12.5	4	6201-ZZ	6201-ZZ	12*22*7	12*22*7
0.18	4	Q4E63M4C	Aluminium	123	234	1xM20	80	100	63	162	7	40	11	23	12.5	4	6201-ZZ	6201-ZZ	12*22*7	12*22*7
0.25	2	Q4E63M2C	Aluminium	123	234	1xM20	80	100	63	162	7	40	11	23	12.5	4	6201-ZZ	6201-ZZ	12*22*7	12*22*7
0.25	4	Q4E71M4B	Aluminium	138	253	1xM20	90	112	71	190	7	45	14	30	16	5	6202-ZZ	6202-ZZ	15*24*5	15*24*5
0.37	2	Q4E71M2B	Aluminium	138	253	1xM20	90	112	71	190	7	45	14	30	16	5	6202-ZZ	6202-ZZ	15*24*5	15*24*5
0.37	4	Q4E71M4C	Aluminium	138	262	1xM20	90	112	71	190	7	45	14	30	16	5	6202-ZZ	6202-ZZ	15*24*5	15*24*5
0.55	2	Q4E71M2C	Aluminium	138	253	1xM20	90	112	71	190	7	45	14	30	16	5	6202-ZZ	6202-ZZ	15*24*5	15*24*5
0.55	4	Q4H80M4D	Aluminium	158	268	1xM20	100	125	80	216	10	50	19	40	21.5	6	6204-ZZ	6204-ZZ	20*30*7	20*30*7
0.75	2	Q4H80M2D	Aluminium	158	268	1xM20	100	125	80	216	10	50	19	40	21.5	6	6204-ZZ	6204-ZZ	20*30*7	20*30*7
0.75	4	Q4H80M4E	Aluminium	158	293	1xM20	100	125	80	216	10	50	19	40	21.5	6	6204-ZZ	6204-ZZ	20*30*7	20*30*7
1.1	2	Q4H80M2DE	Aluminium	158	293	1xM20	100	125	80	216	10	50	19	40	21.5	6	6204-ZZ	6204-ZZ	20*30*7	20*30*7
1.1	4	Q4H90L4D	Aluminium	172	344	1xM25	100-125	140	90	223	10	56	24	50	27	8	6305-ZZ	6205-ZZ	25*40*7	25*40*7
1.5	2	Q4H90L2D	Aluminium	172	344	1xM25	100-125	140	90	223	10	56	24	50	27	8	6305-ZZ	6205-ZZ	25*40*7	25*40*7
1.5	4	Q4H90L4DE	Aluminium	172	379	1xM25	100-125	140	90	223	10	56	24	50	27	8	6305-ZZ	6205-ZZ	25*40*7	25*40*7
2.2	2	Q4H90L2E	Aluminium	172	344	1xM25	100-125	140	90	223	10	56	24	50	27	8	6305-ZZ	6205-ZZ	25*40*7	25*40*7
2.2	4	Q4H100L4D	Aluminium	191	400	1xM25	140	160	100	243	12	63	28	60	31	8	6306-ZZ	6205-ZZ	30*47*7	30*47*7
3	2	Q4H100L2D	Aluminium	191	400	1xM25	140	160	100	243	12	63	28	60	31	8	6306-ZZ	6205-ZZ	30*47*7	30*47*7
3	4	Q4H100L4E	Aluminium	191	422	1xM25	140	160	100	243	12	63	28	60	31	8	6306-ZZ	6205-ZZ	30*47*7	30*47*7
4	2	Q4H112M2D	Aluminium	210	396	1xM25	140	190	112	265	12	70	28	60	31	8	6306-ZZ	6206-ZZ	30*47*7	30*47*7
4	4	Q4H112M4E	Aluminium	210	421	1xM25	140	190	112	266	12	70	28	60	31	8	6306-ZZ	6206-ZZ	30*47*7	30*47*7
5.5	2	Q4H132S2D	Aluminium	260	481	1xM32	140-178	216	132	328	12	89	38	80	41	10	6208-ZZ	6208-ZZ	40*62*10	40*62*10
5.5	4	Q4H132S4C	Aluminium	260	481	1xM32	140-178	216	132	328	12	89	38	80	41	10	6208-ZZ	6208-ZZ	40*62*10	40*62*10
7.5	2	Q4H132S2DE	Aluminium	260	481	1xM32	140-178	216	132	328	12	89	38	80	41	10	6208-ZZ	6208-ZZ	40*62*10	40*62*10
7.5	4	Q4H132M4DE	Aluminium	260	539	1xM32	140-178	216	132	328	12	89	38	80	41	10	6208-ZZ	6208-ZZ	40*62*10	40*62*10
11	2	Q4H160M2D	Aluminium	305	591	1xM32	210-254	254	160	378	14.5	108	42	110	45	12	6309-ZZ	6209-ZZ	45*72*10	45*72*10
11	4	Q4H160M4D	Aluminium	305	591	1xM32	210-254	254	160	378	14.5	108	42	110	45	12	6309-ZZ	6209-ZZ	45*72*10	45*72*10
15	2	Q4H160M2DE	Aluminium	305	591	1xM32	210-254	254	160	378	14.5	108	42	110	45	12	6309-ZZ	6209-ZZ	45*72*10	45*72*10
15	4	Q4H160L4C	Aluminium	305	622	1xM32	210-254	254	160	378	14.5	108	42	110	45	12	6309-ZZ	6209-ZZ	45*72*10	45*72*10
18.5	2	Q4H160L2D	Aluminium	-	591	1xM32	210-254	254	160	378	14.5	108	42	110	45	12	6309-ZZ	6209-ZZ	45*72*10	45*72*10
18.5	4	Q4H180L4B	Aluminium	349	696	1xM40	241-279	279	180	437	14.5	121	48	110	51.5	14	6310-ZZ	6310-ZZ	50*80*10	50*80*10
22	2	Q4H180M2B	Aluminium	349	696	1xM40	241-279	279	180	437	14.5	121	48	110	51.5	14	6310-ZZ	6310-ZZ	50*80*10	50*80*10
22	4	Q4H180L4C	Aluminium	349	750	1xM40	241-279	279	180	437	14.5	121	48	110	51.5	14	6310-ZZ	6310-ZZ	50*80*10	50*80*10
30	2	Q4H200L2D	Aluminium	349	706	1xM50	267-305	318	200	455	18.5	133	55	110	59	16	6312-ZZ	6310-ZZ	60*90*10	60*90*10
37	2	Q4H200L2E	Aluminium	349	759	1xM50	267-305	318	200	455	18.5	133	55	110	59	16	6312-ZZ	6310-ZZ	60*90*10	60*90*10
37	4	Q4H225M4D	Aluminium	456	765	1xM50	286-311	356	225	485	18.5	149	60	140	64	18	6313-ZZ	6313-ZZ	65*100*13	65*100*13
45	2	Q4H225M2D	Aluminium	456	735	1xM50	286-311	356	225	485	18.5	149	60	110	64	18	6313-ZZ	6313-ZZ	65*100*13	65*100*13
45	4	Q4H225M4E	Aluminium	456	765	1xM50	286-311	356	225	485	18.5	149	60	140	65	18	6313-ZZ	6313-ZZ	65*100*13	65*100*13
55	2	Q4HG250M2D	Cast Iron	489	893	1xM50	311-349	406	250	616	24	149	65	140	69	18	6316-Z	6316-Z	80*100*10	80*100*10
55	4	Q4HG250M4E	Cast Iron	489	893	1xM50	311-349	406	250	616	24	149	65	140	69	18	6316-Z	6316-Z	80*100*10	80*100*10
75	2	Q4HG280M2C	Cast Iron	489	1025	1xM50	368-419	457	280	610	24	190	65	140	69	18	6316-Z	6316-Z	80*100*10	80*100*10
90	2	Q4HG280M2D	Cast Iron	489	1025	1xM50	368-419	457	280	647	24	190	65	140	69	18	6316-Z	6316-Z	80*100*10	80*100*10

(1) Tolerance DIN EN 50347 “j6” up to 28mm, “k6” above 28mm
(2) According to DIN 6885

DIMENSION - B5, B35

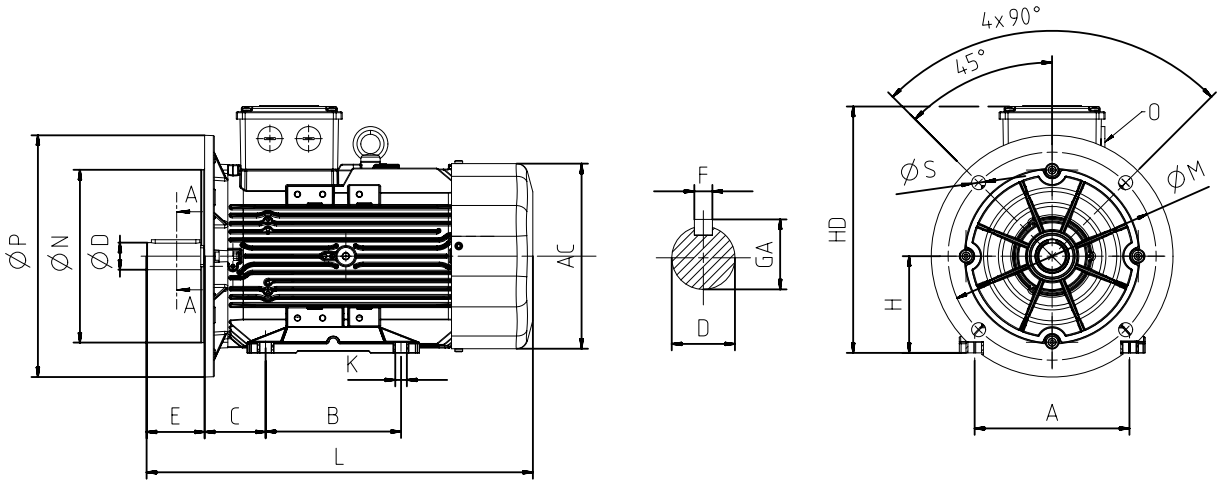

Power [kW]	Number of Poles	Motor Type	Housing Type	Main Dimensions			Foot Mounted Motors						Shaft				Bearing		Seal		Flange (FA B5, B35)				
				AC	L	O	B	A	H	HD	K	C	D[1]	E	GA	F[2]	Drive Side	Non drive Side	Drive Side	Non drive side	P	N[3]	M	R	S
0,12	4	Q4E63M4B	Aluminium	123	220	1xM20	80	100	63	162	7	40	11	23	12,5	4	6201-ZZ	6201-ZZ	12*22*7	12*22*7	140	95	115	-	10
0,18	2	Q4E63M2B	Aluminium	123	220	1xM20	80	100	63	162	7	40	11	23	12,5	4	6201-ZZ	6201-ZZ	12*22*7	12*22*7	140	95	115	-	10
0,18	4	Q4E63M4C	Aluminium	123	234	1xM20	80	100	63	162	7	40	11	23	12,5	4	6201-ZZ	6201-ZZ	12*22*7	12*22*7	140	95	115	-	10
0,25	2	Q4E63M2C	Aluminium	123	234	1xM20	80	100	63	162	7	40	11	23	12,5	4	6201-ZZ	6201-ZZ	12*22*7	12*22*7	140	95	115	-	10
0,25	4	Q4E71M4B	Aluminium	138	253	1xM20	90	112	71	190	7	45	14	30	16	5	6202-ZZ	6202-ZZ	15*24*5	15*24*5	160	110	130	-	10
0,37	2	Q4E71M2B	Aluminium	138	253	1xM20	90	112	71	190	7	45	14	30	16	5	6202-ZZ	6202-ZZ	15*24*5	15*24*5	160	110	130	-	10
0,37	4	Q4E71M4C	Aluminium	138	262	1xM20	90	112	71	190	7	45	14	30	16	5	6202-ZZ	6202-ZZ	15*24*5	15*24*5	160	110	130	-	10
0,55	2	Q4E71M2C	Aluminium	138	253	1xM20	90	112	71	190	7	45	14	30	16	5	6202-ZZ	6202-ZZ	15*24*5	15*24*5	160	110	130	-	10
0,55	4	Q4H80M4D	Aluminium	158	268	1xM20	100	125	80	216	10	50	19	40	21,5	6	6204-ZZ	6204-ZZ	20*30*7	20*30*7	200	130	165	-	12
0,75	2	Q4H80M2D	Aluminium	158	268	1xM20	100	125	80	216	10	50	19	40	21,5	6	6204-ZZ	6204-ZZ	20*30*7	20*30*7	200	130	165	-	12
0,75	4	Q4H80M4E	Aluminium	158	293	1xM20	100	125	80	216	10	50	19	40	21,5	6	6204-ZZ	6204-ZZ	20*30*7	20*30*7	200	130	165	-	12
1,1	2	Q4H80M2DE	Aluminium	158	293	1xM20	100	125	80	216	10	50	19	40	21,5	6	6204-ZZ	6204-ZZ	20*30*7	20*30*7	200	130	165	-	12
1,1	4	Q4H90L4D	Aluminium	172	344	1xM25	100-125	140	90	223	10	56	24	50	27	8	6305-ZZ	6205-ZZ	25*40*7	25*40*7	200	130	165	-	12
1,5	2	Q4H90L2D	Aluminium	172	344	1xM25	100-125	140	90	223	10	56	24	50	27	8	6305-ZZ	6205-ZZ	25*40*7	25*40*7	200	130	165	-	12
1,5	4	Q4H90L4DE	Aluminium	172	379	1xM25	100-125	140	90	223	10	56	24	50	27	8	6305-ZZ	6205-ZZ	25*40*7	25*40*7	200	130	165	-	12
2,2	2	Q4H90L2E	Aluminium	172	344	1xM25	100-125	140	90	223	10	56	24	50	27	8	6305-ZZ	6205-ZZ	25*40*7	25*40*7	200	130	165	-	12
2,2	4	Q4H100L4D	Aluminium	191	400	1xM25	140	160	100	243	12	63	28	60	31	8	6306-ZZ	6205-ZZ	30*47*7	30*47*7	250	180	215	-	14,5
3	2	Q4H100L2D	Aluminium	191	400	1xM25	140	160	100	243	12	63	28	60	31	8	6306-ZZ	6205-ZZ	30*47*7	30*47*7	250	180	215	-	14,5
3	4	Q4H100L4E	Aluminium	191	422	1xM25	140	160	100	243	12	63	28	60	31	8	6306-ZZ	6205-ZZ	30*47*7	30*47*7	250	180	215	-	14,5
4	2	Q4H112M2D	Aluminium	210	396	1xM25	140	190	112	265	12	70	28	60	31	8	6306-ZZ	6206-ZZ	30*47*7	30*47*7	250	180	215	-	14,5
4	4	Q4H112M4E	Aluminium	210	421	1xM25	140	190	112	266	12	70	28	60	31	8	6306-ZZ	6206-ZZ	30*47*7	30*47*7	250	180	215	-	14,5
5,5	2	Q4H132S2D	Aluminium	260	481	1xM32	140-178	216	132	328	12	89	38	80	41	10	6208-ZZ	6208-ZZ	40*62*10	40*62*10	300	230	265	-	14,5
5,5	4	Q4H132S4C	Aluminium	260	481	1xM32	140-178	216	132	328	12	89	38	80	41	10	6208-ZZ	6208-ZZ	40*62*10	40*62*10	300	230	265	-	14,5
7,5	2	Q4H132S2DE	Aluminium	260	481	1xM32	140-178	216	132	328	12	89	38	80	41	10	6208-ZZ	6208-ZZ	40*62*10	40*62*10	300	230	265	-	14,5
7,5	4	Q4H132M4DE	Aluminium	260	539	1xM32	140-178	216	132	328	12	89	38	80	41	10	6208-ZZ	6208-ZZ	40*62*10	40*62*10	300	230	265	-	14,5
11	2	Q4H160M2D	Aluminium	305	591	1xM32	210-254	254	160	378	14,5	108	42	110	45	12	6309-ZZ	6209-ZZ	45*72*10	45*72*10	350	250	300	-	18,5
11	4	Q4H160M4D	Aluminium	305	591	1xM32	210-254	254	160	378	14,5	108	42	110	45	12	6309-ZZ	6209-ZZ	45*72*10	45*72*10	350	250	300	-	18,5
15	2	Q4H160M2DE	Aluminium	305	591	1xM32	210-254	254	160	378	14,5	108	42	110	45	12	6309-ZZ	6209-ZZ	45*72*10	45*72*10	350	250	300	-	18,5
15	4	Q4H160L4C	Aluminium	305	622	1xM32	210-254	254	160	378	14,5	108	42	110	45	12	6309-ZZ	6209-ZZ	45*72*10	45*72*10	350	250	300	-	18,5
18,5	2	Q4H160L2D	Aluminium	"	591	1xM32	210-254	254	160	378	14,5	108	42	110	45	12	6309-ZZ	6209-ZZ	45*72*10	45*72*10	350	250	300	-	18,5
18,5	4	Q4H180L4B	Aluminium	349	696	1xM40	241-279	279	180	437	14,5	121	48	110	51,5	14	6310-ZZ	6310-ZZ	50*80*10	50*80*10	350	250	300	-	18,5
22	2	Q4H180M2B	Aluminium	349	696	1xM40	241-279	279	180	437	14,5	121	48	110	51,5	14	6310-ZZ	6310-ZZ	50*80*10	50*80*10	350	250	300	-	18,5
22	4	Q4H180L4C	Aluminium	349	750	1xM40	241-279	279	180	437	14,5	121	48	110	51,5	14	6310-ZZ	6310-ZZ	50*80*10	50*80*10	350	250	300	-	18,5
30	2	Q4H200L2D	Aluminium	349	706	1xM50	267-305	318	200	455	18,5	133	55	110	59	16	6312-ZZ	6310-ZZ	60*90*10	60*90*10	400	300	350	-	18,5
37	2	Q4H200L2E	Aluminium	349	759	1xM50	267-305	318	200	455	18,5	133	55	110	59	16	6312-ZZ	6310-ZZ	60*90*10	60*90*10	400	300	350	-	18,5
37	4	Q4H225M4D	Aluminium	456	765	1xM50	286-311	356	225	485	18,5	149	60	140	64	18	6313-ZZ	6313-ZZ	65*100*13	65*100*13	450	350	400	-	18,5
45	2	Q4H225M2D	Aluminium	456	735	1xM50	286-311	356	225	485	18,5	149	60	110	64	18	6313-ZZ	6313-ZZ	65*100*13	65*100*13	450	350	400	-	18,5
45	4	Q4H225M4E	Aluminium	456	765	1xM50	286-311	356	225	485	18,5	149	60	140	65	18	6313-ZZ	6313-ZZ	65*100*13	65*100*13	450	350	400	-	18,5
55	2	Q4HG250M2D	Cast Iron	489	893	1xM50	311-349	406	250	616	24	149	65	140	69	18	6316-Z	6316-Z	80*100*10	80*100*10	550	450	500	-	18,5
55	4	Q4HG250M4E	Cast Iron	489	893	1xM50	311-349	406	250	616	24	149	65	140	69	18	6316-Z	6316-Z	80*100*10	80*100*10	550	450	500	-	18,5
75	2	Q4HG280M2C	Cast Iron	489	1025	1xM50	368-419	457	280	610	24	190	65	140	69	18	6316-Z	6316-Z	80*100*10	80*100*10	550	450	500	-	18,5
90	2	Q4HG280M2D	Cast Iron	489	1025	1xM50	368-419	457	280	647	24	190	65	140	69	18	6316-Z	6316-Z	80*100*10	80*100*10	550	450	500	-	18,5

(1) Tolerance DIN EN 50347 "j6" up to 28mm, "k6" above 28mm
(2) According to DIN 6885
(3) Tolerance DIN EN 50347 "j6"

DIMENSION - B14a, B34a

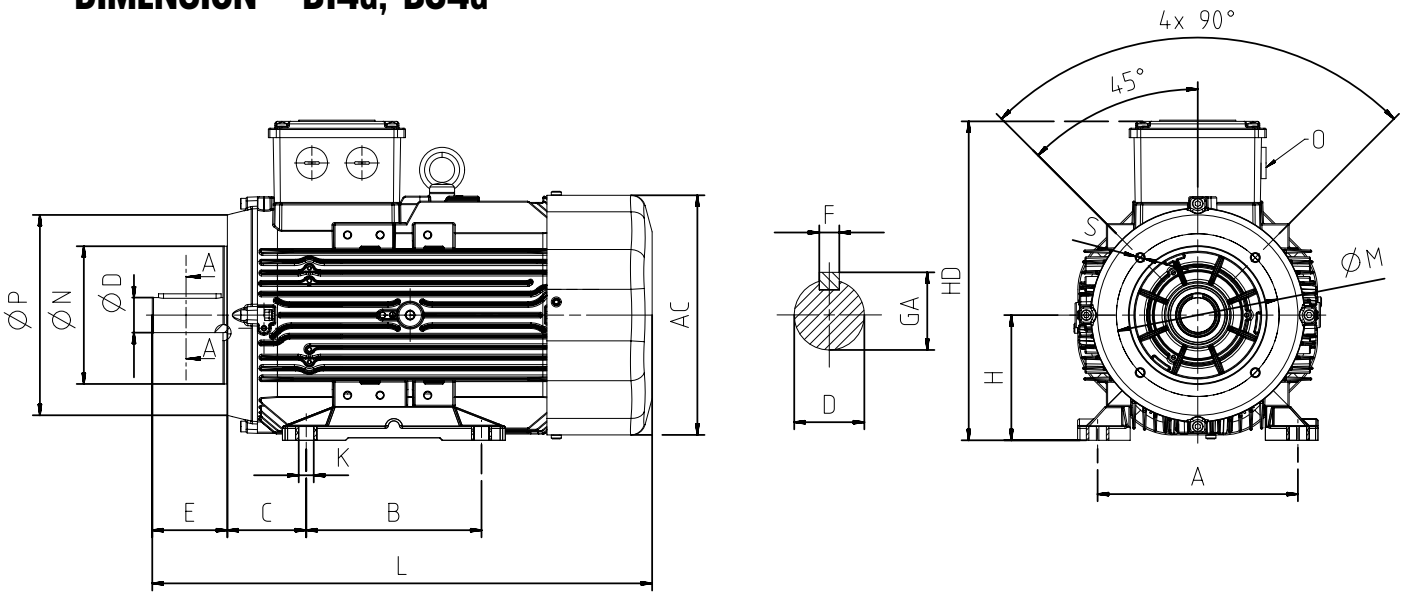

Power [kW]	Number of Poles	Motor Type	Housing Type	Main Dimensions			Foot Mounted Motors						Shaft				Bearing		Seal		Flange (FC B14a, B34a)				
				AC	L	O	B	A	H	HD	K	C	D[1]	E	GA	F[2]	Drive Side	Non drive Side	Drive Side	Non drive side	P	N[3]	M	R	S
0.12	4	Q4E63M4B	Aluminium	123	220	1xM20	80	100	63	162	7	40	11	23	12.5	4	6201-ZZ	6201-ZZ	12*22*7	12*22*7	90	60	75	-	M5
0.18	2	Q4E63M2B	Aluminium	123	220	1xM20	80	100	63	162	7	40	11	23	12.5	4	6201-ZZ	6201-ZZ	12*22*7	12*22*7	90	60	75	-	M5
0.18	4	Q4E63M4C	Aluminium	123	234	1xM20	80	100	63	162	7	40	11	23	12.5	4	6201-ZZ	6201-ZZ	12*22*7	12*22*7	90	60	75	-	M5
0.25	2	Q4E63M2C	Aluminium	123	234	1xM20	80	100	63	162	7	40	11	23	12.5	4	6201-ZZ	6201-ZZ	12*22*7	12*22*7	90	60	75	-	M5
0.25	4	Q4E71M4B	Aluminium	138	253	1xM20	90	112	71	190	7	45	14	30	16	5	6202-ZZ	6202-ZZ	15*24*5	15*24*5	105	70	85	-	M6
0.37	2	Q4E71M2B	Aluminium	138	253	1xM20	90	112	71	190	7	45	14	30	16	5	6202-ZZ	6202-ZZ	15*24*5	15*24*5	105	70	85	-	M6
0.37	4	Q4E71M4C	Aluminium	138	262	1xM20	90	112	71	190	7	45	14	30	16	5	6202-ZZ	6202-ZZ	15*24*5	15*24*5	105	70	85	-	M6
0.55	2	Q4E71M2C	Aluminium	138	253	1xM20	90	112	71	190	7	45	14	30	16	5	6202-ZZ	6202-ZZ	15*24*5	15*24*5	105	70	85	-	M6
0.55	4	Q4H80M4D	Aluminium	158	268	1xM20	100	125	80	216	10	50	19	40	21.5	6	6204-ZZ	6204-ZZ	20*30*7	20*30*7	120	80	100	-	M6
0.75	2	Q4H80M2D	Aluminium	158	268	1xM20	100	125	80	216	10	50	19	40	21.5	6	6204-ZZ	6204-ZZ	20*30*7	20*30*7	120	80	100	-	M6
0.75	4	Q4H80M4E	Aluminium	158	293	1xM20	100	125	80	216	10	50	19	40	21.5	6	6204-ZZ	6204-ZZ	20*30*7	20*30*7	120	80	100	-	M6
1.1	2	Q4H80M2DE	Aluminium	158	293	1xM20	100	125	80	216	10	50	19	40	21.5	6	6204-ZZ	6204-ZZ	20*30*7	20*30*7	120	80	100	-	M6
1.1	4	Q4H90L4D	Aluminium	172	344	1xM25	100-125	140	90	223	10	56	24	50	27	8	6305-ZZ	6205-ZZ	25*40*7	25*40*7	140	95	115	-	M8
1.5	2	Q4H90L2D	Aluminium	172	344	1xM25	100-125	140	90	223	10	56	24	50	27	8	6305-ZZ	6205-ZZ	25*40*7	25*40*7	140	95	115	-	M8
1.5	4	Q4H90L4DE	Aluminium	172	379	1xM25	100-125	140	90	223	10	56	24	50	27	8	6305-ZZ	6205-ZZ	25*40*7	25*40*7	140	95	115	-	M8
2.2	2	Q4H90L2E	Aluminium	172	344	1xM25	100-125	140	90	223	10	56	24	50	27	8	6305-ZZ	6205-ZZ	25*40*7	25*40*7	140	95	115	-	M8
2.2	4	Q4H100L4D	Aluminium	191	400	1xM25	140	160	100	243	12	63	28	60	31	8	6306-ZZ	6205-ZZ	30*47*7	30*47*7	160	110	130	-	M8
3	2	Q4H100L2D	Aluminium	191	400	1xM25	140	160	100	243	12	63	28	60	31	8	6306-ZZ	6205-ZZ	30*47*7	30*47*7	160	110	130	-	M8
3	4	Q4H100L4E	Aluminium	191	422	1xM25	140	160	100	243	12	63	28	60	31	8	6306-ZZ	6205-ZZ	30*47*7	30*47*7	160	110	130	-	M8
4	2	Q4H112M2D	Aluminium	210	396	1xM25	140	190	112	265	12	70	28	60	31	8	6306-ZZ	6206-ZZ	30*47*7	30*47*7	160	110	130	-	M8
4	4	Q4H112M4E	Aluminium	210	421	1xM25	140	190	112	266	12	70	28	60	31	8	6306-ZZ	6206-ZZ	30*47*7	30*47*7	160	110	130	-	M8
5.5	2	Q4H132S2D	Aluminium	260	481	1xM32	140-178	216	132	328	12	89	38	80	41	10	6208-ZZ	6208-ZZ	40*62*10	40*62*10	200	130	165	-	M10
5.5	4	Q4H132S4C	Aluminium	260	481	1xM32	140-178	216	132	328	12	89	38	80	41	10	6208-ZZ	6208-ZZ	40*62*10	40*62*10	200	130	165	-	M10
7.5	2	Q4H132S2DE	Aluminium	260	481	1xM32	140-178	216	132	328	12	89	38	80	41	10	6208-ZZ	6208-ZZ	40*62*10	40*62*10	200	130	165	-	M10
7.5	4	Q4H132M4DE	Aluminium	260	539	1xM32	140-178	216	132	328	12	89	38	80	41	10	6208-ZZ	6208-ZZ	40*62*10	40*62*10	200	130	165	-	M10

(1) Tolerance DIN EN 50347 “j6” up to 28mm, “k6” above 28mm
(2) According to DIN 6885
(3) Tolerance DIN EN 50347 "j6"

DIMENSION - B14b, B34b

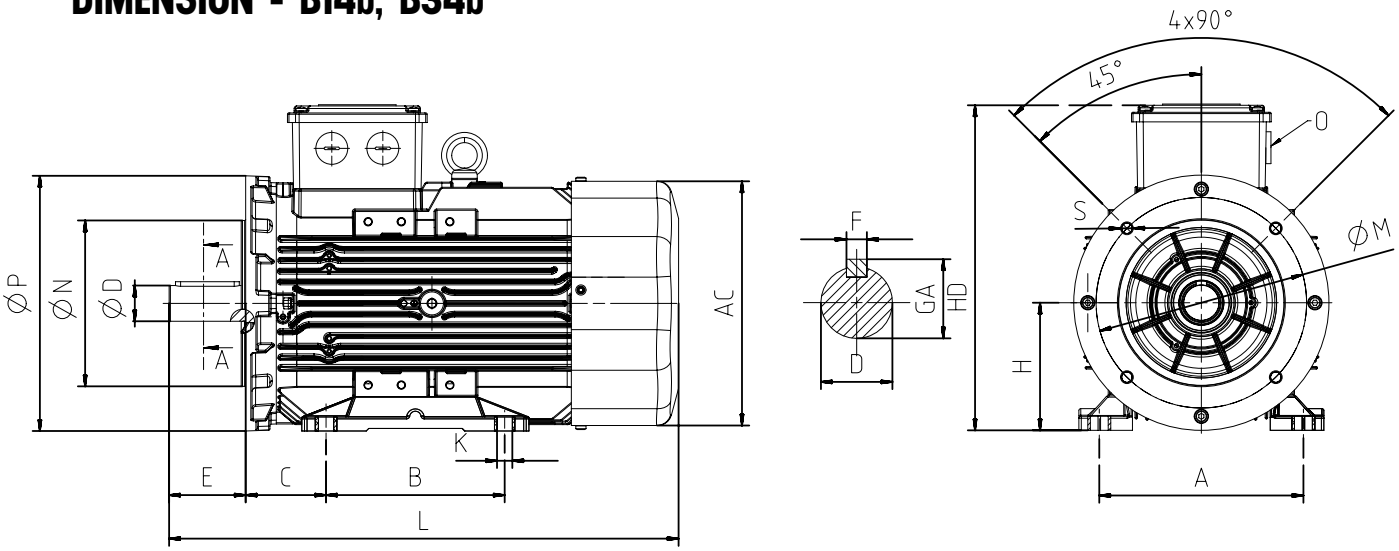

Power [kW]	Number of Poles	Motor Type	Housing Type	Main Dimensions			Foot Mounted Motors						Shaft				Bearing		Seal		Flange [FB B14b, B34b]				
				AC	L	O	B	A	H	HD	K	C	D[1]	E	GA	F[2]	Drive Side	Non drive Side	Drive Side	Non drive side	P	N[3]	M	R	S
0.12	4	Q4E63M4B	Aluminium	123	220	1xM20	80	100	63	162	7	40	11	23	12.5	4	6201-ZZ	6201-ZZ	12*22*7	12*22*7	120	80	100	-	M6
0.18	2	Q4E63M2B	Aluminium	123	220	1xM20	80	100	63	162	7	40	11	23	12.5	4	6201-ZZ	6201-ZZ	12*22*7	12*22*7	120	80	100	-	M6
0.18	4	Q4E63M4C	Aluminium	123	234	1xM20	80	100	63	162	7	40	11	23	12.5	4	6201-ZZ	6201-ZZ	12*22*7	12*22*7	120	80	100	-	M6
0.25	2	Q4E63M2C	Aluminium	123	234	1xM20	80	100	63	162	7	40	11	23	12.5	4	6201-ZZ	6201-ZZ	12*22*7	12*22*7	120	80	100	-	M6
0.25	4	Q4E71M4B	Aluminium	138	253	1xM20	90	112	71	190	7	45	14	30	16	5	6202-ZZ	6202-ZZ	15*24*5	15*24*5	140	95	115	-	M8
0.37	2	Q4E71M2B	Aluminium	138	253	1xM20	90	112	71	190	7	45	14	30	16	5	6202-ZZ	6202-ZZ	15*24*5	15*24*5	140	95	115	-	M8
0.37	4	Q4E71M4C	Aluminium	138	262	1xM20	90	112	71	190	7	45	14	30	16	5	6202-ZZ	6202-ZZ	15*24*5	15*24*5	140	95	115	-	M8
0.55	2	Q4E71M2C	Aluminium	138	253	1xM20	90	112	71	190	7	45	14	30	16	5	6202-ZZ	6202-ZZ	15*24*5	15*24*5	140	95	115	-	M8
0.55	4	Q4H80M4D	Aluminium	158	268	1xM20	100	125	80	216	10	50	19	40	21.5	6	6204-ZZ	6204-ZZ	20*30*7	20*30*7	160	110	130	-	M8
0.75	2	Q4H80M2D	Aluminium	158	268	1xM20	100	125	80	216	10	50	19	40	21.5	6	6204-ZZ	6204-ZZ	20*30*7	20*30*7	160	110	130	-	M8
0.75	4	Q4H80M4E	Aluminium	158	293	1xM20	100	125	80	216	10	50	19	40	21.5	6	6204-ZZ	6204-ZZ	20*30*7	20*30*7	160	110	130	-	M8
1.1	2	Q4H80M2DE	Aluminium	158	293	1xM20	100	125	80	216	10	50	19	40	21.5	6	6204-ZZ	6204-ZZ	20*30*7	20*30*7	160	110	130	-	M8
1.1	4	Q4H90L4D	Aluminium	172	344	1xM25	100-125	140	90	223	10	56	24	50	27	8	6305-ZZ	6205-ZZ	25*40*7	25*40*7	160	110	130	-	M8
1.5	2	Q4H90L2D	Aluminium	172	344	1xM25	100-125	140	90	223	10	56	24	50	27	8	6305-ZZ	6205-ZZ	25*40*7	25*40*7	160	110	130	-	M8
1.5	4	Q4H90L4DE	Aluminium	172	379	1xM25	100-125	140	90	223	10	56	24	50	27	8	6305-ZZ	6205-ZZ	25*40*7	25*40*7	160	110	130	-	M8
2.2	2	Q4H90L2E	Aluminium	172	344	1xM25	100-125	140	90	223	10	56	24	50	27	8	6305-ZZ	6205-ZZ	25*40*7	25*40*7	160	110	130	-	M8
2.2	4	Q4H100L4D	Aluminium	191	400	1xM25	140	160	100	243	12	63	28	60	31	8	6306-ZZ	6205-ZZ	30*47*7	30*47*7	200	130	165	-	M10
3	2	Q4H100L2D	Aluminium	191	400	1xM25	140	160	100	243	12	63	28	60	31	8	6306-ZZ	6205-ZZ	30*47*7	30*47*7	200	130	165	-	M10
3	4	Q4H100L4E	Aluminium	191	422	1xM25	140	160	100	243	12	63	28	60	31	8	6306-ZZ	6205-ZZ	30*47*7	30*47*7	200	130	165	-	M10
4	2	Q4H112M2D	Aluminium	210	396	1xM25	140	190	112	265	12	70	28	60	31	8	6306-ZZ	6206-ZZ	30*47*7	30*47*7	200	130	165	-	M10
4	4	Q4H112M4E	Aluminium	210	421	1xM25	140	190	112	266	12	70	28	60	31	8	6306-ZZ	6206-ZZ	30*47*7	30*47*7	200	130	165	-	M10
5.5	2	Q4H132S2D	Aluminium	260	481	1xM32	140-178	216	132	328	12	89	38	80	41	10	6208-ZZ	6208-ZZ	40*62*10	40*62*10	250	180	215	-	M12
5.5	4	Q4H132S4C	Aluminium	260	481	1xM32	140-178	216	132	328	12	89	38	80	41	10	6208-ZZ	6208-ZZ	40*62*10	40*62*10	250	180	215	-	M12
7.5	2	Q4H132S2DE	Aluminium	260	481	1xM32	140-178	216	132	328	12	89	38	80	41	10	6208-ZZ	6208-ZZ	40*62*10	40*62*10	250	180	215	-	M12
7.5	4	Q4H132M4DE	Aluminium	260	539	1xM32	140-178	216	132	328	12	89	38	80	41	10	6208-ZZ	6208-ZZ	40*62*10	40*62*10	250	180	215	-	M12

(1) Tolerance DIN EN 50347 “j6” up to 28mm, “k6” above 28mm
(2) According to DIN 6885
(3) Tolerance DIN EN 50347 “j6”

IE3

ELECTRICAL CHARACTERISTICS AT 50 Hz

	SIZE	MOTOR TYPE	HOUSING TYPE	RATED VALUES POWER kW	RATED VALUES POWER HP	RATED VALUES SPEED rpm	RATED VALUES CURRENT A	RATED VALUES TORQUE Nm	STARTING VALUES CURRENT I_A / I_N λ	STARTING VALUES CURRENT I_A / I_N Δ	STARTING VALUES TORQUE M_A / M_N λ	STARTING VALUES TORQUE M_A / M_N Δ	Break-down Torque Ratio Mk/ Mn	EFFICIENCY * η % 4/4	EFFICIENCY * η % 3/4	EFFICIENCY * η % 2/4	Cosφ 4/4	J kgm²	Weight [B3] kg	Sound Pressure Level dBA **
		2 pole 3000 rpm																		
230/400V		Q3H80M2C	Aluminium	0.75	1.0	2890	1.6	2.5	8.3	-	3.7	-	4.2	80.7	79.8	76.1	0.85	0.0014	13	57
		Q3H80M2D	Aluminium	1.1	1.5	2890	2.3	3.6	9.1	-	3.9	-	4.3	82.7	82.2	79.3	0.85	0.0017	13	57
	C	Q3H80M2DE	Aluminium	1.5	2.0	2905	3.2	4.9	10.9	-	5	-	5.4	84.2	83.3	80.5	0.80	0.00224	15	59
		Q3HS90S2C	Aluminium	1.5	2.0	2910	3.3	4.9	10.9	-	5.2	-	5.4	84.2	83.3	80.5	0.80	0.0023	16	62
		Q3H90L2D	Aluminium	2.2	3.0	2917	4.3	7.2	9.2	-	3.1	-	4.9	85.9	86.4	85.2	0.87	0.0028	19	62
	C	Q3H90L2E	Aluminium	3.0	4.0	2890	5.8	9.9	8.1	-	3	-	3.5	87.1	88.1	87.7	0.86	0.00318	19	63
		Q3HS100L2C	Aluminium	3.0	4.0	2890	5.9	9.9	8.1	-	3.2	-	3.5	87.1	88.1	87.7	0.85	0.0031	25	66
400/690V	C	Q3H100L2DE	Aluminium	4.0	5.5	2936	8.0	13.0	3.6	10.9	1.6	4.8	5.7	88.1	88.1	85.8	0.82	0.00611	29	66
		Q3HS112M2C	Aluminium	4.0	5.5	2936	7.5	13.0	3.6	10.9	1.6	4.8	5.7	88.1	88.1	85.8	0.85	0.0064	29	68
	SC	Q3H100L2E	Aluminium	5.5	7.5	2933	10.9	18.0	4.4	13.2	1.7	5.0	5.9	89.2	88.6	86.7	0.83	0.00612	35	66
	C	Q3H112M2D	Aluminium	5.5	7.5	2920	10.5	18.1	3.5	10.5	1.2	3.7	5.1	89.2	89.0	87.2	0.86	0.00741	32	68
		Q3HS132S2C	Aluminium	5.5	7.5	2918	10.5	18.0	3.6	10.7	1.2	3.7	5.1	89.2	89.0	87.2	0.86	0.0077	37	69
	C	Q3H112M2DE	Aluminium	7.5	10.0	2918	13.6	24.5	3.6	10.7	1.4	4.3	5.4	90.1	90.3	89.1	0.88	0.00921	42	69
		Q3HS132S2D	Aluminium	7.5	10.0	2918	13.9	24.5	3.6	10.8	1.4	4.3	5.4	90.1	90.3	89.1	0.88	0.0093	43	69
	C	Q3H132M2A	Aluminium	11.0	15.0	2925	20.7	36.0	3.5	10.5	1.3	3.9	5.2	91.2	91.4	90.6	0.85	0.03489	61	69
		Q3HS160M2D	Aluminium	11.0	15.0	2925	20.7	36.0	3.5	10.5	1.3	3.9	5.2	91.2	91.4	90.6	0.85	0.0352	65	70
	C	Q3H132M2B	Aluminium	15.0	20.0	2935	27.6	48.8	3.5	10.4	1.2	3.7	5.2	91.9	91.3	89.8	0.86	0.00402	77	71
		Q3HS160M2DE	Aluminium	15.0	20.0	2930	27.9	48.9	3.5	10.5	1.2	3.7	5.2	91.9	91.3	89.8	0.84	0.0402	79	71
		Q3H160L2C	Aluminium	18.5	25.0	2960	32.8	59.9	3.6	10.8	1.1	3.4	4.8	92.4	92.5	91.6	0.89	0.0481	96	70
	C	Q3H160L2D	Aluminium	22.0	30.0	2961	39.1	71.0	3.5	10.6	1.2	3.6	5.1	92.7	92.4	91.3	0.87	0.05539	114	70
		Q3HS180M2B	Aluminium	22.0	30.0	2961	39.1	70.7	3.5	10.5	1.1	3.2	5.2	92.7	92.5	91.3	0.87	0.0587	114	77
	C	Q3H180M2B	Aluminium	30.0	40.0	2957	50.1	96.9	3.2	9.6	1.0	2.9	3.9	93.3	93.2	92.6	0.93	0.10277	148	77
		Q3H200L2C	Aluminium	30.0	40.0	2955	50.3	97.0	3.5	10.5	1.0	3.0	4.5	93.3	93.2	92.2	0.92	0.1028	153	78
		Q3H200L2D	Aluminium	37.0	50.0	2960	61.9	119.4	3.3	9.9	1.0	2.9	4.4	93.7	94.4	94.0	0.92	0.1138	166	78
	SC	Q3H180L2DE	Aluminium	45.0	60	2964	74.4	145.0	3.6	10.7	1	3.0	3.9	94	93.3	92.8	0.92	0.10277	199	77
	C	Q3H200L2DE	Aluminium	45.0	60.0	2964	75.2	145.0	3.6	10.7	1.0	3.0	2.7	94.0	93.3	92.8	0.92	0.14769	199	78
		Q3E225M2B	Aluminium	45.00	60	2976	78.8	145.0	3.8	11.5	1.2	3.6	5.2	94.0	93.7	93.3	0.89	0.21100	218	80
		Q3E250M2B	Aluminium	55.00	75	2973	98.4	176.5	3.9	11.6	1.2	3.7	7.0	94.3	93.8	92.5	0.86	0.22700	247	81
		4 pole 1500 rpm																		
230/400V		Q3H80M4D	Aluminium	0.75	1.0	1445	1.7	5.0	6.7	-	2.8	-	3.4	82.5	83.2	80.6	0.77	0.00261	13	52
	C	Q3H80M4DE	Aluminium	1.1	1.5	1448	2.6	7.3	7.2	-	3.1	-	3.7	82.7	82.4	89.5	0.75	0.00306	14	48
		Q3HS90S4C	Aluminium	1.1	1.5	1447	2.6	7.3	7.2	-	3.1	-	3.7	82.7	82.4	89.5	0.74	0.00328	15	54
		Q3H90L4D	Aluminium	1.5	2.0	1449	3.5	9.9	8.1	-	3.6	-	4.2	85.3	85.0	82.1	0.76	0.00526	20	53
	C	Q3H90L4DE	Aluminium	2.2	3.0	1453	5.4	14.4	9.5	-	5.0	-	5.5	86.7	84.3	80.6	0.68	0.00690	25	54
		Q3HS100L4C	Aluminium	2.2	3.0	1443	4.9	14.6	9.5	-	5.0	-	5.5	86.7	84.3	80.6	0.75	0.00690	25	55
		Q3H100L4D	Aluminium	3.0	4.0	1446	6.2	19.9	8.4	-	3.3	-	3.8	87.7	88.0	87.0	0.81	0.01059	31	56
400/690V	C	Q3H100L4E	Aluminium	4.0	5.5	1445	8.8	26.4	8.6	-	3.5	-	4.2	88.6	87.1	85.6	0.75	0.01124	35	56
		Q3H112M4D	Aluminium	4.0	5.5	1452	8.2	26.5	3.0	9.1	1.1	3.3	4.1	88.6	88.8	87.3	0.80	0.01383	32	54
	C	Q3H112M4E	Aluminium	5.5	7.5	1443	11.25	36.4	2.8	8.3	1.0	3.1	3.8	89.6	89.2	88.3	0.80	0.01526	40	57
		Q3H132S4B	Aluminium	5.5	7.5	1467	10.6	35.8	2.8	8.5	0.7	2.0	3.8	89.6	89.1	87.6	0.84	0.03560	53	60
		Q3H132M4D	Aluminium	7.5	10.0	1467	15.2	48.8	2.7	8.2	0.8	2.3	3.8	90.4	90.7	89.6	0.80	0.04030	58	60
	C	Q3H112M4E	Aluminium	5.5	7.5	1443	11.25	36.4	2.8	8.3	1.0	3.1	3.8	89.6	89.2	88.3	0.80	0.01526	40	57
		Q3HS160M4C	Aluminium	11.0	15.0	1470	21.0	71.3	2.7	8.0	0.7	2.1	3.8	91.4	91.5	90.4	0.83	0.05940	84	63
		Q3H160L4B	Aluminium	15.0	20.0	1477	30.9	97.1	2.6	7.8	0.9	2.8	3.3	92.1	92.0	90.8	0.76	0.09005	101	62
	C	Q3H160L4C	Aluminium	18.5	25.0	1474	39.5	119.9	2.5	7.4	0.8	2.3	3.5	92.6	91.9	91.2	0.74	0.10511	114	58
		Q3HS180M4B	Aluminium	18.5	25.0	1474	39.5	119.9	2.5	7.4	0.8	2.3	3.5	92.6	91.9	91.2	0.74	0.11398	118	67
		Q3H180L4B	Aluminium	22.0	30.0	1485	41.6	141.7	3.1	9.2	0.9	2.8	3.6	93.0	93.1	92.3	0.83	0.18660	158	68
	C	Q3H180L4C	Aluminium	30.0	40.0	1475	54.8	194.2	2.5	7.6	0.8	2.3	2.8	93.6	93.2	92.3	0.85	0.22165	187	69
		Q3H200L4D	Aluminium	30.0	40.0	1475	54.8	195.5	2.7	8.0	0.8	2.5	3.1	93.6	94.6	94.8	0.85	0.22166	194	68
		Q3E225S4B	Aluminium	37.00	50	1484	72.3	238.6	2.9	8.7	1.0	3.1	4.6	93.9	93.2	91.9	0.79	0.35800	225	71
		Q3E225M4C	Aluminium	45.00	60	1483	86.9	289.5	2.8	8.4	1.0	2.9	4.8	94.2	93.7	92.8	0.81	0.39700	250	71
		Q3E250M4B	Aluminium	55.00	75	1475	106.2	357.4	2.4	7.2	0.9	2.7	4.3	94.6	94.9	94.6	0.80	0.45600	278	72

* According to IEC 60034-2-1
** The sound pressure measurements are taken 1m away from the motor
** Tolerance +3 dBA

	MOTOR TYPE	HOUSING TYPE	RATED VALUES					STARTING VALUES				Break-down Torque Ratio	EFFICIENCY *			Cosφ	J	Weight (B3)	Sound Pressure Level dBA **
			POWER		SPEED	CURRENT	TORQUE	CURRENT		TORQUE			η %						
								I_A / I_N		M_A / M_N									
			kW	HP	rpm	A	Nm	λ	Δ	λ	Δ	Mk/ Mn	4/4	3/4	2/4	4/4	kgm²	kg	
	6 pole 1000 rpm																		
230/400V	Q3H90L6C	Aluminium	0,75	1,0	950	2,1	7,6	4,9	-	2,5	-	3,0	78,9	78,4	74,9	0,67	0,00460	18	53
230/400V	Q3H90L6D	Aluminium	1,1	1,5	950	3,0	11,1	4,5	-	2,6	-	2,9	81,0	80,6	78,3	0,67	0,00528	20	53
230/400V	Q3H100L6D	Aluminium	1,5	2,0	960	4,1	14,9	4,8	-	2,6	-	3,0	82,5	81,7	78,2	0,65	0,01059	26	55
230/400V	Q3H112M6D	Aluminium	2,2	3,0	957	5,2	22,0	4,9	-	2,7	-	3,0	84,3	84,6	83,7	0,71	0,01383	32	57
400/690V	Q3H132S6A	Aluminium	3,0	4,0	978	7,3	29,3	1,9	5,7	0,6	2,0	2,5	85,6	85,2	82,8	0,68	0,03560	53	61
400/690V	Q3H132M6A	Aluminium	4,0	5,5	975	9,1	39,2	2,0	6,0	0,7	2,2	2,6	86,8	85,7	82,8	0,72	0,04030	58	60
400/690V	Q3H132M6B	Aluminium	5,5	7,5	971	12,0	54,1	2,1	6,3	0,7	2,1	2,6	88,0	87,6	85,3	0,75	0,05940	82	60
400/690V	Q3H160M6C	Aluminium	7,5	10,0	976	16,5	73,4	2,0	6,0	0,7	2,2	3,0	89,1	89,0	88,0	0,73	0,07540	88	62
400/690V	Q3H160L6D	Aluminium	11,0	15,0	974	24,2	107,8	2,1	6,3	0,7	2,2	3,0	90,3	90,1	89,3	0,73	0,09000	101	62
400/690V	Q3H180L6B	Aluminium	15,0	20,0	980	32,2	146,2	2,2	6,6	0,7	2,1	2,9	91,2	90,9	88,7	0,75	0,18660	155	68
400/690V	Q3H200L6C	Aluminium	18,5	25,0	981	40,3	180,1	2,3	6,9	0,6	1,9	2,7	91,7	91,6	91,3	0,72	0,23286	194	69
400/690V	Q3H200L6D	Aluminium	22,0	30,0	982	50,5	213,9	2,9	5,0	0,6	1,9	2,2	92,2	92,2	91,6	0,69	0,22166	193	69
400/690V	Q3E225M6C	Aluminium	30,0	40,0	975	59,1	293,8	1,9	6,1	0,6	1,8	2,5	92,9	92,8	91,8	0,80	0,52900	238	71

* According to IEC 60034-2-1
** The sound pressure measurements are taken 1m away from the motor
** Tolerance +3 dBA

DIMENSION - B3

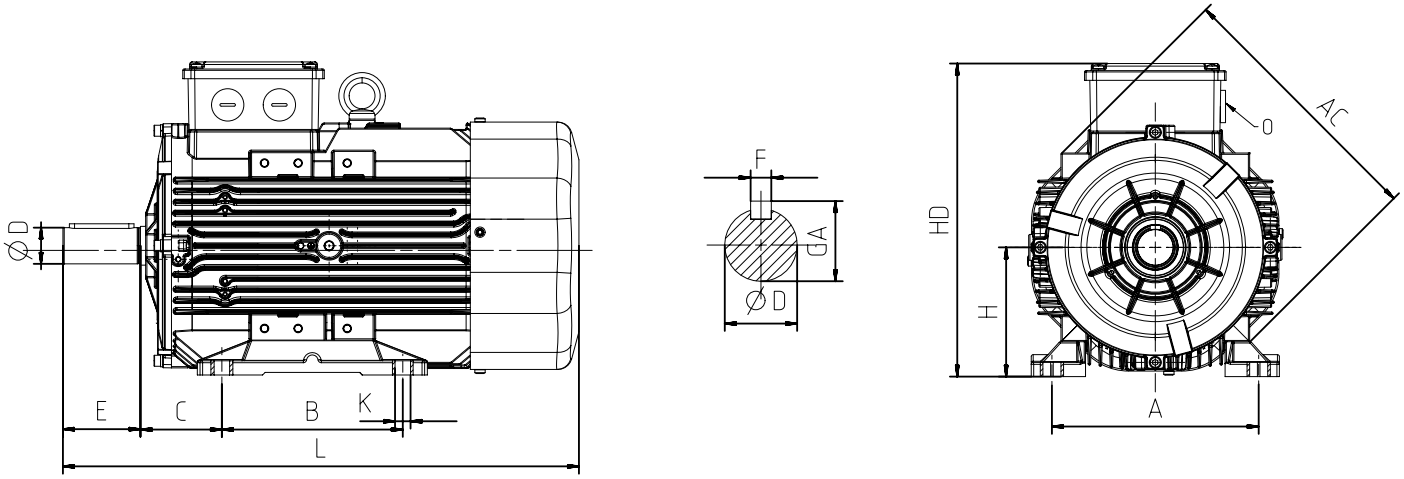

					Main Dimensions			Foot Mounted Motors						Shaft				Bearing		Seal	
SIZE	Power [kW]	Number of Poles	Motor Type	Housing Type	AC	L	O	B	A	H	HD	K	C	D[1]	E	GA	F[2]	Drive Side	Non drive Side	Drive Side	Non drive Side
	0,75	2	Q3H80M2C	Aluminium	158	268	1xM20	100	125	80	216	10	50	19	40	21,5	6	6204-ZZ	6204-ZZ	20*30*7	20*30*7
	0,75	4	Q3H80M4D	Aluminium	158	268	1xM20	100	125	80	216	10	50	19	40	21,5	6	6204-ZZ	6204-ZZ	20*30*7	20*30*7
	0,75	6	Q3H90L6C	Aluminium	172	344	1xM25	100-125	140	90	223	10	56	24	50	27	8	6305-ZZ	6205-ZZ	25*40*7	25*40*7
	1,1	2	Q3H80M2D	Aluminium	158	268	1xM20	100	125	80	216	10	50	19	40	21,5	6	6204-ZZ	6204-ZZ	20*30*7	20*30*7
C	1,1	4	Q3H80M4DE	Aluminium	158	268	1xM20	100	125	80	216	10	50	19	40	21,5	6	6204-ZZ	6204-ZZ	20*30*7	20*30*7
	1,1	4	Q3HS90S4C	Aluminium	158	303	1xM25	100-125	140	90	213	10	56	24	50	27	8	6305-ZZ	6204-ZZ	25*40*7	20*30*7
	1,1	6	Q3H90L6D	Aluminium	172	344	1xM25	100-125	140	90	223	10	56	24	50	27	8	6305-ZZ	6205-ZZ	25*40*7	25*40*7
C	1,5	2	Q3H80M2DE	Aluminium	158	268	1xM20	100	125	80	216	10	50	19	40	21,5	6	6204-ZZ	6204-ZZ	20*30*7	20*30*7
	1,5	2	Q3HS90S2C	Aluminium	158	303	1xM25	100-125	140	90	213	10	56	24	50	27	8	6305-ZZ	6204-ZZ	25*40*7	20*30*7
	1,5	4	Q3H90L4D	Aluminium	172	344	1xM25	100-125	140	90	223	10	56	24	50	27	8	6305-ZZ	6205-ZZ	25*40*7	25*40*7
	1,5	6	Q3H100L6D	Aluminium	191	400	1xM25	140	160	100	243	12	63	28	60	31	8	6306-ZZ	6205-ZZ	30*47*7	30*47*7
	2,2	2	Q3H90L2D	Aluminium	172	344	1xM25	100-125	140	90	223	10	56	24	50	27	8	6305-ZZ	6205-ZZ	25*40*7	25*40*7
C	2,2	4	Q3H90L4DE	Aluminium	172	344	1xM25	100-125	140	90	223	10	56	24	50	27	8	6305-ZZ	6205-ZZ	25*40*7	25*40*7
	2,2	4	Q3HS100L4C	Aluminium	172	384	1xM25	140	160	100	233	12	63	28	60	31	8	6306-ZZ	6205-ZZ	30*47*7	25*40*7
	2,2	6	Q3H112M6D	Aluminium	210	396	1xM25	140	190	112	265	12	70	28	60	31	8	6306-ZZ	6206-ZZ	30*47*7	30*47*7
C	3	2	Q3H90L2E	Aluminium	172	344	1xM25	100-125	140	90	223	10	56	24	50	27	8	6305-ZZ	6205-ZZ	25*40*7	25*40*7
	3	2	Q3HS100L2C	Aluminium	172	349	1xM25	140	160	100	233	12	63	28	60	31	8	6306-ZZ	6205-ZZ	30*47*7	25*40*7
	3	4	Q3H100L4D	Aluminium	191	400	1xM25	140	160	100	243	12	63	28	60	31	8	6306-ZZ	6205-ZZ	30*47*7	30*47*7
	3	6	Q3H132S6A	Aluminium	260	481	1xM32	140-178	216	132	312	12	89	38	80	41	10	6208-ZZ	6208-ZZ	40*62*10	40*62*10
C	4	2	Q3H100L2DE	Aluminium	191	400	1xM25	140	160	100	243	12	63	28	60	31	8	6306-ZZ	6205-ZZ	30*47*7	30*47*7
	4	2	Q3HS112M2C	Aluminium	191	400	1xM25	140	190	112	254	12	70	28	60	31	8	6306-ZZ	6205-ZZ	30*47*7	25*40*7
C	4	4	Q3H100L4E	Aluminium	191	422	1xM25	140	160	100	243	12	63	28	60	31	8	6306-ZZ	6205-ZZ	30*47*7	30*47*7
	4	4	Q3H112M4D	Aluminium	210	396	1xM25	140	190	112	265	12	70	28	60	31	8	6306-ZZ	6206-ZZ	30*47*7	30*47*7
	4	6	Q3H132M6A	Aluminium	260	481	1xM32	140-178	216	132	312	12	89	38	80	41	10	6208-ZZ	6208-ZZ	40*62*10	40*62*10
SC	5,5	2	Q3H100L2E	Aluminium	192	411	1xM25	140	160	100	243	12	63	28	60	31	8	6306-ZZ	6205-ZZ	30*47*7	30*47*7
C	5,5	2	Q3H112M2D	Aluminium	210	396	1xM25	140	190	112	265	12	70	28	60	31	8	6306-ZZ	6206-ZZ	30*47*7	30*47*7
	5,5	2	Q3HS132S2C	Aluminium	210	422	1xM25	140-178	216	132	283	12	89	38	80	41	10	6208-ZZ	6206-ZZ	40*62*10	30*47*7
C	5,5	4	Q3H112M4E	Aluminium	210	421	1xM25	140	190	112	265	12	70	28	60	31	8	6306-ZZ	6206-ZZ	30*47*7	30*47*7
	5,5	4	Q3H132S4B	Aluminium	260	481	1xM32	140-178	216	132	312	12	89	38	80	41	10	6208-ZZ	6208-ZZ	40*62*10	40*62*10
	5,5	6	Q3H132M6B	Aluminium	260	481	1xM32	140-178	216	132	312	12	89	38	80	41	10	6208-ZZ	6208-ZZ	40*62*10	40*62*10
C	7,5	2	Q3H112M2DE	Aluminium	210	421	1xM25	140	190	112	265	12	70	28	60	31	8	6306-ZZ	6206-ZZ	30*47*7	30*47*7
	7,5	2	Q3HS132S2D	Aluminium	210	448	1xM25	140-178	216	132	283	12	89	38	80	41	10	6208-ZZ	6206-ZZ	40*62*10	30*47*7
	7,5	4	Q3H132M4D	Aluminium	260	481	1xM32	140-178	216	132	312	12	89	38	80	41	10	6208-ZZ	6208-ZZ	40*62*10	40*62*10
	7,5	6	Q3H160M6C	Aluminium	305	591	1xM32	210-254	254	160	368	14,5	108	42	110	45	12	6309-ZZ	6209-ZZ	45*72*10	45*72*10

(1) Tolerance DIN EN 50347 “j6” up to 28mm, “k6” above 28mm
(2) According to DIN 6885

					Main Dimensions			Foot Mounted Motors						Shaft				Bearing		Seal	
SIZE	Power [kW]	Number of Poles	Motor Type	Housing Type	AC	L	O	B	A	H	HD	K	C	D[1]	E	GA	F[2]	Drive Side	Non drive Side	Drive Side	Non drive Side
C	11	2	Q3H132M2A	Aluminium	260	481	1xM32	140-178	216	132	312	12	89	38	80	41	10	6208-ZZ	6208-ZZ	40*62*10	40*62*10
	11	2	Q3HS160M2D	Aluminium	260	520	1xM32	210-254	254	160	351	14,5	108	42	110	45	12	6309-ZZ	6208-ZZ	45*72*10	40*62*10
C	11	4	Q3H132M4E	Aluminium	260	520	1xM32	140-178	216	132	312	12	89	38	80	41	10	6309-ZZ	6209-ZZ	40*62*10	40*62*10
	11	4	Q3HS160M4C	Aluminium	260	578	1xM32	210-254	254	160	351	14,5	108	42	110	45	12	6309-ZZ	6208-ZZ	45*72*10	40*62*10
	11	6	Q3H160L6D	Aluminium	305	591	1xM32	210-254	254	160	368	14,5	108	42	110	45	12	6309-ZZ	6209-ZZ	45*72*10	45*72*10
C	15	2	Q3H132M2B	Aluminium	260	520	1xM32	140-178	216	132	312	12	89	38	80	41	10	6208-ZZ	6208-ZZ	40*62*10	40*62*10
	15	2	Q3HS160M2DE	Aluminium	260	580	1xM32	210-254	254	160	351	14,5	108	42	110	45	12	6309-ZZ	6208-ZZ	45*72*10	40*62*10
	15	4	Q3H160L4B	Aluminium	305	591	1xM32	210-254	254	160	368	14,5	108	42	110	45	12	6309-ZZ	6209-ZZ	45*72*10	45*72*10
	15	6	Q3H180L6B	Aluminium	349	696	1xM40	241-279	279	180	437	14,5	121	48	110	51,5	14	6310-ZZ	6310-ZZ	50*80*10	50*80*10
	18,5	2	Q3H160L2C	Aluminium	305	591	1xM32	210-254	254	160	368	14,5	108	42	110	45	12	6309-ZZ	6209-ZZ	45*72*10	45*72*10
C	18,5	4	Q3H160L4C	Aluminium	305	591	1xM32	210-254	254	160	368	14,5	108	42	110	45	12	6309-ZZ	6209-ZZ	45*72*10	45*72*10
	18,5	4	Q3HS180M4B	Aluminium	305	596	1xM32	241-279	279	180	398	14,5	121	48	110	51,5	14	6310-ZZ	6209-ZZ	50*80*10	45*72*10
	18,5	6	Q3H200L6C	Aluminium	349	750	1xM50	305	318	200	455	18,5	133	55	110	59	16	6312-ZZ	6310-ZZ	60*90*10	60*90*10
C	22	2	Q3H160L2D	Aluminium	305	591	1xM32	210-254	254	160	368	14,5	108	42	110	45	12	6309-ZZ	6209-ZZ	45*72*10	45*72*10
	22	2	Q3HS180M2B	Aluminium	305	596	1xM32	241-279	279	180	398	14,5	121	48	110	51,5	14	6310-ZZ	6209-ZZ	50*80*10	45*72*10
	22	4	Q3H180L4B	Aluminium	349	696	1xM40	241-279	279	180	437	14,5	121	48	110	51,5	14	6310-ZZ	6310-ZZ	50*80*10	50*80*10
	22	6	Q3H200L6D	Aluminium	349	759	1xM50	267-305	318	200	455	18,5	133	55	110	59	16	6312-ZZ	6310-ZZ	60*90*10	60*90*10
C	30	2	Q3H180M2B	Aluminium	349	696	1xM40	241-279	279	180	437	14,5	121	48	110	51,5	14	6310-ZZ	6310-ZZ	50*80*10	50*80*10
	30	2	Q3H200L2C	Aluminium	349	706	1xM50	267-305	318	200	455	18,5	133	55	110	59	16	6312-ZZ	6310-ZZ	60*90*10	60*90*10
C	30	4	Q3H180L4C	Aluminium	349	696	1xM40	241-279	279	180	437	14,5	121	48	110	51,5	14	6310-ZZ	6310-ZZ	50*80*10	50*80*10
	30	4	Q3H200L4D	Aluminium	349	759	1xM50	267-305	318	200	455	18,5	133	55	110	59	16	6312-ZZ	6310-ZZ	60*90*10	60*90*10
	30	6	Q3E225M6C	Aluminium	456	765	1xM50	286-311	356	225	485	18,5	149	60	140	64	18	6313-ZZ	6313-ZZ	65*100*13	65*100*13
	37	2	Q3H200L2D	Aluminium	349	706	1xM50	305	318	200	455	18,5	133	55	110	59	16	6312-ZZ	6310-ZZ	60*90*10	60*90*10
	37	4	Q3E225M4B	Aluminium	456	765	1xM50	286-311	356	225	485	18,5	149	60	140	64	18	6313-ZZ	6313-ZZ	65*100*13	65*100*13
SC	45	2	Q3H180L2DE	Aluminium	349	750	1xM40	241-279	279	180	437	14,5	121	48	110	51,5	14	6310-ZZ	6310-ZZ	50*80*10	50*80*10
C	45	2	Q3H200L2DE	Aluminium	349	759	1xM50	267-305	318	200	455	18,5	133	55	110	59	16	6312-ZZ	6310-ZZ	60*90*10	60*90*10
	45	2	Q3E225M2B	Aluminium	456	735	1xM50	286-311	356	225	485	18,5	149	55	110	59	16	6313-ZZ	6313-ZZ	65*100*13	65*100*13
	45	4	Q3E225M4C	Aluminium	456	765	1xM50	286-311	356	225	485	18,5	149	60	140	64	18	6313-ZZ	6313-ZZ	65*100*13	65*100*13
	55	2	Q3E250M2A	Aluminium	527	886	2xM50	349	406	250	615	24	149	60	140	64	18	6315-2Z	6313-2Z	75*112*12	65*100*13

(1) Tolerance DIN EN 50347 “j6” up to 28mm, “k6” above 28mm
(2) According to DIN 6885

DIMENSION - B5, B35

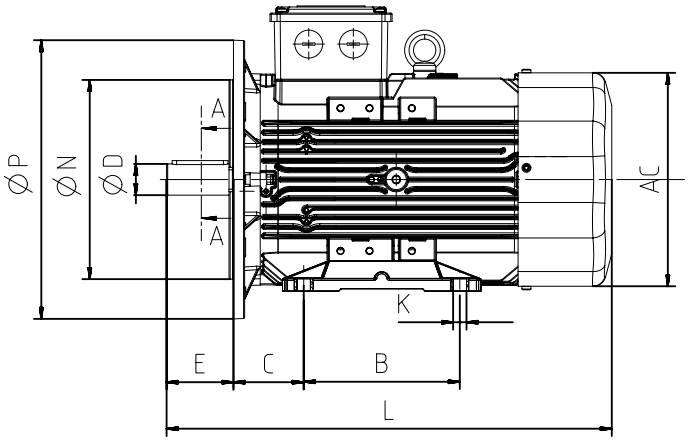

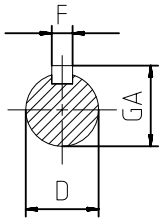

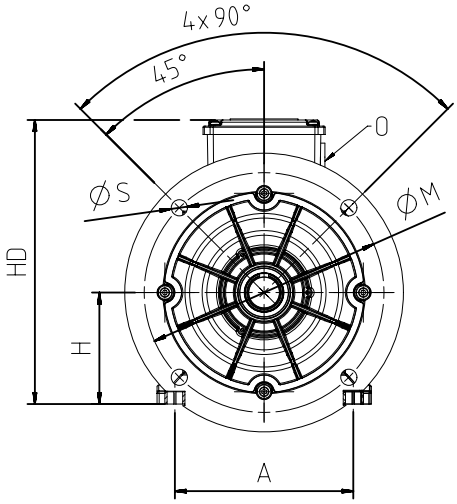

					Main Dimensions			Foot Mounted Motors					Shaft				Bearing		Seal		Flange (FA) (B5)				
SIZE	Power [kW]	Number of Poles	Motor Type	Housing Type	AC	L	O	B	A	H	HD	K	D(1)	E	GA	F(2)	Drive Side	Non drive Side	Drive Side	Non drive Side	P	N(3)	M	R	S
	0,75	2	Q3H80M2C	Aluminium	158	268	1xM20	100	125	80	216	10	19	40	21,5	6	6204-ZZ	6204-ZZ	20*30*7	20*30*7	200	130	165	-	12
	0,75	4	Q3H80M4D	Aluminium	158	268	1xM20	100	125	80	216	10	19	40	21,5	6	6204-ZZ	6204-ZZ	20*30*7	20*30*7	200	130	165	-	12
	0,75	6	Q3H90L6C	Aluminium	172	344	1xM25	100-125	140	90	223	10	24	50	27	8	6305-ZZ	6205-ZZ	25*40*7	25*40*7	200	130	165	-	12
	1,1	2	Q3H80M2D	Aluminium	158	268	1xM20	100	125	80	216	10	19	40	21,5	6	6204-ZZ	6204-ZZ	20*30*7	20*30*7	200	130	165	-	12
C	1,1	4	Q3H80M4DE	Aluminium	158	268	1xM20	100	125	80	216	10	19	40	21,5	6	6204-ZZ	6204-ZZ	20*30*7	20*30*7	200	130	165	-	12
	1,1	4	Q3HS90S4C	Aluminium	158	303	1xM25	100-125	140	90	213	10	24	50	27	8	6305-ZZ	6204-ZZ	25*40*7	20*30*7	200	130	165	-	12
	1,1	6	Q3H90L6D	Aluminium	172	344	1xM25	100-125	140	90	223	10	24	50	27	8	6305-ZZ	6205-ZZ	25*40*7	25*40*7	200	130	165	-	12
C	1,5	2	Q3H80M2DE	Aluminium	158	268	1xM20	100	125	80	216	10	19	40	21,5	6	6204-ZZ	6204-ZZ	20*30*7	20*30*7	200	130	165	-	12
	1,5	2	Q3HS90S2C	Aluminium	158	303	1xM25	100-125	140	90	213	10	24	50	27	8	6305-ZZ	6204-ZZ	25*40*7	20*30*7	200	130	165	-	12
	1,5	4	Q3H90L4D	Aluminium	172	344	1xM25	100-125	140	90	223	10	24	50	27	8	6305-ZZ	6205-ZZ	25*40*7	25*40*7	200	130	165	-	12
	1,5	6	Q3H100L6D	Aluminium	191	400	1xM25	140	160	100	243	12	28	60	31	8	6306-ZZ	6205-ZZ	30*47*7	30*47*7	250	180	215	-	14,5
	2,2	2	Q3H90L2D	Aluminium	172	344	1xM25	100-125	140	90	223	10	24	50	27	8	6305-ZZ	6205-ZZ	25*40*7	25*40*7	200	130	165	-	12
C	2,2	4	Q3H90L4DE	Aluminium	172	344	1xM25	100-125	140	90	223	10	24	50	27	8	6305-ZZ	6205-ZZ	25*40*7	25*40*7	200	130	165	-	12
	2,2	4	Q3HS100L4C	Aluminium	172	384	1xM25	140	160	100	233	12	28	60	31	8	6306-ZZ	6205-ZZ	30*47*7	25*40*7	250	180	215	-	14,5
	2,2	6	Q3H112M6D	Aluminium	210	396	1xM25	140	190	112	265	12	28	60	31	8	6306-ZZ	6206-ZZ	30*47*7	30*47*7	250	180	215	-	14,5
C	3	2	Q3H90L2E	Aluminium	172	344	1xM25	100-125	140	90	223	10	24	50	27	8	6305-ZZ	6205-ZZ	25*40*7	25*40*7	200	130	165	-	12
	3	2	Q3HS100L2C	Aluminium	172	349	1xM25	140	160	100	233	12	28	60	31	8	6306-ZZ	6205-ZZ	30*47*7	25*40*7	250	180	215	-	14,5
	3	4	Q3H100L4D	Aluminium	191	400	1xM25	140	160	100	243	12	28	60	31	8	6306-ZZ	6205-ZZ	30*47*7	30*47*7	250	180	215	-	14,5
	3	6	Q3H132S6A	Aluminium	260	481	1xM32	140-178	216	132	312	12	38	80	41	10	6208-ZZ	6208-ZZ	40*62*10	40*62*10	300	230	265	-	14,5
C	4	2	Q3H100L2DE	Aluminium	191	400	1xM25	140	160	100	243	12	28	60	31	8	6306-ZZ	6205-ZZ	30*47*7	30*47*7	250	180	215	-	14,5
	4	2	Q3HS112M2C	Aluminium	191	399	1xM25	140	190	112	254	12	28	60	31	8	6306-ZZ	6205-ZZ	30*47*7	25*40*7	250	180	215	-	14,5
C	4	4	Q3H100L4E	Aluminium	191	422	1xM25	140	160	100	243	12	28	60	31	8	6306-ZZ	6205-ZZ	30*47*7	30*47*7	250	180	215	-	14,5
	4	4	Q3H112M4D	Aluminium	210	396	1xM25	140	190	112	265	12	28	60	31	8	6306-ZZ	6206-ZZ	30*47*7	30*47*7	250	180	215	-	14,5
	4	6	Q3H132M6A	Aluminium	260	481	1xM32	140-178	216	132	312	12	38	80	41	10	6208-ZZ	6208-ZZ	40*62*10	40*62*10	300	230	265	-	14,5
SC	5,5	2	Q3H100L2E	Aluminium	192	411	1xM25	140	160	100	243	12	28	60	31	8	6306-ZZ	6205-ZZ	30*47*7	30*47*7	250	180	215	-	14,5
C	5,5	2	Q3H112M2D	Aluminium	210	396	1xM25	140	190	112	265	12	28	60	31	8	6306-ZZ	6206-ZZ	30*47*7	30*47*7	250	180	215	-	14,5
	5,5	2	Q3HS132S2C	Aluminium	210	422	1xM25	140-178	216	132	283	12	38	80	41	10	6208-ZZ	6206-ZZ	40*62*10	30*47*7	300	230	265	-	14,5
C	5,5	4	Q3H112M4E	Aluminium	210	421	1xM25	140	190	112	265	12	28	60	31	8	6306-ZZ	6206-ZZ	30*47*7	30*47*7	250	180	215	-	14,5
	5,5	4	Q3H132S4B	Aluminium	260	481	1xM32	140-178	216	132	312	12	38	80	41	10	6208-ZZ	6208-ZZ	40*62*10	40*62*10	300	230	265	-	14,5
	5,5	6	Q3H132M6B	Aluminium	260	481	1xM32	140-178	216	132	312	12	38	80	41	10	6208-ZZ	6208-ZZ	40*62*10	40*62*10	300	230	265	-	14,5
C	7,5	2	Q3H112M2DE	Aluminium	210	421	1xM25	140	190	112	265	12	28	60	31	8	6306-ZZ	6206-ZZ	30*47*7	30*47*7	250	180	215	-	14,5
	7,5	2	Q3HS132S2D	Aluminium	210	448	1xM25	140-178	216	132	283	12	38	80	41	10	6208-ZZ	6206-ZZ	40*62*10	30*47*7	300	230	265	-	14,5
	7,5	4	Q3H132M4D	Aluminium	260	481	1xM32	140-178	216	132	312	12	38	80	41	10	6208-ZZ	6208-ZZ	40*62*10	40*62*10	300	230	265	-	14,5

(1) Tolerance DIN EN 50347 “j6” up to 28mm, “k6” above 28mm
(2) According to DIN 6885
(3) Tolerance DIN EN 50347 “j6”

					Main Dimensions			Foot Mounted Motors					Shaft				Bearing		Seal		Flange [FA] [B5]				
SIZE	Power [kW]	Number of Poles	Motor Type	Housing Type	AC	L	O	B	A	H	HD	K	D[1]	E	GA	F[2]	Drive Side	Non drive Side	Drive Side	Non drive Side	P	N[3]	M	R	S
	7.5	6	Q3H160M6C	Aluminium	305	591	1xM32	210-254	254	160	368	14.5	42	110	45	12	6309-ZZ	6209-ZZ	45*72*10	45*72*10	350	250	300	-	18.5
C	11	2	Q3H132M2A	Aluminium	260	481	1xM32	140-178	216	132	312	12	38	80	41	10	6208-ZZ	6208-ZZ	40*62*10	40*62*10	300	230	265	-	14.5
	11	2	Q3HS160M2D	Aluminium	260	520	1xM32	210-254	254	160	351	14.5	42	110	45	12	6309-ZZ	6208-ZZ	45*72*10	40*62*10	350	250	300	-	18.5
C	11	4	Q3H132M4E	Aluminium	260	520	1xM32	140-178	216	132	312	12	38	80	41	10	6309-ZZ	6209-ZZ	40*62*10	40*62*10	300	230	265	-	14.5
	11	4	Q3HS160M4C	Aluminium	260	580	1xM32	210-254	254	160	351	14.5	42	110	45	12	6309-ZZ	6208-ZZ	45*72*10	40*62*10	350	250	300	-	18.5
	11	6	Q3H160L6D	Aluminium	305	591	1xM32	210-254	254	160	368	14.5	42	110	45	12	6309-ZZ	6209-ZZ	45*72*10	45*72*10	350	250	300	-	18.5
C	15	2	Q3H132M2B	Aluminium	260	520	1xM32	140-178	216	132	312	12	38	80	41	10	6208-ZZ	6208-ZZ	40*62*10	40*62*10	300	230	265	-	14.5
	15	2	Q3HS160M2DE	Aluminium	260	580	1xM32	210-254	254	160	351	14.5	42	110	45	12	6309-ZZ	6208-ZZ	45*72*10	40*62*10	350	250	300	-	18.5
	15	4	Q3H160L4B	Aluminium	305	591	1xM32	210-254	254	160	368	14.5	42	110	45	12	6309-ZZ	6209-ZZ	45*72*10	45*72*10	350	250	300	-	18.5
	15	6	Q3H180L6B	Aluminium	349	696	1xM40	241-279	279	180	437	14.5	48	110	51.5	14	6310-ZZ	6310-ZZ	50*80*10	50*80*10	350	250	300	-	18.5
C	18.5	4	Q3H160L4C	Aluminium	305	591	1xM32	210-254	254	160	368	14.5	42	110	45	12	6309-ZZ	6209-ZZ	45*72*10	45*72*10	350	250	300	-	18.5
	18.5	4	Q3HS180M4B	Aluminium	305	596	1xM32	241-279	279	180	398	14.5	48	110	51.5	14	6310-ZZ	6209-ZZ	50*80*10	45*72*10	350	250	300	-	18.5
	18.5	6	Q3H200L6C	Aluminium	349	750	1xM50	305	318	200	455	18.5	55	110	59	16	6312-ZZ	6310-ZZ	60*90*10	60*90*10	400	300	350	-	18.5
C	22	2	Q3H160L2D	Aluminium	305	591	1xM32	210-254	254	160	368	14.5	42	110	45	12	6309-ZZ	6209-ZZ	45*72*10	45*72*10	350	250	300	-	18.5
	22	2	Q3HS180M2B	Aluminium	305	596	1xM32	241-279	279	180	398	14.5	48	110	51.5	14	6310-ZZ	6209-ZZ	50*80*10	45*72*10	350	250	300	-	18.5
	22	4	Q3H180L4B	Aluminium	349	696	1xM40	241-279	279	180	437	14.5	48	110	51.5	14	6310-ZZ	6310-ZZ	50*80*10	50*80*10	350	250	300	-	18.5
	22	6	Q3H200L6D	Aluminium	349	759	1xM50	305	318	200	455	18.5	55	110	59	16	6312-ZZ	6310-ZZ	60*90*10	60*90*10	400	300	350	-	18.5
C	30	2	Q3H180M2B	Aluminium	349	696	1xM40	241-279	279	180	437	14.5	48	110	51.5	14	6310-ZZ	6310-ZZ	50*80*10	50*80*10	350	250	300	-	18.5
	30	2	Q3H200L2C	Aluminium	349	706	1xM50	305	318	200	455	18.5	55	110	59	16	6312-ZZ	6310-ZZ	60*90*10	60*90*10	400	300	350	-	18.5
C	30	4	Q3H180L4C	Aluminium	349	696	1xM40	241-279	279	180	437	14.5	48	110	51.5	14	6310-ZZ	6310-ZZ	50*80*10	50*80*10	350	250	300	-	18.5
	30	4	Q3H200L4D	Aluminium	349	759	1xM50	305	318	200	455	18.5	55	110	59	16	6312-ZZ	6310-ZZ	60*90*10	60*90*10	400	300	350	-	18.5
	30	6	Q3E225M6C	Aluminium	456	765	1xM50	286-311	356	225	485	18.5	60	140	64	18	6313-ZZ	6313-ZZ	65*100*13	65*100*13	450	350	400	-	18.5
	37	2	Q3H200L2D	Aluminium	349	706	1xM50	305	318	200	455	18.5	55	110	59	16	6312-ZZ	6310-ZZ	60*90*10	60*90*10	400	300	350	-	18.5
	37	4	Q3E225M4B	Aluminium	456	765	1xM50	286-311	356	225	485	18.5	60	140	64	18	6313-ZZ	6313-ZZ	65*100*13	65*100*13	450	350	400	-	18.5
SC	45	2	Q3H180L2DE	Aluminium	349	750	1xM40	241-279	279	180	437	14.5	48	110	51.5	14	6310-ZZ	6310-ZZ	50*80*10	50*80*10	350	250	300	-	18.5
C	45	2	Q3H200L2DE	Aluminium	349	759	1xM50	267-305	318	200	455	18.5	55	110	59	16	6312-ZZ	6310-ZZ	60*90*10	60*90*10	400	300	350	-	18.5
	45	2	Q3E225M2B	Aluminium	456	735	1xM50	286-311	356	225	485	18.5	55	110	59	16	6313-ZZ	6313-ZZ	65*100*13	65*100*13	450	350	400	-	18.5
	45	4	Q3E225M4C	Aluminium	456	765	1xM50	286-311	356	225	485	18.5	60	140	64	18	6313-ZZ	6313-ZZ	65*100*13	65*100*13	450	350	400	-	18.5
	55	2	Q3E250M2A	Aluminium	527	886	2*M50	349	406	250	615	24	60	140	64	18	6315-2Z	6313-2Z	75*112*12	65*100*13	550	450	500	-	18.5

(1) Tolerance DIN EN 50347 “j6” up to 28mm, “k6” above 28mm
(2) According to DIN 6885
(3) Tolerance DIN EN 50347 “j6”

DIMENSION - B14a, B34a

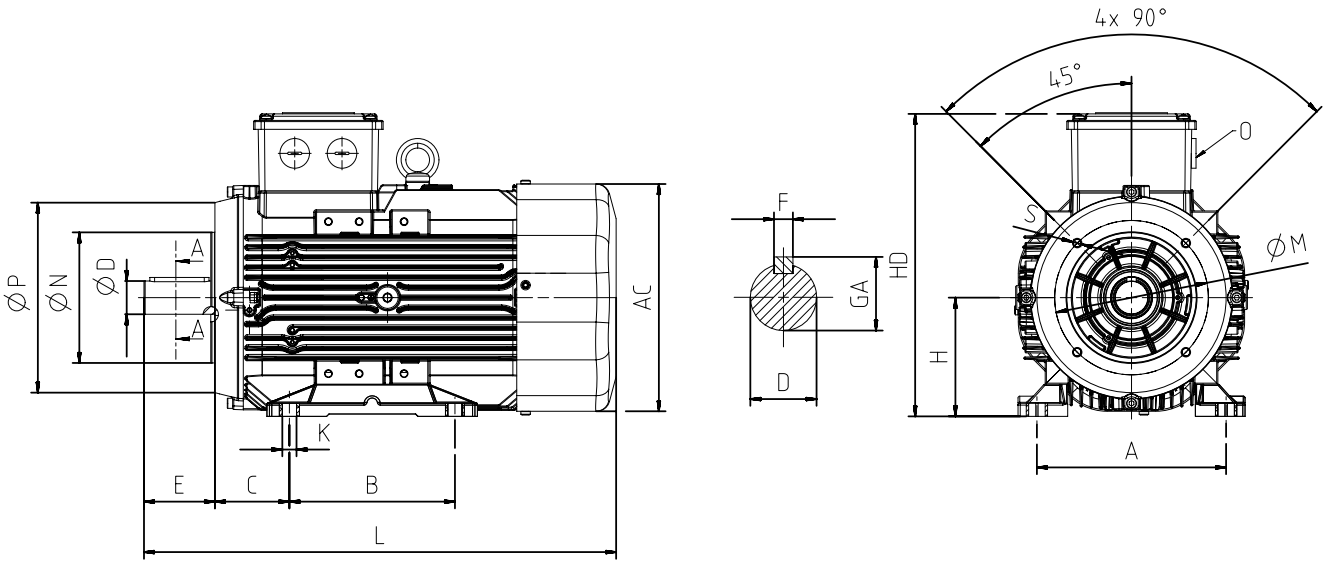

					Main Dimensions			Foot Mounted Motors					Shaft				Bearing		Seal		Flange [FC] [B14a]				
SIZE	Power [kW]	Number of Poles	Motor Type	Housing Type	AC	L	O	B	A	H	HD	K	D[1]	E	GA	F[2]	Drive Side	Non drive Side	Drive Side	Non drive Side	P	N[3]	M	R	S
	0.75	2	Q3H80M2C	Aluminium	158	268	1xM20	100	125	80	216	10	19	40	21.5	6	6204-ZZ	6204-ZZ	20*30*7	20*30*7	120	80	100	-	M6
	0.75	4	Q3H80M4D	Aluminium	158	268	1xM20	100	125	80	216	10	19	40	21.5	6	6204-ZZ	6204-ZZ	20*30*7	20*30*7	120	80	100	-	M6
	0.75	6	Q3H90L6C	Aluminium	172	344	1xM25	100-125	140	90	223	10	24	50	27	8	6305-ZZ	6205-ZZ	25*40*7	25*40*7	140	95	115	-	M8
	1.1	2	Q3H80M2D	Aluminium	158	268	1xM20	100	125	80	216	10	19	40	21.5	6	6204-ZZ	6204-ZZ	20*30*7	20*30*7	120	80	100	-	M6
C	1.1	4	Q3H80M4DE	Aluminium	158	268	1xM20	100	125	80	216	10	19	40	21.5	6	6204-ZZ	6204-ZZ	20*30*7	20*30*7	120	80	100	-	M6
	1.1	4	Q3HS90S4C	Aluminium	158	303	1xM25	100-125	140	90	213	10	24	50	27	8	6305-ZZ	6204-ZZ	25*40*7	20*30*7	140	95	115	-	M8
	1.1	6	Q3H90L6D	Aluminium	172	344	1xM25	100-125	140	90	223	10	24	50	27	8	6305-ZZ	6205-ZZ	25*40*7	25*40*7	140	95	115	-	M8
C	1.5	2	Q3H80M2DE	Aluminium	158	268	1xM20	100	125	80	216	10	19	40	21.5	6	6204-ZZ	6204-ZZ	20*30*7	20*30*7	120	80	100	-	M6
	1.5	2	Q3HS90S2C	Aluminium	158	303	1xM25	100-125	140	90	213	10	24	50	27	8	6305-ZZ	6204-ZZ	25*40*7	20*30*7	140	95	115	-	M8
	1.5	4	Q3H90L4D	Aluminium	172	344	1xM25	100-125	140	90	223	10	24	50	27	8	6305-ZZ	6205-ZZ	25*40*7	25*40*7	140	95	115	-	M8
	1.5	6	Q3H100L6D	Aluminium	191	400	1xM25	140	160	100	243	12	28	60	31	8	6306-ZZ	6205-ZZ	30*47*7	30*47*7	160	110	130	-	M8
	2.2	2	Q3H90L2D	Aluminium	172	344	1xM25	100-125	140	90	223	10	24	50	27	8	6305-ZZ	6205-ZZ	25*40*7	25*40*7	140	95	115	-	M8
C	2.2	4	Q3H90L4DE	Aluminium	172	344	1xM25	100-125	140	90	223	10	24	50	27	8	6305-ZZ	6205-ZZ	25*40*7	25*40*7	140	95	115	-	M8
	2.2	4	Q3HS100L4C	Aluminium	172	384	1xM25	140	160	100	233	12	28	60	31	8	6306-ZZ	6205-ZZ	30*47*7	25*40*7	160	110	130	-	M8
	2.2	6	Q3H112M6D	Aluminium	210	396	1xM25	140	190	112	265	12	28	60	31	8	6306-ZZ	6206-ZZ	30*47*7	30*47*7	160	110	130	-	M8
C	3	2	Q3H90L2E	Aluminium	172	344	1xM25	100-125	140	90	223	10	24	50	27	8	6305-ZZ	6205-ZZ	25*40*7	25*40*7	140	95	115	-	M8
	3	2	Q3HS100L2C	Aluminium	172	349	1xM25	140	160	100	233	12	28	60	31	8	6306-ZZ	6205-ZZ	30*47*7	25*40*7	160	110	130	-	M8
	3	4	Q3H100L4D	Aluminium	191	400	1xM25	140	160	100	243	12	28	60	31	8	6306-ZZ	6205-ZZ	30*47*7	30*47*7	160	110	130	-	M8
	3	6	Q3H132S6A	Aluminium	260	481	1xM32	140-178	216	132	312	12	38	80	41	10	6208-ZZ	6208-ZZ	40*62*10	40*62*10	200	130	165	-	M10
C	4	2	Q3H100L2DE	Aluminium	191	400	1xM25	140	160	100	243	12	28	60	31	8	6306-ZZ	6205-ZZ	30*47*7	30*47*7	160	110	130	-	M8
	4	2	Q3HS112M2C	Aluminium	191	399	1xM25	140	190	112	254	12	28	60	31	8	6306-ZZ	6205-ZZ	30*47*7	25*40*7	160	110	130	-	M8
C	4	4	Q3H100L4E	Aluminium	191	422	1xM25	140	160	100	243	12	28	60	31	8	6306-ZZ	6205-ZZ	30*47*7	30*47*7	160	110	130	-	M8
	4	4	Q3H112M4D	Aluminium	210	396	1xM25	140	190	112	265	12	28	60	31	8	6306-ZZ	6206-ZZ	30*47*7	30*47*7	160	110	130	-	M8
	4	6	Q3H132M6A	Aluminium	260	481	1xM32	140-178	216	132	312	12	38	80	41	10	6208-ZZ	6208-ZZ	40*62*10	40*62*10	200	130	165	-	M10

(1) Tolerance DIN EN 50347 "j6" up to 28mm, "k6" above 28mm
(2) According to DIN 6885
(3) Tolerance DIN EN 50347 "j6"

					Main Dimensions			Foot Mounted Motors					Shaft				Bearing		Seal		Flange (FC) (B14a)				
SIZE	Power [kW]	Number of Poles	Motor Type	Housing Type	AC	L	O	B	A	H	HD	K	D[1]	E	GA	F[2]	Drive Side	Non drive Side	Drive Side	Non drive Side	P	N[3]	M	R	S
SC	5.5	2	Q3H100L2E	Aluminium	192	411	1xM25	140	160	100	243	12	28	60	31	8	6306-ZZ	6205-ZZ	30*47*7	30*47*7	160	110	130	-	M8
C	5.5	2	Q3H112M2D	Aluminium	210	396	1xM25	140	190	112	265	12	28	60	31	8	6306-ZZ	6206-ZZ	30*47*7	30*47*7	160	110	130	-	M8
	5.5	2	Q3HS132S2C	Aluminium	210	422	1xM25	140-178	216	132	283	12	38	80	41	10	6208-ZZ	6206-ZZ	40*62*10	30*47*7	200	130	165	-	M10
C	5.5	4	Q3H112M4E	Aluminium	210	421	1xM25	140	190	112	265	12	28	60	31	8	6306-ZZ	6206-ZZ	30*47*7	30*47*7	160	110	130	-	M8
	5.5	4	Q3H132S4B	Aluminium	260	481	1xM32	140-178	216	132	312	12	38	80	41	10	6208-ZZ	6208-ZZ	40*62*10	40*62*10	200	130	165	-	M10
	5.5	6	Q3H132M6B	Aluminium	260	481	1xM32	140-178	216	132	312	12	38	80	41	10	6208-ZZ	6208-ZZ	40*62*10	40*62*10	200	130	165	-	M10
C	7.5	2	Q3H112M2DE	Aluminium	210	421	1xM25	140	190	112	265	12	28	60	31	8	6306-ZZ	6206-ZZ	30*47*7	30*47*7	160	110	130	-	M8
	7.5	2	Q3HS132S2D	Aluminium	210	448	1xM25	140-178	216	132	283	12	38	80	41	10	6208-ZZ	6206-ZZ	40*62*10	30*47*7	200	130	165	-	M10
	7.5	4	Q3H132M4D	Aluminium	260	481	1xM32	140-178	216	132	312	12	38	80	41	10	6208-ZZ	6208-ZZ	40*62*10	40*62*10	200	130	165	-	M10
C	11	2	Q3H132M2A	Aluminium	260	481	1xM32	140-178	216	132	312	12	38	80	41	10	6208-ZZ	6208-ZZ	40*62*10	40*62*10	200	130	165	-	M10
C	11	4	Q3H132M4E	Aluminium	260	520	1xM32	140-178	216	132	312	12	38	80	41	10	6208-ZZ	6208-ZZ	40*62*10	40*62*10	200	130	165	-	M10
C	15	2	Q3H132M2B	Aluminium	260	520	1xM32	140-178	216	132	312	12	38	80	41	10	6208-ZZ	6208-ZZ	40*62*10	40*62*10	200	130	165	-	M10

(1) Tolerance DIN EN 50347 "j6" up to 28mm, "k6" above 28mm
(2) According to DIN 6885
(3) Tolerance DIN EN 50347 "j6"

DIMENSION - B14b, B34b

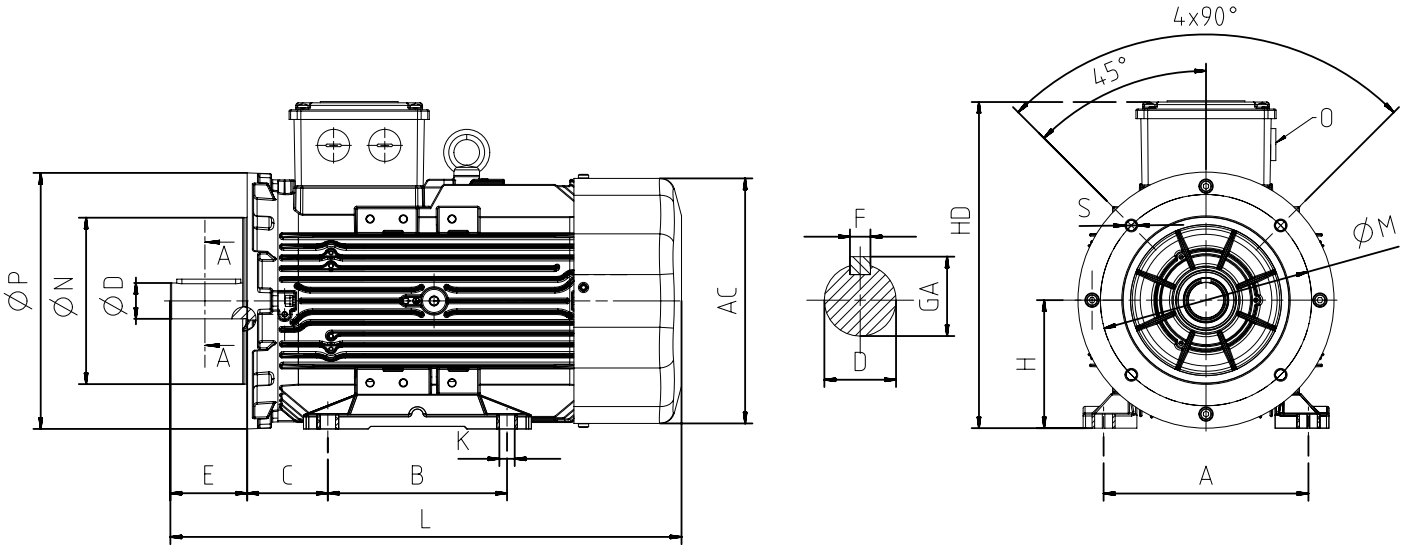

					Main Dimensions			Foot Mounted Motors					Shaft				Bearing		Seal		Flange (FB) (B14b)				
SIZE	Power (kW)	Number of Poles	Motor Type	Housing Type	AC	L	O	B	A	H	HD	K	D[1]	E	GA	F[2]	Drive Side	Non drive Side	Drive Side	Non drive Side	P	N[3]	M	R	S
	0.75	2	Q3H80M2C	Aluminium	158	268	1xM20	100	125	80	216	10	19	40	21,5	6	6204-ZZ	6204-ZZ	20*30*7	20*30*7	160	110	130	-	M8
	0.75	4	Q3H80M4D	Aluminium	158	268	1xM20	100	125	80	216	10	19	40	21,5	6	6204-ZZ	6204-ZZ	20*30*7	20*30*7	160	110	130	-	M8
	0.75	6	Q3H90L6C	Aluminium	172	344	1xM25	100-125	140	90	223	10	24	50	27	8	6305-ZZ	6205-ZZ	25*40*7	25*40*7	160	110	130	-	M8
	1,1	2	Q3H80M2D	Aluminium	158	268	1xM20	100	125	80	216	10	19	40	21,5	6	6204-ZZ	6204-ZZ	20*30*7	20*30*7	160	110	130	-	M8
C	1,1	4	Q3H80M4DE	Aluminium	158	268	1xM20	100	125	80	216	10	19	40	21,5	6	6204-ZZ	6204-ZZ	20*30*7	20*30*7	160	110	130	-	M8
	1,1	4	Q3HS90S4C	Aluminium	158	303	1xM25	100-125	140	90	213	10	24	50	27	8	6305-ZZ	6204-ZZ	25*40*7	20*30*7	160	110	130	-	M8
	1,1	6	Q3H90L6D	Aluminium	172	344	1xM25	100-125	140	90	223	10	24	50	27	8	6305-ZZ	6205-ZZ	25*40*7	25*40*7	160	110	130	-	M8
C	1,5	2	Q3H80M2DE	Aluminium	158	268	1xM20	100	125	80	216	10	19	40	21,5	6	6204-ZZ	6204-ZZ	20*30*7	20*30*7	160	110	130	-	M8
	1,5	2	Q3HS90S2C	Aluminium	158	303	1xM25	100-125	140	90	213	10	24	50	27	8	6305-ZZ	6204-ZZ	25*40*7	20*30*7	160	110	130	-	M8
	1,5	4	Q3H90L4D	Aluminium	172	344	1xM25	100-125	140	90	223	10	24	50	27	8	6305-ZZ	6205-ZZ	25*40*7	25*40*7	160	110	130	-	M8
	1,5	6	Q3H100L6D	Aluminium	191	400	1xM25	140	160	100	243	12	28	60	31	8	6306-ZZ	6205-ZZ	30*47*7	30*47*7	200	130	165	-	M10
	2,2	2	Q3H90L2D	Aluminium	172	344	1xM25	100-125	140	90	223	10	24	50	27	8	6305-ZZ	6205-ZZ	25*40*7	25*40*7	160	110	130	-	M8
C	2,2	4	Q3H90L4DE	Aluminium	172	344	1xM25	100-125	140	90	223	10	24	50	27	8	6305-ZZ	6205-ZZ	25*40*7	25*40*7	160	110	130	-	M8
	2,2	4	Q3HS100L4C	Aluminium	172	384	1xM25	140	160	100	233	12	28	60	31	8	6306-ZZ	6205-ZZ	30*47*7	25*40*7	200	130	165	-	M10
	2,2	6	Q3H112M6D	Aluminium	210	396	1xM25	140	190	112	265	12	28	60	31	8	6306-ZZ	6206-ZZ	30*47*7	30*47*7	200	130	165	-	M10
C	3	2	Q3H90L2E	Aluminium	172	344	1xM25	100-125	140	90	223	10	24	50	27	8	6305-ZZ	6205-ZZ	25*40*7	25*40*7	160	110	130	-	M8
	3	2	Q3HS100L2C	Aluminium	172	349	1xM25	140	160	100	233	12	28	60	31	8	6306-ZZ	6205-ZZ	30*47*7	25*40*7	200	130	165	-	M10
	3	4	Q3H100L4D	Aluminium	191	400	1xM25	140	160	100	243	12	28	60	31	8	6306-ZZ	6205-ZZ	30*47*7	30*47*7	200	130	165	-	M10
	3	6	Q3H132S6A	Aluminium	260	481	1xM32	140-178	216	132	312	12	38	80	41	10	6208-ZZ	6208-ZZ	40*62*10	40*62*10	250	180	215	-	M12
C	4	2	Q3H100L2DE	Aluminium	191	400	1xM25	140	160	100	243	12	28	60	31	8	6306-ZZ	6205-ZZ	30*47*7	30*47*7	200	130	165	-	M10
	4	2	Q3HS112M2C	Aluminium	191	399	1xM25	140	190	112	254	12	28	60	31	8	6306-ZZ	6205-ZZ	30*47*7	25*40*7	200	130	165	-	M10
C	4	4	Q3H100L4E	Aluminium	191	422	1xM25	140	160	100	243	12	28	60	31	8	6306-ZZ	6205-ZZ	30*47*7	30*47*7	200	130	165	-	M10
	4	4	Q3H112M4D	Aluminium	210	396	1xM25	140	190	112	265	12	28	60	31	8	6306-ZZ	6206-ZZ	30*47*7	30*47*7	200	130	165	-	M10
	4	6	Q3H132M6A	Aluminium	260	481	1xM32	140-178	216	132	312	12	38	80	41	10	6208-ZZ	6208-ZZ	40*62*10	40*62*10	250	180	215	-	M12

(1) Tolerance DIN EN 50347 "j6" up to 28mm, "k6" above 28mm
(2) According to DIN 6885
(3) Tolerance DIN EN 50347 "j6"

					Main Dimensions			Foot Mounted Motors					Shaft				Bearing		Seal		Flange (FB) (B14b)				
SIZE	Power (kW)	Number of Poles	Motor Type	Housing Type	AC	L	O	B	A	H	HD	K	D[1]	E	GA	F[2]	Drive Side	Non drive Side	Drive Side	Non drive Side	P	N[3]	M	R	S
SC	5.5	2	Q3H100L2E	Aluminium	192	411	1xM25	140	160	100	243	12	28	60	31	8	6306-ZZ	6205-ZZ	30*47*7	30*47*7	200	130	165	-	M10
C	5.5	2	Q3H112M2D	Aluminium	210	396	1xM25	140	190	112	265	12	28	60	31	8	6306-ZZ	6206-ZZ	30*47*7	30*47*7	200	130	165	-	M10
	5.5	2	Q3HS132S2C	Aluminium	210	422	1xM25	140-178	216	132	283	12	38	80	41	10	6208-ZZ	6206-ZZ	40*62*10	30*47*7	250	180	215	-	M12
C	5.5	4	Q3H112M4E	Aluminium	210	421	1xM25	140	190	112	265	12	28	60	31	8	6306-ZZ	6206-ZZ	30*47*7	30*47*7	200	130	165	-	M10
	5.5	4	Q3H132S4B	Aluminium	260	481	1xM32	140-178	216	132	312	12	38	80	41	10	6208-ZZ	6208-ZZ	40*62*10	40*62*10	250	180	215	-	M12
	5.5	6	Q3H132M6B	Aluminium	260	481	1xM32	140-178	216	132	312	12	38	80	41	10	6208-ZZ	6208-ZZ	40*62*10	40*62*10	250	180	215	-	M12
C	7.5	2	Q3H112M2DE	Aluminium	210	421	1xM25	140	190	112	265	12	28	60	31	8	6306-ZZ	6206-ZZ	30*47*7	30*47*7	200	130	165	-	M10
	7.5	2	Q3HS132S2D	Aluminium	210	448	1xM25	140-178	216	132	283	12	38	80	41	10	6208-ZZ	6206-ZZ	40*62*10	30*47*7	250	180	215	-	M12
	7.5	4	Q3H132M4D	Aluminium	260	481	1xM32	140-178	216	132	312	12	38	80	41	10	6208-ZZ	6208-ZZ	40*62*10	40*62*10	250	180	215	-	M12
C	11	2	Q3H132M2A	Aluminium	260	481	1xM32	140-178	216	132	312	12	38	80	41	10	6208-ZZ	6208-ZZ	40*62*10	40*62*10	250	180	215	-	M12
C	11	4	Q3H132M4E	Aluminium	260	520	1xM32	140-178	216	132	312	12	38	80	41	10	6208-ZZ	6208-ZZ	40*62*10	40*62*10	250	180	215	-	M12
C	15	2	Q3H132M2B	Aluminium	260	520	1xM32	140-178	216	132	312	12	38	80	41	10	6208-ZZ	6208-ZZ	40*62*10	40*62*10	250	180	215	-	M12

(1) Tolerance DIN EN 50347 "j6" up to 28mm, "k6" above 28mm
(2) According to DIN 6885
(3) Tolerance DIN EN 50347 "j6"

ELECTRICAL CHARACTERISTICS AT 50 Hz

	MOTOR TYPE	HOUSING TYPE	RATED VALUES					STARTING VALUES				Break-down Torque Ratio	EFFICIENCY *			Cosφ	J	Weight [B3]	Sound Pressure Level dBA **
			POWER		SPEED	CURRENT	TORQUE	CURRENT I_A / I_N		TORQUE M_A / M_N			η %						
			kW	HP	rpm	A	Nm	λ	Δ	λ	Δ	Mk/ Mn	4/4	3/4	2/4	4/4	kgm²	kg	
	2 pole 3000 rpm																		
230/400V	Q3N80S2C	Aluminium	0,75	1	2890	1,8	2,5	7,7		3,4		4,1	80,7	77,6	73,2	0,77			57
230/400V	Q3N80S2D	Aluminium	1,1	1,5	2880	2,3	3,7	8,2		3,3		4	82,7	80,6	77,4	0,82			58
230/400V	Q3N90S2C	Aluminium	1,5	2	2885	3,1	5	7,4		2,9		3,5	84,2	82,6	80,5	0,83			61
230/400V	Q3N90S2D	Aluminium	2,2	3	2880	4,6	7,3	5,6		3,4		3,7	85,9	85,7	84,5	0,81			62
230/400V	Q3N100S2C	Aluminium	3	4	2913	5,7	9,8	9,8		3,2		4,7	87,1	87,3	85,5	0,88			65
	4 pole 1500 rpm																		
230/400V	Q3N80S4C	Aluminium	0,55	0,75	1425	1,4	3,8	6,4		3		3,4	80,8	80,4	76,8	0,7			47
230/400V	Q3N80S4D	Aluminium	0,75	1,1	1425	1,9	5,1	6		2,9		3,2	82,5	81,5	79,1	0,72			48
230/400V	Q3N90S4C	Aluminium	1,1	1,5	1433	2,5	7,3	6,9		2,9		3,6	84,1	83,8	82,3	0,77			45
230/400V	Q3N90L4D	Aluminium	1,5	2,2	1433	3,4	10	7,3		3,2		3,9	85,3	85	83,5	0,76			46
230/400V	Q3N100S4C	Aluminium	2,2	3	1443	4,8	14,6	8		3,2		3,9	86,7	85,8	84,1	0,78			48
230/400V	Q3N100L4D	Aluminium	3	4	1445	6,6	19,8	8		3,3		3,9	87,7	87,1	84,9	0,76			51

* According to IEC 60034-2-1
** The sound pressure measurements are taken 1m away from the motor
** Tolerance +3 dBA

DIMENSION - B3

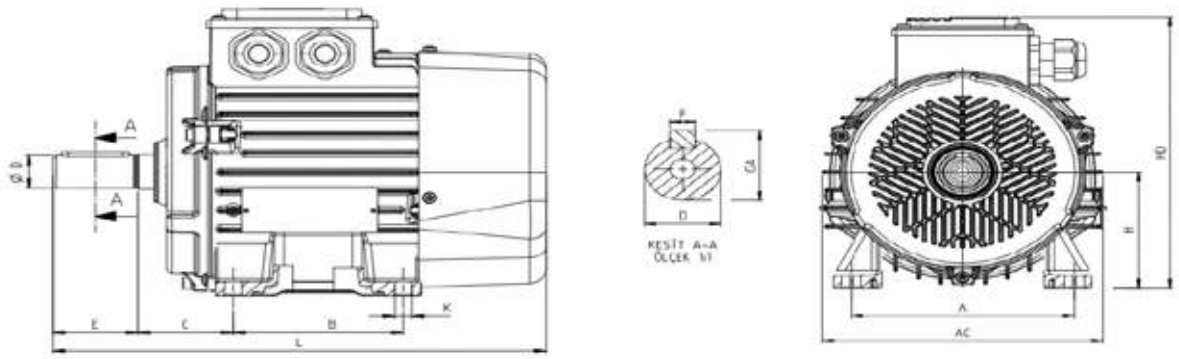

				Main Dimensions			Foot Mounted Motors						Shaft				Bearing		Seal	
Power [kW]	Number of Poles	Motor Type	Housing Type	AC	L	O	B	A	H	HD	K	C	D[1]	E	GA	F[2]	Drive Side	Non drive Side	Drive Side	Non drive Side
0,55	4	Q3N80S4C	Aluminium	156	255,7	M20	100	125	80	187	10	50	19	40	21,5	6	6204-ZZ	6204-ZZ	20*30*7	20*30*7
0,75	2	Q3N80S2C	Aluminium	156	255,7	M20	100	125	80	187	10	50	19	40	21,5	6	6204-ZZ	6204-ZZ	20*30*7	20*30*7
0,75	4	Q3N80S4D	Aluminium	156	255,7	M20	100	125	80	187	10	50	19	40	21,5	6	6204-ZZ	6204-ZZ	20*30*7	20*30*7
1,1	2	Q3N80S2D	Aluminium	156	270,5	M20	100	125	80	187	10	50	19	40	21,5	6	6204-ZZ	6204-ZZ	20*30*7	20*30*7
1,1	4	Q3N90S4C	Aluminium	176	290	M25	100	140	90	210	10	56	24	50	27	8	6205-ZZ	6205-ZZ	25*40*7	25*40*7
1,5	2	Q3N90S2C	Aluminium	176	290	M25	100	140	90	210	10	56	24	50	27	8	6205-ZZ	6205-ZZ	25*40*7	25*40*7
1,5	4	Q3N90L4D	Aluminium	176	320	M25	125	140	90	210	10	56	24	50	27	8	6205-ZZ	6205-ZZ	25*40*7	25*40*7
2,2	2	Q3N90S2D	Aluminium	176	290	M25	100	140	90	210	10	56	24	50	27	8	6205-ZZ	6205-ZZ	25*40*7	25*40*7
2,2	4	Q3N100S4C	Aluminium	196	340	M25	140	160	100	230,5	12	63	28	60	31	8	6206-ZZ	6206-ZZ	30*47*8	30*47*8
3	2	Q3N100S2C	Aluminium	196	340	M25	140	160	100	230,5	12	63	28	60	31	8	6206-ZZ	6206-ZZ	30*47*8	30*47*8
3	4	Q3N100L4D	Aluminium	196	370	M25	140	160	100	230,5	12	63	28	60	31	8	6206-ZZ	6206-ZZ	30*47*8	30*47*8

* According to IEC 60034-2-1
** The sound pressure measurements are taken 1m away from the motor
** Tolerance +3 dBA

DIMENSION - B5, B35

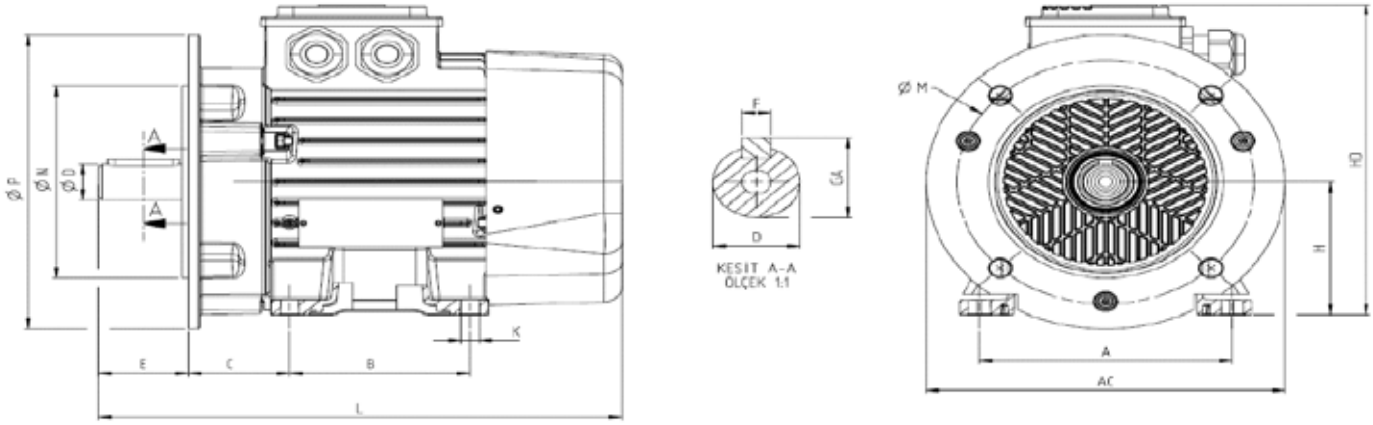

				Main Dimensions			Foot Mounted Motors						Shaft				Bearing		Seal		Flange (FA) (B5)				
Power (kW)	Number of Poles	Motor Type	Housing Type	AC	L	O	B	A	H	HD	K	C	D[1]	E	GA	F[2]	Drive Side	Non drive Side	Drive Side	Non drive Side	P	N[3]	M	R	S
0.55	4	Q3N80S4C	Aluminium	156	255.7	M20	100	125	80	187	10	50	19	40	21.5	6	6204-ZZ	6204-ZZ	20*30*7	20*30*7	198	130	165	-	12
0.75	2	Q3N80S2C	Aluminium	156	255.7	M20	100	125	80	187	10	50	19	40	21.5	6	6204-ZZ	6204-ZZ	20*30*7	20*30*7	198	130	165	-	12
0.75	4	Q3N80S4D	Aluminium	156	255.7	M20	100	125	80	187	10	50	19	40	21.5	6	6204-ZZ	6204-ZZ	20*30*7	20*30*7	198	130	165	-	12
1.1	2	Q3N80S2D	Aluminium	156	255.7	M20	100	125	80	187	10	50	19	40	21.5	6	6204-ZZ	6204-ZZ	20*30*7	20*30*7	198	130	165	-	12
1.1	4	Q3N90S4C	Aluminium	156	255.7	M20	100	125	80	187	10	50	19	40	21.5	6	6204-ZZ	6204-ZZ	20*30*7	20*30*7	198	130	165	-	12
1.5	2	Q3N90S2C	Aluminium	198.9	290	M25	100	140	90	210	10	56	24	50	27	8	6205-ZZ	6205-ZZ	25*40*7	25*40*7	198.9	130	165	-	12
1.5	4	Q3N90L4D	Aluminium	198.9	290	M25	100	140	90	210	10	56	24	50	27	8	6205-ZZ	6205-ZZ	25*40*7	25*40*7	198.9	130	165	-	12
2.2	2	Q3N90S2D	Aluminium	198.9	290	M25	100	140	90	210	10	56	24	50	27	8	6205-ZZ	6205-ZZ	25*40*7	25*40*7	198.9	130	165	-	12
2.2	4	Q3N100S4C	Aluminium	248.9	340	M25	140	160	100	230.5	12	63	28	60	31	8	6206-ZZ	6206-ZZ	30*47*8	30*47*8	248.9	180	215	-	14.5
3	2	Q3N100S2C	Aluminium	248.9	340	M25	140	160	100	230.5	12	63	28	60	31	8	6206-ZZ	6206-ZZ	30*47*8	30*47*8	248.9	180	215	-	14.5
3	4	Q3N100L4D	Aluminium	248.9	370	M25	140	160	100	230.5	12	63	28	60	31	8	6206-ZZ	6206-ZZ	30*47*8	30*47*8	248.9	180	215	-	14.5

* According to IEC 60034-2-1
** The sound pressure measurements are taken 1m away from the motor
** Tolerance +3 dBA

DIMENSION - B14a, B34a

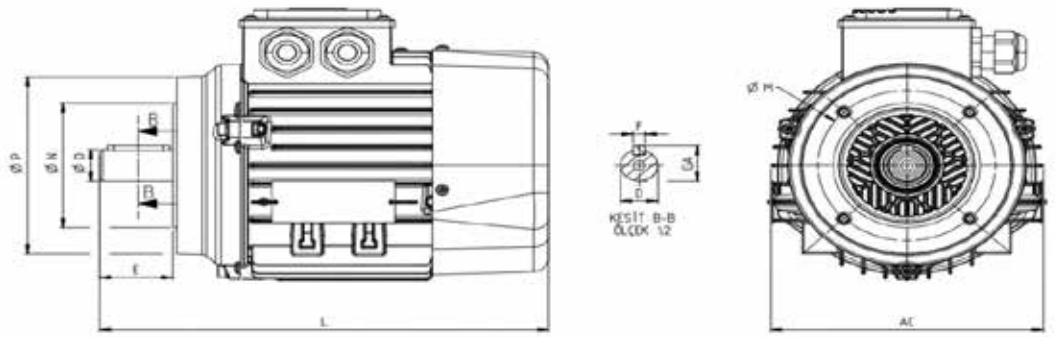

				Main Dimensions			Foot Mounted Motors						Shaft				Bearing		Seal		Flange (FA) (B5)				
Power (kW)	Number of Poles	Motor Type	Housing Type	AC	L	O	B	A	H	HD	K	C	D[1]	E	GA	F[2]	Drive Side	Non drive Side	Drive Side	Non drive Side	P	N[3]	M	R	S
0,55	4	Q3N80S4C	Aluminium	156	255,7	M20	100	125	80	187	10	50	19	40	21,5	6	6204-ZZ	6204-ZZ	20*30*7	20*30*7	116,8	80	100	-	M6
0,75	2	Q3N80S2C	Aluminium	156	255,7	M20	100	125	80	187	10	50	19	40	21,5	6	6204-ZZ	6204-ZZ	20*30*7	20*30*7	116,8	80	100	-	M6
0,75	4	Q3N80S4D	Aluminium	156	255,7	M20	100	125	80	187	10	50	19	40	21,5	6	6204-ZZ	6204-ZZ	20*30*7	20*30*7	116,8	80	100	-	M6
1,1	2	Q3N80S2D	Aluminium	156	255,7	M20	100	125	80	187	10	50	19	40	21,5	6	6204-ZZ	6204-ZZ	20*30*7	20*30*7	116,8	80	100	-	M6
1,1	4	Q3N90S4C	Aluminium	176	290	M25	100	140	90	210	10	56	24	50	27	8	6205-ZZ	6205-ZZ	25*40*7	25*40*7	135	95	115	-	M8
1,5	2	Q3N90S2C	Aluminium	176	290	M25	100	140	90	210	10	56	24	50	27	8	6205-ZZ	6205-ZZ	25*40*7	25*40*7	135	95	115	-	M8
1,5	4	Q3N90L4D	Aluminium	176	320	M25	125	140	90	210	10	56	24	50	27	8	6205-ZZ	6205-ZZ	25*40*7	25*40*7	135	95	115	-	M8
2,2	2	Q3N90S2D	Aluminium	176	290	M25	100	140	90	210	10	56	24	50	27	8	6205-ZZ	6205-ZZ	25*40*7	25*40*7	135	95	115	-	M8
2,2	4	Q3N100S4C	Aluminium	196	340	M25	140	160	100	230,5	12	63	28	60	31	8	6206-ZZ	6206-ZZ	30*47*8	30*47*8	155	110	130	-	M8
3	2	Q3N100S2C	Aluminium	196	340	M25	140	160	100	230,5	12	63	28	60	31	8	6206-ZZ	6206-ZZ	30*47*8	30*47*8	155	110	130	-	M8
3	4	Q3N100L4D	Aluminium	196	370	M25	140	160	100	230,5	12	63	28	60	31	8	6206-ZZ	6206-ZZ	30*47*8	30*47*8	155	110	130	-	M8

* According to IEC 60034-2-1
** The sound pressure measurements are taken 1m away from the motor
** Tolerance +3 dBA

DIMENSION - B14b, B34b

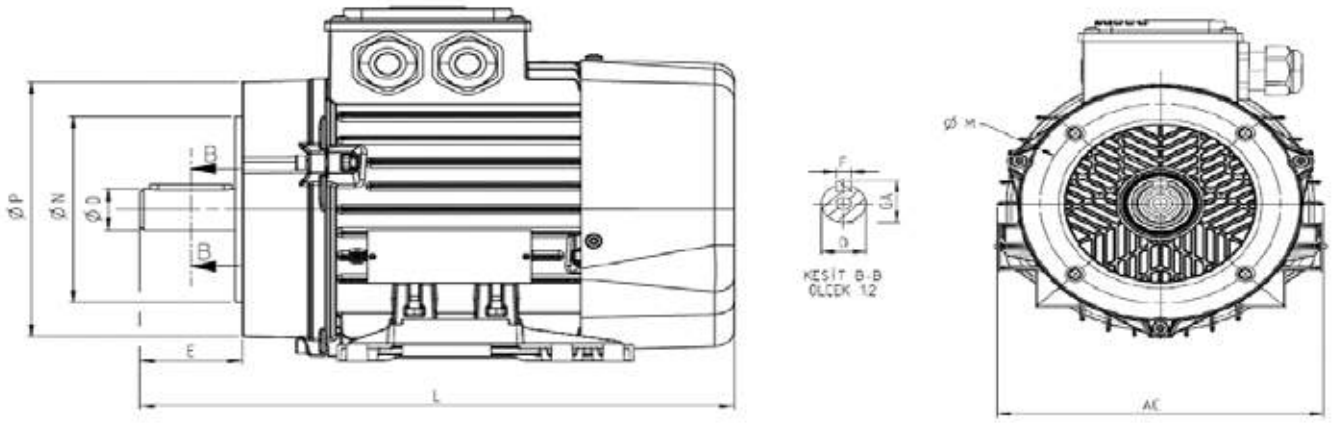

				Main Dimensions			Foot Mounted Motors						Shaft				Bearing		Seal		Flange (FA) (B5)				
Power [kW]	Number of Poles	Motor Type	Housing Type	AC	L	O	B	A	H	HD	K	C	D[1]	E	GA	F[2]	Drive Side	Non drive Side	Drive Side	Non drive Side	P	N[3]	M	R	S
1.1	4	Q3N90S4C40	Aluminium	176	290	M25	100	140	90	210	10	56	24	50	27	8	6205-ZZ	6205-ZZ	25*40*7	25*40*7	150.4	110	130	-	M8
1.5	2	Q3N90S2C40	Aluminium	176	290	M25	100	140	90	210	10	56	24	50	27	8	6205-ZZ	6205-ZZ	25*40*7	25*40*7	150.4	110	130	-	M8
1.5	4	Q3N90L4D40	Aluminium	176	320	M25	125	140	90	210	10	56	24	50	27	8	6205-ZZ	6205-ZZ	25*40*7	25*40*7	150.4	110	130	-	M8
2.2	2	Q3N90S2D40	Aluminium	176	290	M25	100	140	90	210	10	56	24	50	27	8	6205-ZZ	6205-ZZ	25*40*7	25*40*7	150.4	110	130	-	M8

* According to IEC 60034-2-1
** The sound pressure measurements are taken 1m away from the motor
** Tolerance +3 dBA

IE2

ELECTRICAL CHARACTERISTICS AT 50 Hz

	SIZE	MOTOR TYPE	HOUSING TYPE	RATED VALUES					STARTING VALUES				Breakdown Torque Ratio	EFFICIENCY *			Cosφ	J	Weight [B3]	Sound Pressure Level dBA **
				POWER		SPEED	CURRENT	TORQUE	CURRENT I_A / I_N		TORQUE M_A / M_N			η %						
				kW	HP	rpm	A	Nm	λ	Δ	λ	Δ	Mk/ Mn	4/4	3/4	2/4	4/4	kgm²	kg	
		2 pole 3000 rpm																		
230/400V		Q2E63M2A	Aluminium	0,18	1/4	2810	0,4	0,6	4,7	-	2,1	-	2,3	59,1	63,8	58,5	0,85	0,00022	5	52
		Q2E63M2B	Aluminium	0,25	1/3	2820	0,6	0,8	5,6	-	2,7	-	2,7	64,7	66,2	63,5	0,84	0,00025	6	52
		Q2E71M2C	Aluminium	0,37	1/2	2850	0,8	1,2	8,1	-	4,0	-	4,2	69,5	69,6	67,3	0,8	0,00067	8	54
		Q2E71M2D	Aluminium	0,55	3/4	2880	1,2	1,8	8,2	-	4,1	-	4,3	74,1	74,3	74,2	0,82	0,00086	10	54
		Q2H80M2B	Aluminium	0,75	1,00	2850	1,7	2,5	6,4	-	2,8	-	3,3	77,4	77,6	74,4	0,82	0,00111	9	58
		Q2H80M2C	Aluminium	1,10	1,50	2860	2,5	3,7	6,7	-	2,8	-	3,3	79,6	79,8	77,0	0,81	0,00140	11	58
	C	Q2H80M2D	Aluminium	1,50	2,00	2875	3,8	5,0	8,0	-	3,9	-	4,4	81,3	80,4	76,6	0,74	0,00169	12	58
		Q2HS90S2B	Aluminium	1,50	2,00	2875	3,8	5,0	8,0	-	3,9	-	4,4	81,3	80,4	76,6	0,74	0,00176	13	62
	C	Q2H80M2DE	Aluminium	2,20	3,00	2870	4,7	7,3	9,1	-	3,9	-	4,4	83,2	82,8	81,3	0,83	0,00224	16	59
		Q2HS90L2C	Aluminium	2,20	3,00	2870	4,7	7,3	9,1	-	3,9	-	4,4	83,2	82,8	81,3	0,83	0,00231	16	62
	C	Q2H90L2D	Aluminium	3,00	4,00	2887	6,3	9,9	7,3	-	2,4	-	2,9	84,6	85,4	84,2	0,83	0,00283	19	61
		Q2HS100L2B	Aluminium	3,00	4,00	2887	6,3	9,9	7,3	-	2,4	-	2,9	84,6	85,4	84,2	0,83	0,00266	19	66
400/690V	SC	Q2H90L2DE	Aluminium	4,00	5,50	2913	8,2	13,2	3,6	10,8	1,4	4,2	4,8	85,8	87,0	86,1	0,82	0,00385	23	67
	C	Q2HS100L2C	Aluminium	4,00	5,50	2913	8,2	13,2	3,6	10,8	1,4	4,2	4,8	85,8	87,0	86,1	0,82	0,00381	24	66
		Q2HS112M2B	Aluminium	4,00	5,50	2900	8,0	13,2	3,1	9,3	1,1	3,2	4,0	85,8	86,1	84,5	0,85	0,00487	24	68
	SC	Q2H100L2DE	Aluminium	5,50	7,50	2910	10,6	18,1	3,6	10,9	1,3	3,8	4,5	87,0	87,5	86,2	0,86	0,00611	29	62
	C	Q2HS112M2C	Aluminium	5,50	7,50	2910	10,6	18,1	3,6	10,9	1,3	3,8	4,5	87,0	87,5	86,2	0,86	0,00637	29	68
		Q2HS132S2B	Aluminium	5,50	7,50	2915	10,6	18,0	3,5	10,6	1,5	4,4	5,3	87,0	87,1	84,9	0,86	0,00703	34	69
	SC	Q2H100L2E	Aluminium	7,50	10,00	2895	14,1	24,8	3,4	10,3	1,3	3,9	4,6	88,1	89,0	88,7	0,88	0,00724	32	70
	C	Q2HS112M2D	Aluminium	7,50	10,00	2895	14,1	24,8	3,4	10,3	1,3	3,9	4,6	88,1	89,0	88,7	0,88	0,00751	30	68
		Q2HS132S2C	Aluminium	7,50	10,00	2900	14,6	24,7	3,5	10,6	1,3	3,8	4,6	88,1	88,6	87,6	0,85	0,00772	37	69
	C	Q2H132M2A	Aluminium	11,00	15,00	2923	21,3	35,9	3,1	9,2	1,1	3,3	4,8	89,4	89,9	88,4	0,83	0,03489	57	69
		Q2HS160M2C	Aluminium	11,00	15,00	2923	21,2	35,9	3,1	9,2	1,1	3,3	4,8	89,4	89,9	88,4	0,83	0,03517	65	70
	C	Q2H132M2B	Aluminium	15,00	20,00	2915	30,0	49,2	3,2	9,6	1,3	3,9	5,1	90,3	90,6	89,6	0,8	0,03490	65	69
		Q2HS160M2D	Aluminium	15,00	20,00	2915	30,0	49,2	3,2	9,6	1,3	3,9	5,1	90,3	90,6	89,6	0,8	0,04015	67	70
	C	Q2H132M2C	Aluminium	18,50	25,00	2930	30,8	60,3	2,7	8,0	0,6	1,9	3,6	90,9	91,7	91,1	0,95	0,04685	77	70
		Q2HS160L2A	Aluminium	18,50	25,00	2930	30,8	60,3	2,7	8,0	0,6	1,9	3,6	90,9	91,7	91,1	0,95	0,04613	79	70
	C	Q2H160L2C	Aluminium	22,00	30,00	2955	40,9	71,2	3,5	10,4	1,2	3,6	5,2	91,3	92,0	90,7	0,84	0,04808	96	71
		Q2HS180M2A	Aluminium	22,00	30,00	2955	40,9	71,2	3,5	10,6	1,2	3,6	5,2	91,3	92,0	90,7	0,84	0,05141	100	77
	SC	Q2H160L2DE	Aluminium	30,00	37,00	2940	19,6	97,4	3,0	9,1	0,8	2,3	2,8	92,0	92,8	92,1	0,94	0,06270	108	80
	C	Q2H180M2B	Aluminium	30,00	37,00	2955	51,5	97,1	2,8	8,5	0,8	2,4	3,6	92,0	92,5	91,8	0,91	0,08643	128	77
		Q2H200L2B	Aluminium	30,00	40,00	2955	51,5	97,1	2,8	8,5	0,8	2,4	3,6	92,0	92,5	91,8	0,91	0,08644	175	78
	C	Q2H180M2C	Aluminium	37,00	50,00	2965	66,2	119,6	3,4	10,1	1,0	3,1	4,5	92,5	92,5	91,2	0,87	0,10277	145	77
		Q2H200L2C	Aluminium	37,00	50,00	2965	66,2	119,6	3,4	10,1	1,0	3,1	4,5	92,5	92,5	91,2	0,87	0,10277	175	78
	SC	Q2H180L2D	Aluminium	45,00	60,00	2958	76,0	145,1	3,3	9,8	0,9	2,8	5,3	92,9	93,4	92,7	0,92	0,11383	162	76
	C	Q2H200L2D	Aluminium	45,00	60,00	2960	76,0	145,1	3,3	9,8	0,9	2,8	5,3	92,9	93,4	92,7	0,92	0,11910	166	78
		Q2E225M2A	Aluminium	45,00	60,00	2960	82,1	145,2	2,9	8,7	0,8	2,4	2,9	92,9	92,6	91,1	0,85	0,23500	235	81
	SC	Q2H200L2E	Aluminium	55,00	75,00	2960	90,7	177,4	3,1	9,3	0,7	2,0	4,2	93,2	93,3	92,8	0,93	0,10988	194	77
	C	Q2E225M2C	Aluminium	55,00	75,00	2970	96,6	176,9	3,5	10,6	1,0	3,0	7,1	93,2	93,7	92,4	0,88	0,29500	244	80
		Q2E225M2A	Aluminium	55,00	75,00	2975	93,9	176,5	3,3	9,8	1,0	3,0	5,3	93,2	93,1	92,4	0,89	0,42083	254	81

* According to IEC 60034-2-1
** The sound pressure measurements are taken 1m away from the motor
** Tolerance +3 dBA

	SIZE	MOTOR TYPE	HOUSING TYPE	RATED VALUES					STARTING VALUES				Breakdown Torque Ratio	EFFICIENCY *			Cosφ	J	Weight [B3]	Sound Pressure Level dBA **
				POWER		SPEED	CURRENT	TORQUE	CURRENT I_A / I_N		TORQUE M_A / M_N			η %						
				kW	HP	rpm	A	Nm	λ	Δ	λ	Δ	Mk/ Mn	4/4	3/4	2/4	4/4	kgm²	kg	
		4 pole 1500 rpm																		
230/400V		Q2E63M4A	Aluminium	0,12	1/6	1420	0,5	0,9	3,4	-	2,2	-	3,2	64,0	54,1	44,9	0,56	0,00022	5	41
		Q2E63M4B	Aluminium	0,18	1/4	1400	0,6	1,2	3,7	-	2,7	-	3,0	68,0	60,0	51,3	0,66	0,00026	6	41
		Q2E71M4C	Aluminium	0,25	1/3	1415	0,6	1,7	4,6	-	2,6	-	3,8	68,5	68,8	66,9	0,7	0,00095	9	45
		Q2E71M4D	Aluminium	0,37	1/2	1425	1,1	2,5	4,6	-	2,6	-	3,8	72,7	73,1	72,0	0,71	0,00095	9	45
		Q2H80M4B	Aluminium	0,55	3/4	1435	1,3	3,6	6,4	-	2,3	-	3,2	77,1	78,8	75,4	0,76	0,00175	10	49
		Q2H80M4C	Aluminium	0,75	1,00	1440	1,8	5,0	5,5	-	2,1	-	2,6	79,6	80,0	77,7	0,76	0,00216	11	49
	C	Q2H80M4D	Aluminium	1,10	1,50	1430	2,5	7,4	5,7	-	2,2	-	2,6	81,4	82,4	81,6	0,8	0,00260	12	48
		Q2HS90S4B	Aluminium	1,10	1,50	1430	2,5	7,4	5,7	-	2,2	-	2,6	81,4	82,4	81,6	0,8	0,00267	13	54
	C	Q2H80M4DE	Aluminium	1,50	2,00	1427	3,3	10,0	6,4	-	2,5	-	3,1	82,8	84,2	83,7	0,79	0,00306	14	48
		Q2HS90L4C	Aluminium	1,50	2,00	1427	3,3	10,0	6,4	-	2,5	-	3,1	82,8	84,2	83,7	0,79	0,00328	15	54
	C	Q2H90L4D	Aluminium	2,20	3,00	1437	5,3	14,6	7,6	-	3,6	-	4,2	84,3	84,1	81,5	0,72	0,00526	18	52
		Q2HS100L4B	Aluminium	2,20	3,00	1437	5,3	14,6	7,6	-	3,6	-	4,2	84,3	84,1	81,5	0,72	0,00521	21	55
	C	Q2H90L4DE	Aluminium	3,00	4,00	1440	7,4	20,0	6,5	-	3,3	-	3,7	85,5	85,3	83,0	0,7	0,00690	25	53
		Q2HS100L4C	Aluminium	3,00	4,00	1440	7,4	20,0	6,5	-	3,3	-	3,7	85,5	85,3	83,0	0,7	0,00694	25	55
400/690V	C	Q2H100L4D	Aluminium	4,00	5,50	1440	8,7	26,6	2,7	8,0	1,1	3,2	3,8	86,6	85,7	83,5	0,78	0,01058	31	57
		Q2HS112M4C	Aluminium	4,00	5,50	1440	8,7	26,6	2,7	8,0	1,1	3,2	3,8	86,6	85,7	83,5	0,78	0,01085	31	58
	C	Q2H112M4D	Aluminium	5,50	7,50	1445	11,6	35,5	2,7	8,0	1,0	3,0	3,8	87,7	88,3	87,3	0,79	0,01382	38	58
		Q2HS132S4A	Aluminium	5,50	7,50	1445	11,5	35,5	2,7	8,0	1,0	3,0	3,8	87,7	88,3	87,3	0,79	0,01414	38	59
		Q2H132M4C	Aluminium	7,50	10,00	1460	15,0	49,1	2,4	7,1	0,5	1,5	0,6	88,7	89,4	88,7	0,82	0,03560	54	62
	C	Q2H132M4D	Aluminium	11,00	15,00	1468	21,6	71,5	2,6	7,9	0,7	2,1	3,6	89,8	91,1	90,3	0,81	0,05440	76	61
		Q2HS160M4B	Aluminium	11,00	15,00	1468	21,6	71,5	2,6	7,9	0,7	2,1	3,6	89,8	91,1	90,3	0,81	0,05468	79	63
	C	Q2H132M4E	Aluminium	15,00	20,00	1462	29,8	98,0	2,6	7,8	0,6	1,8	3,4	90,6	91,4	90,9	0,8	0,05940	81	63
		Q2HS160L4A	Aluminium	15,00	20,00	1462	29,8	98,0	2,6	7,8	0,6	1,8	3,4	90,6	91,4	90,9	0,8	0,05940	83	63
	C	Q2H160L4B	Aluminium	18,50	25,00	1470	36,0	120,2	2,3	6,8	0,7	2,2	2,9	91,2	92,0	91,6	0,81	0,09005	101	57
		Q2HS180M4A	Aluminium	18,50	25,00	1470	36,0	120,2	2,3	6,8	0,7	2,2	2,9	91,2	92,0	91,6	0,81	0,10513	110	67
	C	Q2H160L4C	Aluminium	22,00	30,00	1462	41,8	143,8	1,8	5,5	0,6	1,9	2,8	91,6	92,9	93,3	0,84	0,11068	115	58
		Q2HS180L4B	Aluminium	22,00	30,00	1462	41,8	143,8	1,8	5,5	0,6	1,9	2,8	91,6	92,9	93,3	0,84	0,11398	118	67
	C	Q2H180L4C	Aluminium	30,00	40,00	1475	55,3	194,6	2,7	8,2	0,9	2,7	3,5	92,0	91,9	91,4	0,85	0,14694	143	70
		Q2H200L4C	Aluminium	30,00	40,00	1475	55,3	194,6	2,7	8,2	0,9	2,7	3,5	92,0	91,9	91,4	0,85	0,18660	195	70
	SC	Q2H180L4A	Aluminium	37,00	40,00	1476	72,5	240,8	2,8	8,3	0,9	2,7	3,7	92,7	93,2	92,8	0,79	0,22165	194	70
	C	Q2H200L4D	Aluminium	37,00	50,00	1476	72,5	240,8	2,8	8,3	0,9	2,8	3,7	92,7	93,2	92,8	0,79	0,26440	177	71
		Q2E225M4A	Aluminium	37,00	50,00	1480	68,3	238,8	3,0	9,1	1,2	3,6	4,0	92,7	92,6	91,3	0,84	0,36420	263	71
		Q2E225M4B	Aluminium	45,00	60,00	1480	81,5	290,5	3,1	9,4	1,2	3,7	3,0	93,1	93,0	91,9	0,85	0,43500	280	71

ELECTRICAL CHARACTERISTICS AT 50 Hz

	SIZE	MOTOR TYPE	HOUSING TYPE	RATED VALUES					STARTING VALUES				Breakdown Torque Ratio	EFFICIENCY *			Cosφ	J	Weight [B3]	Sound Pressure Level dBA **
				POWER		SPEED	CURRENT	TORQUE	CURRENT		TORQUE			η %						
									I_A / I_N		M_A / M_N									
				kW	HP	rpm	A	Nm	λ	Δ	λ	Δ	Mk/ Mn	4/4	3/4	2/4	4/4	kgm²	kg	
		6 pole 1000 rpm																		
230/400V		Q2H90S6B	Aluminium	0.75	1.00	943	1.8	7.7	4.6	-	2.1	-	2.7	75.9	75.1	71.4	0.69	0.00383	16	53
230/400V		Q2H90L6C	Aluminium	1.10	1.50	938	3.0	11.2	2.8	-	2.4	-	2.8	78.1	78.0	75.1	0.69	0.00464	18	53
230/400V		Q2H100L6C	Aluminium	1.50	2.00	955	4.0	15.2	3.3	-	2.6	-	3.2	79.8	79.3	76.3	0.67	0.00871	26	56
230/400V		Q2H112M6C	Aluminium	2.20	3.00	942	5.4	22.4	5.2	-	2.0	-	2.6	81.8	81.5	79.5	0.72	0.00936	31	58
400/690V		Q2H132M6A	Aluminium	3.00	4.00	965	14.1	29.8	1.8	5.4	1.1	3.2	3.3	83.3	82.3	79.4	0.64	0.02950	47	62
400/690V		Q2H132M6B	Aluminium	4.00	5.50	970	10.4	39.8	1.9	5.8	0.7	2.2	2.6	84.6	83.5	80.7	0.65	0.03560	53	61
400/690V		Q2H132M6C	Aluminium	5.50	7.50	960	12.8	54.7	1.7	5.2	0.9	2.6	2.9	86.1	85.7	83.9	0.72	0.06420	67	60
400/690V		Q2H160M6B	Aluminium	7.50	10.00	970	18.9	74.6	2.1	6.2	1.2	3.6	3.8	87.2	84.3	81.7	0.66	0.07540	88	63
400/690V		Q2H160L6C	Aluminium	11.00	15.00	970	25.5	109.4	1.7	5.2	1.0	3.0	3.1	88.7	88.5	86.3	0.71	0.07040	99	63
400/690V		Q2H180L6A	Aluminium	15.00	20.00	970	31.5	146.9	1.8	5.1	0.6	1.8	2.0	89.7	89.5	87.3	0.76	0.16677	115	69
400/690V		Q2H200L6B	Aluminium	18.50	25.00	981	41.6	179.8	2.0	5.9	0.7	2.1	2.6	90.4	90.5	89.6	0.7	0.18660	160	70
400/690V		Q2H200L6C	Aluminium	22.00	30.00	982	48.8	214.5	1.8	5.6	0.8	2.3	2.4	90.9	91.0	90.3	0.72	0.20643	171	70
400/690V		Q2E225M6B	Aluminium	30.00	40.00	975	57.0	287.6	1.9	5.7	0.6	1.7	2.5	91.7	91.6	90.7	0.83	0.49334	234	66

* According to IEC 60034-2-1
** The sound pressure measurements are taken 1m away from the motor
** Tolerance +3 dBA

DIMENSION - B3

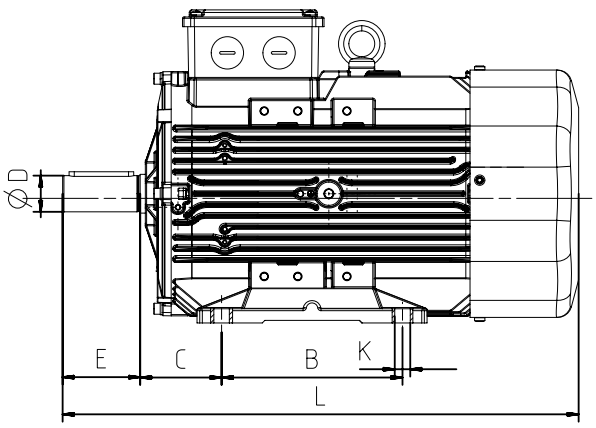

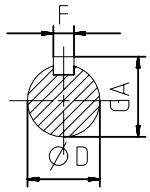

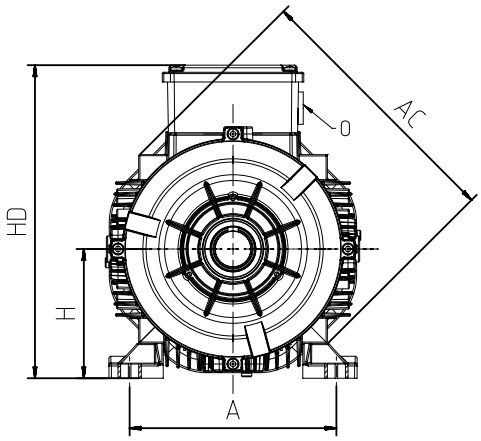

					Main Dimensions			Foot Mounted Motors						Shaft				Bearing		Seal	
SIZE	Power [kW]	Number of Poles	Motor Type	Housing Type	AC	L	O	B	A	H	HD	K	C	D[1]	E	GA	F[2]	Drive Side	Non drive Side	Drive Side	Non drive Side
	0,12	4	Q2E63M4A	Aluminium	123	220	1xM20	80	100	63	162	7	40	11	23	12,5	4	6201-ZZ	6201-ZZ	12*22*7	12*22*7
	0,18	2	Q2E63M2A	Aluminium	123	220	1xM20	80	100	63	162	7	40	11	23	12,5	4	6201-ZZ	6201-ZZ	12*22*7	12*22*7
	0,18	4	Q2E63M4B	Aluminium	123	220	1xM20	80	100	63	162	7	40	11	23	12,5	4	6201-ZZ	6201-ZZ	12*22*7	12*22*7
	0,25	2	Q2E63M2B	Aluminium	123	220	1xM20	80	100	63	162	7	40	11	23	12,5	4	6201-2Z	6201-2Z	12*22*7	12*22*7
	0,25	4	Q2E71M4C	Aluminium	138	253	1xM20	90	112	71	190	7	45	14	30	16	5	6202-ZZ	6202-ZZ	15*24*5	15*24*5
	0,37	2	Q2E71M2C	Aluminium	138	253	1xM20	90	112	71	190	7	45	14	30	16	5	6202-ZZ	6202-ZZ	15*24*5	15*24*5
	0,37	4	Q2E71M4D	Aluminium	138	253	1xM20	90	112	71	190	7	45	14	30	16	5	6202-ZZ	6202-ZZ	15*24*5	15*24*5
	0,55	2	Q2E71M2D	Aluminium	138	253	1xM20	90	112	71	190	7	45	14	30	16	5	6202-ZZ	6202-ZZ	15*24*5	15*24*5
	0,55	4	Q2H80M4B	Aluminium	158	268	1xM20	100	125	80	216	10	50	19	40	21,5	6	6204-ZZ	6204-ZZ	20*30*7	20*30*7
	0,75	2	Q2H80M2B	Aluminium	158	268	1xM20	100	125	80	216	10	50	19	40	21,5	6	6204-ZZ	6204-ZZ	20*30*7	20*30*7
	0,75	4	Q2H80M4C	Aluminium	158	268	1xM20	100	125	80	216	10	50	19	40	21,5	6	6204-ZZ	6204-ZZ	20*30*7	20*30*7
	0,75	6	Q2H90S6B	Aluminium	172	344	1xM25	100-125	140	90	223	10	56	24	50	27	8	6305-ZZ	6205-ZZ	25*40*7	25*40*7
	1,1	2	Q2H80M2C	Aluminium	158	268	1xM20	100	125	80	216	10	50	19	40	21,5	6	6204-ZZ	6204-ZZ	20*30*7	20*30*7
C	1,1	4	Q2H80M4D	Aluminium	158	268	1xM20	100	125	80	216	10	50	19	40	21,5	6	6204-ZZ	6204-ZZ	20*30*7	20*30*7
	1,1	4	Q2HS90S4B	Aluminium	158	278	1xM25	100-125	140	90	213	10	56	24	50	27	8	6305-ZZ	6204-ZZ	25*40*7	20*30*7
	1,1	6	Q2H90L6C	Aluminium	172	344	1xM25	100-125	140	90	223	10	56	24	50	27	8	6305-ZZ	6205-ZZ	25*40*7	25*40*7
C	1,5	2	Q2H80M2D	Aluminium	158	268	1xM20	100	125	80	216	10	50	19	40	21,5	6	6204-ZZ	6204-ZZ	20*30*7	20*30*7
	1,5	2	Q2HS90S2B	Aluminium	158	278	1xM25	100-125	140	90	213	10	56	24	50	27	8	6305-ZZ	6204-ZZ	25*40*7	20*30*7
C	1,5	4	Q2H80M4DE	Aluminium	158	268	1xM20	100	125	80	216	10	50	19	40	21,5	6	6204-ZZ	6204-ZZ	20*30*7	20*30*7
	1,5	4	Q2HS90L4C	Aluminium	158	303	1xM25	100-125	140	90	213	10	56	24	50	27	8	6305-ZZ	6204-ZZ	25*40*7	20*30*7
	1,5	6	Q2H100L6C	Aluminium	191	400	1xM25	140	160	100	243	12	63	28	60	31	8	6306-ZZ	6205-ZZ	30*47*7	30*47*7
C	2,2	2	Q2H80M2DE	Aluminium	158	268	1xM20	100	125	80	216	10	50	19	40	21,5	6	6204-ZZ	6204-ZZ	20*30*7	20*30*7
	2,2	2	Q2HS90L2C	Aluminium	158	303	1xM25	100-125	140	90	213	10	56	24	50	27	8	6305-ZZ	6204-ZZ	25*40*7	20*30*7
C	2,2	4	Q2H90L4D	Aluminium	172	344	1xM25	100-125	140	90	223	10	56	24	50	27	8	6305-ZZ	6205-ZZ	25*40*7	25*40*7
	2,2	4	Q2HS100L4B	Aluminium	172	349	1xM25	140	160	100	233	12	63	28	60	31	8	6306-ZZ	6205-ZZ	30*47*7	25*40*7
	2,2	6	Q2H112M6C	Aluminium	210	396	1xM25	140	190	112	265	12	70	28	60	31	8	6306-ZZ	6206-ZZ	30*47*7	30*47*7
C	3	2	Q2H90L2D	Aluminium	172	344	1xM25	100-125	140	90	223	10	56	24	50	27	8	6305-ZZ	6205-ZZ	25*40*7	25*40*7
	3	2	Q2HS100L2B	Aluminium	172	349	1xM25	140	160	100	233	12	63	28	60	31	8	6306-ZZ	6205-ZZ	30*47*7	25*40*7
C	3	4	Q2H90L4DE	Aluminium	172	379	1xM25	100-125	140	90	223	10	56	24	50	27	8	6305-ZZ	6205-ZZ	25*40*7	25*40*7
	3	4	Q2HS100L4C	Aluminium	172	384	1xM25	140	160	100	233	12	63	28	60	31	8	6306-ZZ	6205-ZZ	30*47*7	25*40*7
	3	6	Q2H132M6A	Aluminium	260	481	1xM32	140-178	216	132	312	12	89	38	80	41	10	6208-ZZ	6208-ZZ	40*62*10	40*62*10

(1) Tolerance DIN EN 50347 "j6" up to 28mm, "k6" above 28mm
(2) According to DIN 6885

IE2 THREE PHASE ALUMINIUM MOTORS

					Main Dimensions			Foot Mounted Motors						Shaft				Bearing		Seal	
SIZE	Power (kW)	Number of Poles	Motor Type	Housing Type	AC	L	O	B	A	H	HD	K	C	D[1]	E	GA	F[2]	Drive Side	Non drive Side	Drive Side	Non drive Side
SC	4	2	Q2H90L2DE	Aluminium	172	379	1xM25	100-125	140	90	223	10	56	24	50	27	8	6305-ZZ	6205-ZZ	25*40*7	25*40*7
C	4	2	Q2HS100L2C	Aluminium	172	384	1xM25	140	160	100	233	12	63	28	60	31	8	6306-ZZ	6205-ZZ	30*47*7	25*40*7
	4	2	Q2HS112M2B	Aluminium	191	399	1xM25	140	190	112	254	12	70	28	60	31	8	6306-ZZ	6205-ZZ	30*47*7	25*40*7
C	4	4	Q2H100L4D	Aluminium	191	400	1xM25	140	160	100	243	12	63	28	60	31	8	6306-ZZ	6205-ZZ	30*47*7	25*40*7
	4	4	Q2HS112M4C	Aluminium	191	399	1xM25	140	190	112	254	12	70	28	60	31	8	6306-ZZ	6205-ZZ	30*47*7	25*40*7
	4	6	Q2H132M6B	Aluminium	260	481	1xM32	140-178	216	132	312	12	89	38	80	41	10	6208-ZZ	6208-ZZ	40*62*10	40*62*10
SC	5.5	2	Q2H100L2DE	Aluminium	191	400	1xM25	140	160	100	243	12	63	28	60	31	8	6306-ZZ	6205-ZZ	30*47*7	30*47*7
C	5.5	2	Q2HS112M2C	Aluminium	191	399	1xM25	140	190	112	254	12	70	28	60	31	8	6306-ZZ	6205-ZZ	30*47*7	25*40*7
	5.5	2	Q2HS132S2B	Aluminium	210	422	1xM25	140-178	216	132	283	12	89	38	80	41	10	6208-ZZ	6206-ZZ	40*62*10	30*47*7
C	5.5	4	Q2H112M4D	Aluminium	210	421	1xM25	140	190	112	265	12	70	28	60	31	8	6306-ZZ	6206-ZZ	30*47*7	30*47*7
	5.5	4	Q2HS132S4A	Aluminium	210	422	1xM25	140-178	216	132	283	12	89	38	80	41	10	6208-2Z	6206-2Z	40*62*10	30*47*7
	5.5	6	Q2H132M6C	Aluminium	260	481	1xM32	140-178	216	132	312	12	89	38	80	41	10	6208-ZZ	6208-ZZ	40*62*10	40*62*10
SC	7.5	2	Q2H100L2E	Aluminium	191	422	1xM25	140	160	100	243	12	63	28	60	31	8	6306-ZZ	6205-ZZ	30*47*7	30*47*7
C	7.5	2	Q2HS112M2D	Aluminium	191	421	1xM25	140	190	112	254	12	70	28	60	31	8	6306-ZZ	6205-ZZ	30*47*7	25*40*7
	7.5	2	Q2HS132S2C	Aluminium	210	422	1xM25	140-178	216	132	283	12	89	38	80	41	10	6208-ZZ	6206-ZZ	40*62*10	30*47*7
	7.5	4	Q2H132M4C	Aluminium	260	481	1xM32	140-178	216	132	312	12	89	38	80	41	10	6208-ZZ	6208-ZZ	40*62*10	40*62*10
	7.5	6	Q2H160M6B	Aluminium	305	591	1xM32	210-254	254	160	368	14.5	108	42	110	45	12	6309-ZZ	6209-ZZ	45*72*10	45*72*10
C	11	2	Q2H132M2A	Aluminium	260	481	1xM32	140-178	216	132	312	12	89	38	80	41	10	6208-ZZ	6208-ZZ	40*62*10	40*62*10
	11	2	Q2HS160M2C	Aluminium	260	520	1xM32	210-254	254	160	351	14.5	108	42	110	45	12	6309-ZZ	6208-ZZ	45*72*10	40*62*10
C	11	4	Q2H132M4D	Aluminium	260	481	1xM32	140-178	216	132	312	12	89	38	80	41	10	6208-ZZ	6208-ZZ	40*62*10	40*62*10
	11	4	Q2HS160M4B	Aluminium	260	520	1xM32	210-254	254	160	351	14.5	108	42	110	45	12	6309-ZZ	6208-ZZ	45*72*10	40*62*10
	11	6	Q2H160L6C	Aluminium	305	591	1xM32	210-254	254	160	368	14.5	108	42	110	45	12	6309-ZZ	6209-ZZ	45*72*10	45*72*10
C	15	2	Q2H132M2B	Aluminium	260	481	1xM32	140-178	216	132	312	12	89	38	80	41	10	6208-ZZ	6208-ZZ	40*62*10	40*62*10
	15	2	Q2HS160M2D	Aluminium	260	520	1xM32	210-254	254	160	351	14.5	108	42	110	45	12	6309-ZZ	6208-ZZ	45*72*10	40*62*10
C	15	4	Q2H132M4E	Aluminium	260	539	1xM32	140-178	216	132	312	12	89	38	80	41	10	6208-ZZ	6208-ZZ	40*62*10	40*62*10
	15	4	Q2HS160L4A	Aluminium	260	520	1xM32	210-254	254	160	351	14.5	108	42	110	45	12	6309-ZZ	6208-ZZ	45*72*10	40*62*10
	15	6	Q2H180L6A	Aluminium	349	696	1xM40	241-279	279	180	437	14.5	121	48	110	51.5	14	6310-ZZ	6310-ZZ	50*80*10	50*80*10
C	18.5	2	Q2H132M2C	Aluminium	260	539	1xM32	140-178	216	132	312	12	89	38	80	41	10	6208-ZZ	6208-ZZ	40*62*10	40*62*10
	18.5	2	Q2HS160L2A	Aluminium	260	520	1xM32	210-254	254	160	351	14.5	108	42	110	45	12	6309-ZZ	6208-ZZ	45*72*10	40*62*10
C	18.5	4	Q2H160L4B	Aluminium	305	591	1xM32	210-254	254	160	368	14.5	108	42	110	45	12	6309-ZZ	6209-ZZ	45*72*10	45*72*10
	18.5	4	Q2HS180M4A	Aluminium	305	596	1xM32	241-279	279	180	398	14.5	121	48	110	51.5	14	6310-ZZ	6209-ZZ	50*80*10	45*72*10
	18.5	6	Q2H200L6B	Aluminium	349	706	1xM50	305	318	200	455	18.5	133	55	110	59	16	6312-ZZ	6310-ZZ	60*90*10	60*90*10
C	22	2	Q2H160L2C	Aluminium	305	591	1xM32	210-254	254	160	368	14.5	108	42	110	45	12	6309-ZZ	6209-ZZ	45*72*10	45*72*10
	22	2	Q2HS180M2A	Aluminium	305	596	1xM32	241-279	279	180	398	14.5	121	48	110	51.5	14	6310-ZZ	6209-ZZ	50*80*10	45*72*10
C	22	4	Q2H160L4C	Aluminium	305	591	1xM32	210-254	254	160	368	14.5	108	42	110	45	12	6309-ZZ	6209-ZZ	45*72*10	45*72*10
	22	4	Q2HS180L4B	Aluminium	305	596	1xM32	241-279	279	180	398	14.5	121	48	110	51.5	14	6310-ZZ	6209-ZZ	50*80*10	45*72*10
	22	6	Q2H200L6C	Aluminium	349	706	1xM50	267-305	318	200	455	18.5	133	55	110	59	16	6312-ZZ	6310-ZZ	60*90*10	60*90*10

					Main Dimensions			Foot Mounted Motors						Shaft				Bearing		Seal	
SIZE	Power [kW]	Number of Poles	Motor Type	Housing Type	AC	L	O	B	A	H	HD	K	C	D[1]	E	GA	F[2]	Drive Side	Non drive Side	Drive Side	Non drive Side
SC	30	2	Q2H160L2DE	Aluminium	305	591	1xM32	210-254	254	160	368	14,5	108	42	110	45	12	6309-ZZ	6209-ZZ	45*72*10	45*72*10
C	30	2	Q2H180M2B	Aluminium	349	696	1xM40	241-279	279	180	437	14,5	121	48	110	51,5	14	6310-ZZ	6310-ZZ	50*80*10	50*80*10
	30	2	Q2H200L2B	Aluminium	349	706	1xM50	267-305	318	200	455	18,5	133	55	110	59	16	6312-ZZ	6310-ZZ	60*90*10	60*90*10
C	30	4	Q2H180L4C	Aluminium	349	696	1xM40	241-279	279	180	437	14,5	121	48	110	51,5	14	6310-ZZ	6310-ZZ	50*80*10	50*80*10
	30	4	Q2H200L4C	Aluminium	349	706	1xM50	267-305	318	200	455	18,5	133	55	110	59	16	6312-ZZ	6310-ZZ	60*90*10	60*90*10
	30	6	Q2E225M6B	Aluminium	456	765	1xM50	286-311	356	225	485	18,5	149	60	140	64	18	6313-ZZ	6313-ZZ	65*100*13	65*100*13
C	37	2	Q2H180M2C	Aluminium	349	696	1xM40	241-279	279	180	437	14,5	121	48	110	51,5	14	6310-ZZ	6310-ZZ	50*80*10	50*80*10
	37	2	Q2H200L2C	Aluminium	349	706	1xM50	305	318	200	455	18,5	133	55	110	59	16	6312-ZZ	6310-ZZ	60*90*10	60*90*10
SC	37	4	Q2H180L4A	Aluminium	349	696	1xM40	241-279	279	180	398	14,5	121	48	110	51,5	14	6310-ZZ	6310-ZZ	50*80*10	50*80*10
C	37	4	Q2H200L4D	Aluminium	349	759	1xM50	267-305	318	200	455	18,5	133	55	110	59	16	6312-ZZ	6310-ZZ	60*90*10	60*90*10
	37	4	Q2E225M4A	Aluminium	456	765	1xM50	286-311	356	225	485	18,5	149	60	140	64	18	6313-ZZ	6313-ZZ	65*100*13	65*100*13
SC	45	2	Q2H180L2D	Aluminium	349	696	1xM40	241-279	279	180	437	14,5	121	48	110	51,5	14	6310-ZZ	6310-ZZ	50*80*10	50*80*10
C	45	2	Q2H200L2D	Aluminium	349	759	1xM50	267-305	318	200	455	18,5	133	55	110	59	16	6312-ZZ	6310-ZZ	60*90*10	60*90*10
	45	2	Q2E225M2A	Aluminium	456	735	1xM50	286-311	356	225	485	18,5	149	55	110	59	16	6313-ZZ	6313-ZZ	65*100*13	65*100*13
	45	4	Q2E225M4B	Aluminium	456	765	1xM50	286-311	356	225	485	18,5	149	60	140	64	18	6313-ZZ	6313-ZZ	65*100*13	65*100*13
SC	55	2	Q2H200L2E	Aluminium	349	759	1xM50	267-305	318	200	455	22,5	133	55	110	59	16	6312-ZZ	6310-ZZ	60*90*10	50*80*10
C	55	2	Q2E225M2C	Aluminium	456	735	1xM50	286-311	356	225	485	18,5	149	55	110	59	16	6313-ZZ	6313-ZZ	65*100*13	65*100*13
	55	2	Q2E250M2A	Aluminium	527	886	2*M50	349	406	250	615	24	149	60	140	64	18	6315-2Z	6313-2Z	75*112*12	65*100*13

(1) Tolerance DIN EN 50347 “j6” up to 28mm, “k6” above 28mm
(2) According to DIN 6885

IE2 THREE PHASE ALUMINIUM MOTORS

DIMENSION - B5, B35

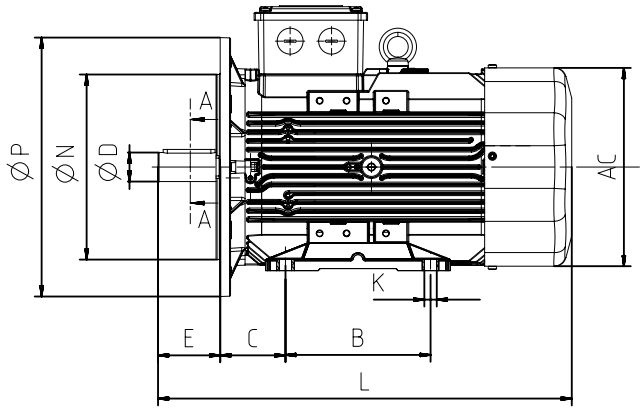

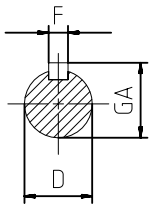

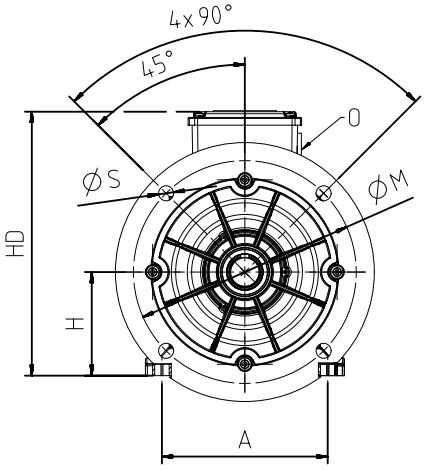

					Main Dimensions			Foot Mounted Motors					Shaft				Bearing		Seal		Flange (FA) (B5)				
SIZE	Power (kW)	Number of Poles	Motor Type	Housing Type	AC	L	O	B	A	H	HD	K	D[1]	E	GA	F[2]	Drive Side	Non drive Side	Drive Side	Non drive Side	P	N[3]	M	R	S
	0,12	4	Q2E63M4A	Aluminium	123	220	1xM20	80	100	63	162	7	11	23	12,5	4	6201-ZZ	6201-ZZ	12*22*7	12*22*7	140	95	115	-	10
	0,18	2	Q2E63M2A	Aluminium	123	220	1xM20	80	100	63	162	7	11	23	12,5	4	6201-ZZ	6201-ZZ	12*22*7	12*22*7	140	95	115	-	10
	0,18	4	Q2E63M4B	Aluminium	123	220	1xM20	80	100	63	162	7	11	23	12,5	4	6201-ZZ	6201-ZZ	12*22*7	12*22*7	140	95	115	-	10
	0,25	2	Q2E63M2B	Aluminium	123	220	1xM20	80	100	63	162	7	11	23	12,5	4	6201-2Z	6201-2Z	12*22*7	12*22*7	140	95	115	-	10
	0,25	4	Q2E71M4C	Aluminium	138	253	1xM20	90	112	71	190	7	14	30	16	5	6202-ZZ	6202-ZZ	15*24*5	15*24*5	160	110	130	-	10
	0,37	2	Q2E71M2C	Aluminium	138	253	1xM20	90	112	71	190	7	14	30	16	5	6202-ZZ	6202-ZZ	15*24*5	15*24*5	160	110	130	-	10
	0,37	4	Q2E71M4D	Aluminium	138	253	1xM20	90	112	71	190	7	14	30	16	5	6202-ZZ	6202-ZZ	15*24*5	15*24*5	160	110	130	-	10
	0,55	2	Q2E71M2D	Aluminium	138	253	1xM20	90	112	71	190	7	14	30	16	5	6202-ZZ	6202-ZZ	15*24*5	15*24*5	160	110	130	-	10
	0,55	4	Q2H80M4B	Aluminium	158	268	1xM20	100	125	80	216	10	19	40	21,5	6	6204-ZZ	6204-ZZ	20*30*7	20*30*7	200	130	165	-	12
	0,75	2	Q2H80M2B	Aluminium	158	268	1xM20	100	125	80	216	10	19	40	21,5	6	6204-ZZ	6204-ZZ	20*30*7	20*30*7	200	130	165	-	12
	0,75	4	Q2H80M4C	Aluminium	158	268	1xM20	100	125	80	216	10	1 9	40	21,5	6	6204-ZZ	6204-ZZ	20*30*7	20*30*7	200	130	165	-	12
	0,75	6	Q2H90S6B	Aluminium	172	344	1xM25	100-125	140	90	223	10	24	50	27	8	6305-ZZ	6205-ZZ	25*40*7	25*40*7	200	130	165	-	12
	1,1	2	Q2H80M2C	Aluminium	158	268	1xM20	100	125	80	216	10	19	40	21,5	6	6204-ZZ	6204-ZZ	20*30*7	20*30*7	200	130	165	-	12
C	1,1	4	Q2H80M4D	Aluminium	158	268	1xM20	100	125	80	216	10	19	40	21,5	6	6204-ZZ	6204-ZZ	20*30*7	20*30*7	200	130	165	-	12
	1,1	4	Q2HS90S4B	Aluminium	158	278	1xM25	100-125	140	90	213	10	24	50	27	8	6305-ZZ	6204-ZZ	25*40*7	20*30*7	200	130	165	-	12
	1,1	6	Q2H90L6C	Aluminium	172	344	1xM25	100-125	140	90	223	10	24	50	27	8	6305-ZZ	6205-ZZ	25*40*7	25*40*7	200	130	165	-	12
C	1,5	2	Q2H80M2D	Aluminium	158	268	1xM20	100	125	80	216	10	19	40	21,5	6	6204-ZZ	6204-ZZ	20*30*7	20*30*7	200	130	165	-	12
	1,5	2	Q2HS90S2B	Aluminium	158	278	1xM25	100-125	140	90	213	10	24	50	27	8	6305-ZZ	6204-ZZ	25*40*7	20*30*7	200	130	165	-	12
C	1,5	4	Q2H80M4DE	Aluminium	158	268	1xM20	100	125	80	216	10	19	40	21,5	6	6204-ZZ	6204-ZZ	20*30*7	20*30*7	200	130	165	-	12
	1,5	4	Q2HS90L4C	Aluminium	158	303	1xM25	100-125	140	90	213	10	24	50	27	8	6305-ZZ	6204-ZZ	25*40*7	20*30*7	200	130	165	-	12
	1,5	6	Q2H100L6C	Aluminium	191	400	1xM25	140	160	100	243	12	28	60	31	8	6306-ZZ	6205-ZZ	30*47*7	30*47*7	250	180	215	-	14,5
C	2,2	2	Q2H80M2DE	Aluminium	158	268	1xM20	100	125	80	216	10	19	40	21,5	6	6204-ZZ	6204-ZZ	20*30*7	20*30*7	200	130	165	-	12
	2,2	2	Q2HS90L2C	Aluminium	158	303	1xM25	100-125	140	90	213	10	24	50	27	8	6305-ZZ	6204-ZZ	25*40*7	20*30*7	200	130	165	-	12
C	2,2	4	Q2H90L4D	Aluminium	172	344	1xM25	100-125	140	90	223	10	24	50	27	8	6305-ZZ	6205-ZZ	25*40*7	25*40*7	200	130	165	-	12
	2,2	4	Q2HS100L4B	Aluminium	172	349	1xM25	140	160	100	233	12	28	60	31	8	6306-ZZ	6205-ZZ	30*47*7	25*40*7	250	180	215	-	14,5
	2,2	6	Q2H112M6C	Aluminium	210	396	1xM25	140	190	112	265	12	28	60	31	8	6306-ZZ	6206-ZZ	30*47*7	30*47*7	250	180	215	-	14,5
C	3	2	Q2H90L2D	Aluminium	172	344	1xM25	100-125	140	90	223	10	24	50	27	8	6305-ZZ	6205-ZZ	25*40*7	25*40*7	200	130	165	-	12
	3	2	Q2HS100L2B	Aluminium	172	349	1xM25	140	160	100	233	12	28	60	31	8	6306-ZZ	6205-ZZ	30*47*7	25*40*7	250	180	215	-	14,5
C	3	4	Q2H90L4DE	Aluminium	172	379	1xM25	100-125	140	90	223	10	24	50	27	8	6305-ZZ	6205-ZZ	25*40*7	25*40*7	200	130	165	-	12
	3	4	Q2HS100L4C	Aluminium	172	384	1xM25	140	160	100	233	12	28	60	31	8	6306-ZZ	6205-ZZ	30*47*7	25*40*7	250	180	215	-	14,5
	3	6	Q2H132M6A	Aluminium	260	481	1xM32	140-178	216	132	312	12	38	80	41	10	6208-ZZ	6208-ZZ	40*62*10	40*62*10	300	230	265	-	14,5
SC	4	2	Q2H90L2DE	Aluminium	172	379	1xM25	100-125	140	90	223	10	24	50	27	8	6305-ZZ	6205-ZZ	25*40*7	25*40*7	200	130	165	-	12
C	4	2	Q2HS100L2C	Aluminium	172	384	1xM25	140	160	100	233	12	28	60	31	8	6306-ZZ	6205-ZZ	30*47*7	25*40*7	250	180	215	-	14,5
	4	2	Q2HS112M2B	Aluminium	191	399	1xM25	140	190	112	254	12	28	60	31	8	6306-ZZ	6205-ZZ	30*47*7	25*40*7	250	180	215	-	14,5
C	4	4	Q2H100L4D	Aluminium	191	400	1xM25	140	160	100	243	12	28	60	31	8	6306-ZZ	6205-ZZ	30*47*7	30*47*7	250	180	215	-	14,5
	4	4	Q2HS112M4C	Aluminium	191	399	1xM25	140	190	112	254	12	28	60	31	8	6306-ZZ	6205-ZZ	30*47*7	25*40*7	250	180	215	-	14,5

(1) Tolerance DIN EN 50347 "j6" up to 28mm, "k6" above 28mm
(2) According to DIN 6885
(3) Tolerance DIN EN 50347 "j6"

IE2 THREE PHASE ALUMINIUM MOTORS

					Main Dimensions			Foot Mounted Motors					Shaft				Bearing		Seal		Flange (FA) (BS)				
SIZE	Power (kW)	Number of Poles	Motor Type	Housing Type	AC	L	O	B	A	H	HD	K	D[1]	E	GA	F[2]	Drive Side	Non drive Side	Drive Side	Non drive Side	P	N[3]	M	R	S
	4	6	Q2H132M6B	Aluminium	260	481	1xM32	140-178	216	132	312	12	38	80	41	10	6208-ZZ	6208-ZZ	40*62*10	40*62*10	300	230	265	-	14,5
SC	5,5	2	Q2H100L2DE	Aluminium	191	400	1xM25	140	160	100	243	12	28	60	31	8	6306-ZZ	6205-ZZ	30*47*7	30*47*7	250	180	215	-	14,5
C	5,5	2	Q2HS112M2C	Aluminium	191	399	1xM25	140	190	112	254	12	28	60	31	8	6306-ZZ	6205-ZZ	30*47*7	25*40*7	250	180	215	-	14,5
	5,5	2	Q2HS132S2B	Aluminium	210	422	1xM25	140-178	216	132	283	12	38	80	41	10	6208-ZZ	6206-ZZ	40*62*10	30*47*7	300	230	265	-	14,5
C	5,5	4	Q2H112M4D	Aluminium	210	421	1xM25	140	190	112	265	12	28	60	31	8	6306-ZZ	6206-ZZ	30*47*7	30*47*7	250	180	215	-	14,5
	5,5	4	Q2HS132S4A	Aluminium	210	422	1xM25	140-178	216	132	283	12	38	80	41	10	6208-2Z	6206-2Z	40*62*10	30*47*7	300	230	265	-	14,5
	5,5	6	Q2H132M6C	Aluminium	260	481	1xM32	140-178	216	132	312	12	38	80	41	10	6208-ZZ	6208-ZZ	40*62*10	40*62*10	300	230	265	-	14,5
SC	7,5	2	Q2H100L2E	Aluminium	191	422	1xM25	140	160	100	243	12	28	60	31	8	6306-ZZ	6205-ZZ	30*47*7	30*47*7	250	180	215	-	14,5
C	7,5	2	Q2HS112M2D	Aluminium	191	421	1xM25	140	190	112	254	12	28	60	31	8	6306-ZZ	6205-ZZ	30*47*7	25*40*7	250	180	215	-	14,5
	7,5	2	Q2HS132S2C	Aluminium	210	422	1xM25	140-178	216	132	283	12	38	80	41	10	6208-ZZ	6206-ZZ	40*62*10	30*47*7	300	230	265	-	14,5
	7,5	4	Q2H132M4C	Aluminium	260	481	1xM32	140-178	216	132	312	12	38	80	41	10	6208-ZZ	6208-ZZ	40*62*10	40*62*10	300	230	265	-	14,5
	7,5	6	Q2H160M6B	Aluminium	305	591	1xM32	210-254	254	160	368	14,5	42	110	45	12	6309-ZZ	6209-ZZ	45*72*10	45*72*10	350	250	300	-	18,5
C	11	2	Q2H132M2A	Aluminium	260	481	1xM32	140-178	216	132	312	12	38	80	41	10	6208-ZZ	6208-ZZ	40*62*10	40*62*10	300	230	265	-	14,5
	11	2	Q2HS160M2C	Aluminium	260	520	1xM32	210-254	254	160	351	14,5	42	110	45	12	6309-ZZ	6208-ZZ	45*72*10	40*62*10	350	250	300	-	18,5
C	11	4	Q2H132M4D	Aluminium	260	481	1xM32	140-178	216	132	312	12	38	80	41	10	6208-ZZ	6208-ZZ	40*62*10	40*62*10	300	230	265	-	14,5
	11	4	Q2HS160M4B	Aluminium	260	520	1xM32	210-254	254	160	351	14,5	42	110	45	12	6309-ZZ	6208-ZZ	45*72*10	40*62*10	350	250	300	-	18,5
	11	6	Q2H160L6C	Aluminium	305	591	1xM32	210-254	254	160	368	14,5	42	110	45	12	6309-ZZ	6209-ZZ	45*72*10	45*72*10	350	250	300	-	18,5
C	15	2	Q2H132M2B	Aluminium	260	481	1xM32	140-178	216	132	312	12	38	80	41	10	6208-ZZ	6208-ZZ	40*62*10	40*62*10	300	230	265	-	14,5
	15	2	Q2HS160M2D	Aluminium	260	520	1xM32	210-254	254	160	351	14,5	42	110	45	12	6309-ZZ	6208-ZZ	45*72*10	40*62*10	350	250	300	-	18,5
C	15	4	Q2H132M4E	Aluminium	260	539	1xM32	140-178	216	132	312	12	38	80	41	10	6208-ZZ	6208-ZZ	40*62*10	40*62*10	300	230	265	-	14,5
	15	4	Q2HS160L4A	Aluminium	260	520	1xM32	210-254	254	160	351	14,5	42	110	45	12	6309-ZZ	6208-ZZ	45*72*10	40*62*10	350	250	300	-	18,5
	15	6	Q2H180L6A	Aluminium	349	696	1xM40	241-279	279	180	437	14,5	48	110	51,5	14	6310-ZZ	6310-ZZ	50*80*10	50*80*10	350	250	300	-	18,5
C	18,5	2	Q2H132M2C	Aluminium	260	539	1xM32	140-178	216	132	312	12	38	80	41	10	6208-ZZ	6208-ZZ	40*62*10	40*62*10	300	230	265	-	14,5
	18,5	2	Q2HS160L2A	Aluminium	260	520	1xM32	210-254	254	160	351	14,5	42	110	45	12	6309-ZZ	6208-ZZ	45*72*10	40*62*10	350	250	300	-	18,5
C	18,5	4	Q2H160L4B	Aluminium	305	591	1xM32	210-254	254	160	368	14,5	42	110	45	12	6309-ZZ	6209-ZZ	45*72*10	45*72*10	350	250	300	-	18,5
	18,5	4	Q2HS180M4A	Aluminium	305	596	1xM32	241-279	279	180	398	14,5	48	110	51,5	14	6310-ZZ	6209-ZZ	50*80*10	45*72*10	350	250	300	-	18,5
	18,5	6	Q2H200L6B	Aluminium	349	706	1xM50	305	318	200	455	18,5	55	110	59	16	6312-ZZ	6310-ZZ	60*90*10	60*90*10	400	300	350	-	18,5
C	22	2	Q2H160L2C	Aluminium	305	591	1xM32	210-254	254	160	368	14,5	42	110	45	12	6309-ZZ	6209-ZZ	45*72*10	45*72*10	350	250	300	-	18,5
	22	2	Q2HS180M2A	Aluminium	305	596	1xM32	241-279	279	180	398	14,5	48	110	51,5	14	6310-ZZ	6209-ZZ	50*80*10	45*72*10	350	250	300	-	18,5
C	22	4	Q2H160L4C	Aluminium	305	591	1xM32	210-254	254	160	368	14,5	42	110	45	12	6309-ZZ	6209-ZZ	45*72*10	45*72*10	350	250	300	-	18,5
	22	4	Q2HS180L4B	Aluminium	305	596	1xM32	241-279	279	180	398	14,5	48	110	51,5	14	6310-ZZ	6209-ZZ	50*80*10	45*72*10	350	250	300	-	18,5
	22	6	Q2H200L6C	Aluminium	349	706	1xM50	267-305	318	200	455	18,5	55	110	59	16	6312-ZZ	6310-ZZ	60*90*10	60*90*10	400	300	350	-	18,5
SC	30	2	Q2H160L2DE	Aluminium	305	591	1xM32	210-254	254	160	368	14,5	42	110	45	12	6309-ZZ	6209-ZZ	45*72*10	45*72*10	350	250	300	-	18,5
C	30	2	Q2H180M2B	Aluminium	349	696	1xM40	241-279	279	180	437	14,5	48	110	51,5	14	6310-ZZ	6310-ZZ	50*80*10	50*80*10	350	250	300	-	18,5
	30	2	Q2H200L2B	Aluminium	349	706	1xM50	267-305	318	200	455	18,5	55	110	59	16	6312-ZZ	6310-ZZ	60*90*10	60*90*10	400	300	350	-	18,5
C	30	4	Q2H180L4C	Aluminium	349	696	1xM40	241-279	279	180	437	14,5	48	110	51,5	14	6310-ZZ	6310-ZZ	50*80*10	50*80*10	350	250	300	-	18,5
	30	4	Q2H200L4C	Aluminium	349	706	1xM50	267-305	318	200	455	18,5	55	110	59	16	6312-ZZ	6310-ZZ	60*90*10	60*90*10	400	300	350	-	18,5
	30	6	Q2E225M6B	Aluminium	456	765	1xM50	286-311	356	225	485	18,5	60	140	64	18	6313-ZZ	6313-ZZ	65*100*13	65*100*13	450	350	400	-	18,5
C	37	2	Q2H180M2C	Aluminium	349	696	1xM40	241-279	279	180	437	14,5	48	110	51,5	14	6310-ZZ	6310-ZZ	50*80*10	50*80*10	350	250	300	-	18,5
	37	2	Q2H200L2C	Aluminium	349	706	1xM50	267-305	318	200	455	18,5	55	110	59	16	6312-ZZ	6310-ZZ	60*90*10	60*90*10	400	300	350	-	18,5
SC	37	4	Q2H180L4A	Aluminium	349	696	1xM40	241-279	279	180	398	14,5	48	110	51,5	14	6310-ZZ	6310-ZZ	50*80*10	50*80*10	350	250	300	-	18,5
C	37	4	Q2H200L4D	Aluminium	349	759	1xM50	267-305	318	200	455	18,5	55	110	59	16	6312-ZZ	6310-ZZ	60*90*10	60*90*10	400	300	350	-	18,5
	37	4	Q2E225M4A	Aluminium	456	765	1xM50	286-311	356	225	485	18,5	60	140	64	18	6313-ZZ	6313-ZZ	65*100*13	65*100*13	450	350	400	-	18,5
SC	45	2	Q2H180L2D	Aluminium	349	696	1xM40	241-279	279	180	437	14,5	48	110	51,5	14	6310-ZZ	6310-ZZ	50*80*10	50*80*10	350	250	300	-	18,5
C	45	2	Q2H200L2D	Aluminium	349	759	1xM50	267-305	318	200	455	18,5	55	110	59	16	6312-ZZ	6310-ZZ	60*90*10	60*90*10	400	300	350	-	18,5
	45	2	Q2E225M2A	Aluminium	456	735	1xM50	286-311	356	225	485	18,5	55	110	59	16	6313-ZZ	6313-ZZ	65*100*13	65*100*13	450	350	400	-	18,5
	45	4	Q2E225M4B	Aluminium	456	765	1xM50	286-311	356	225	485	18,5	60	140	64	18	6313-ZZ	6313-ZZ	65*100*13	65*100*13	450	350	400	-	18,5
SC	55	2	Q2H200L2E	Aluminium	349	759	1xM50	267-305	318	200	455	22,5	55	110	59	16	6312-ZZ	6310-ZZ	60*90*10	50*80*10	400	300	350	-	18,5
C	55	2	Q2E225M2C	Aluminium	456	735	1xM50	286-311	356	225	485	18,5	55	110	59	16	6313-ZZ	6313-ZZ	65*100*13	65*100*13	450	350	400	-	18,5
	55	2	Q2E250M2A	Aluminium	527	886	2*M50	349	406	250	615	24	60	140	18	64	6315-2Z	6313-2Z	75*112*12	65*100*13	550	450	500	-	18,5

DIMENSION - B14a, B34a

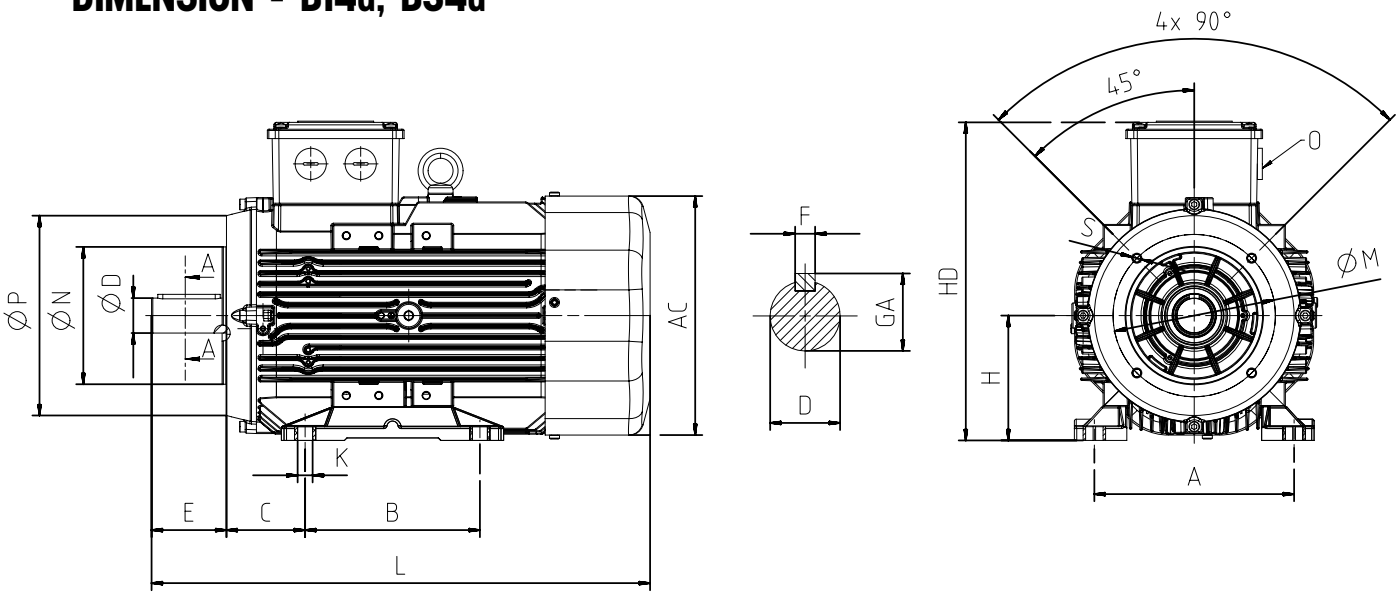

					Main Dimensions			Foot Mounted Motors					Shaft				Bearing		Seal		Flange (FC) (B14a)				
SIZE	Power [kW]	Number of Poles	Motor Type	Housing Type	AC	L	O	B	A	H	HD	K	D[1]	E	GA	F[2]	Drive Side	Non drive Side	Drive Side	Non drive Side	P	N[3]	M	R	S
	0,12	4	Q2E63M4A	Aluminium	123	220	1xM20	80	100	63	162	7	11	23	12,5	4	6201-ZZ	6201-ZZ	12*22*7	12*22*7	90	60	75	-	M5
	0,18	2	Q2E63M2A	Aluminium	123	220	1xM20	80	100	63	162	7	11	23	12,5	4	6201-ZZ	6201-ZZ	12*22*7	12*22*7	90	60	75	-	M5
	0,18	4	Q2E63M4B	Aluminium	123	220	1xM20	80	100	63	162	7	11	23	12,5	4	6201-ZZ	6201-ZZ	12*22*7	12*22*7	90	60	75	-	M5
	0,25	2	Q2E63M2B	Aluminium	123	220	1xM20	80	100	63	162	7	11	23	12,5	4	6201-2Z	6201-2Z	12*22*7	12*22*7	90	60	75	-	M5
	0,25	4	Q2E71M4C	Aluminium	138	253	1xM20	90	112	71	190	7	14	30	16	5	6202-ZZ	6202-ZZ	15*24*5	15*24*5	105	70	85	-	M6
	0,37	2	Q2E71M2C	Aluminium	138	253	1xM20	90	112	71	190	7	14	30	16	5	6202-ZZ	6202-ZZ	15*24*5	15*24*5	105	70	85	-	M6
	0,37	4	Q2E71M4D	Aluminium	138	253	1xM20	90	112	71	190	7	14	30	16	5	6202-ZZ	6202-ZZ	15*24*5	15*24*5	105	70	85	-	M6
	0,55	2	Q2E71M2D	Aluminium	138	253	1xM20	90	112	71	190	7	14	30	16	5	6202-ZZ	6202-ZZ	15*24*5	15*24*5	105	70	85	-	M6
	0,55	4	Q2H80M4B	Aluminium	158	268	1xM20	100	125	80	216	10	19	40	21,5	6	6204-ZZ	6204-ZZ	20*30*7	20*30*7	120	80	100	-	M6
	0,75	2	Q2H80M2B	Aluminium	158	268	1xM20	100	125	80	216	10	19	40	21,5	6	6204-ZZ	6204-ZZ	20*30*7	20*30*7	120	80	100	-	M6
	0,75	4	Q2H80M4C	Aluminium	158	268	1xM20	100	125	80	216	10	19	40	21,5	6	6204-ZZ	6204-ZZ	20*30*7	20*30*7	120	80	100	-	M6
	0,75	6	Q2H90S6B	Aluminium	172	344	1xM25	100-125	140	90	223	10	24	50	27	8	6305-ZZ	6205-ZZ	25*40*7	25*40*7	140	95	115	-	M8
	1,1	2	Q2H80M2C	Aluminium	158	268	1xM20	100	125	80	216	10	19	40	21,5	6	6204-ZZ	6204-ZZ	20*30*7	20*30*7	120	80	100	-	M6
C	1,1	4	Q2H80M4D	Aluminium	158	268	1xM20	100	125	80	216	10	19	40	21,5	6	6204-ZZ	6204-ZZ	20*30*7	20*30*7	120	80	100	-	M6
	1,1	4	Q2HS90S4B	Aluminium	158	278	1xM25	100-125	140	90	213	10	24	50	27	8	6305-ZZ	6204-ZZ	25*40*7	20*30*7	140	95	115	-	M8
	1,1	6	Q2H90L6C	Aluminium	172	344	1xM25	100-125	140	90	223	10	24	50	27	8	6305-ZZ	6205-ZZ	25*40*7	25*40*7	140	95	115	-	M8
C	1,5	2	Q2H80M2D	Aluminium	158	268	1xM20	100	125	80	216	10	19	40	21,5	6	6204-ZZ	6204-ZZ	20*30*7	20*30*7	120	80	100	-	M6
	1,5	2	Q2HS90S2B	Aluminium	158	278	1xM25	100-125	140	90	213	10	24	50	27	8	6305-ZZ	6204-ZZ	25*40*7	20*30*7	140	95	115	-	M8
C	1,5	4	Q2H80M4DE	Aluminium	158	268	1xM20	100	125	80	216	10	19	40	21,5	6	6204-ZZ	6204-ZZ	20*30*7	20*30*7	120	80	100	-	M6
	1,5	4	Q2HS90L4C	Aluminium	158	303	1xM25	100-125	140	90	213	10	24	50	27	8	6305-ZZ	6204-ZZ	25*40*7	20*30*7	140	95	115	-	M8
	1,5	6	Q2H100L6C	Aluminium	191	400	1xM25	140	160	100	243	12	28	60	31	8	6306-ZZ	6205-ZZ	30*47*7	30*47*7	160	110	130	-	M8
C	2,2	2	Q2H80M2DE	Aluminium	158	268	1xM20	100	125	80	216	10	19	40	21,5	6	6204-ZZ	6204-ZZ	20*30*7	20*30*7	120	80	100	-	M6
	2,2	2	Q2HS90L2C	Aluminium	158	303	1xM25	100-125	140	90	213	10	24	50	27	8	6305-ZZ	6204-ZZ	25*40*7	20*30*7	140	95	115	-	M8
C	2,2	4	Q2H90L4D	Aluminium	172	344	1xM25	100-125	140	90	223	10	24	50	27	8	6305-ZZ	6205-ZZ	25*40*7	25*40*7	140	95	115	-	M8
	2,2	4	Q2HS100L4B	Aluminium	172	349	1xM25	140	160	100	233	12	28	60	31	8	6306-ZZ	6205-ZZ	30*47*7	25*40*7	160	110	130	-	M8
	2,2	6	Q2H112M6C	Aluminium	210	396	1xM25	140	190	112	265	12	28	60	31	8	6306-ZZ	6206-ZZ	30*47*7	30*47*7	160	110	130	-	M8
C	3	2	Q2H90L2D	Aluminium	172	344	1xM25	100-125	140	90	223	10	24	50	27	8	6305-ZZ	6205-ZZ	25*40*7	25*40*7	140	95	115	-	M8
	3	2	Q2HS100L2B	Aluminium	172	349	1xM25	140	160	100	233	12	28	60	31	8	6306-ZZ	6205-ZZ	30*47*7	25*40*7	160	110	130	-	M8
C	3	4	Q2H90L4DE	Aluminium	172	379	1xM25	100-125	140	90	223	10	24	50	27	8	6305-ZZ	6205-ZZ	25*40*7	25*40*7	140	95	115	-	M8
	3	4	Q2HS100L4C	Aluminium	172	384	1xM25	140	160	100	233	12	28	60	31	8	6306-ZZ	6205-ZZ	30*47*7	25*40*7	160	110	130	-	M8
	3	6	Q2H132M6A	Aluminium	260	481	1xM32	140-178	216	132	312	12	38	80	41	10	6208-ZZ	6208-ZZ	40*62*10	40*62*10	200	130	165	-	M10

(1) Tolerance DIN EN 50347 “j6” up to 28mm, “k6” above 28mm
(2) According to DIN 6885
(3) Tolerance DIN EN 50347 “j6”

					Main Dimensions			Foot Mounted Motors					Shaft				Bearing		Seal		Flange (FC) (B14a)				
SIZE	Power (kW)	Number of Poles	Motor Type	Housing Type	AC	L	O	B	A	H	HD	K	D[1]	E	GA	F[2]	Drive Side	Non drive Side	Drive Side	Non drive Side	P	N[3]	M	R	S
SC	4	2	Q2H90L2DE	Aluminium	172	378.5	1xM25	100-125	140	90	223	10	24	50	27	8	6305-ZZ	6205-ZZ	25*40*7	25*40*7	140	95	115	-	M8
C	4	2	Q2HS100L2C	Aluminium	172	384	1xM25	140	160	100	233	12	28	60	31	8	6306-ZZ	6205-ZZ	30*47*7	25*40*7	160	110	130	-	M8
	4	2	Q2HS112M2B	Aluminium	191	399	1xM25	140	190	112	254	12	28	60	31	8	6306-ZZ	6205-ZZ	30*47*7	25*40*7	160	110	130	-	M8
C	4	4	Q2H100L4D	Aluminium	191	400	1xM25	140	160	100	243	12	28	60	31	8	6306-ZZ	6205-ZZ	30*47*7	30*47*7	160	110	130	-	M8
	4	4	Q2HS112M4C	Aluminium	191	399	1xM25	140	190	112	254	12	28	60	31	8	6306-ZZ	6205-ZZ	30*47*7	25*40*7	160	110	130	-	M8
	4	6	Q2H132M6B	Aluminium	260	481	1xM32	140-178	216	132	312	12	38	80	41	10	6208-ZZ	6208-ZZ	40*62*10	40*62*10	200	130	165	-	M10
SC	5.5	2	Q2H100L2DE	Aluminium	191	399.5	1xM25	140	160	100	243	12	28	60	31	8	6306-ZZ	6205-ZZ	30*47*7	30*47*7	160	110	130	-	M8
C	5.5	2	Q2HS112M2C	Aluminium	191	399	1xM25	140	190	112	254	12	28	60	31	8	6306-ZZ	6205-ZZ	30*47*7	25*40*7	160	110	130	-	M8
	5.5	2	Q2HS132S2B	Aluminium	210	422	1xM25	140-178	216	132	283	12	38	80	41	10	6208-ZZ	6206-ZZ	40*62*10	30*47*7	200	130	165	-	M10
C	5.5	4	Q2H112M4D	Aluminium	210	421	1xM25	140	190	112	265	12	28	60	31	8	6306-ZZ	6206-ZZ	30*47*7	30*47*7	160	110	130	-	M8
	5.5	4	Q2HS132S4A	Aluminium	210	422	1xM25	140-178	216	132	283	12	38	80	41	10	6208-2Z	6206-2Z	40*62*10	30*47*7	200	130	165	-	M10
	5.5	6	Q2H132M6C	Aluminium	260	481	1xM32	140-178	216	132	312	12	38	80	41	10	6208-ZZ	6208-ZZ	40*62*10	40*62*10	200	130	165	-	M10
SC	7.5	2	Q2H100L2E	Aluminium	191	422	1xM25	140	160	100	243	12	28	60	31	8	6306-ZZ	6205-ZZ	30*47*7	30*47*7	160	110	130	-	M8
C	7.5	2	Q2HS112M2D	Aluminium	191	421	1xM25	140	190	112	254	12	28	60	31	8	6306-ZZ	6205-ZZ	30*47*7	25*40*7	160	110	130	-	M8
	7.5	2	Q2HS132S2C	Aluminium	210	422	1xM25	140-178	216	132	283	12	38	80	41	10	6208-ZZ	6206-ZZ	40*62*10	30*47*7	200	130	165	-	M10
	7.5	4	Q2H132M4C	Aluminium	260	481	1xM32	140-178	216	132	312	12	38	80	41	10	6208-ZZ	6208-ZZ	40*62*10	40*62*10	200	130	165	-	M10
C	11	2	Q2H132M2A	Aluminium	260	481	1xM32	140-178	216	132	312	12	38	80	41	10	6208-ZZ	6208-ZZ	40*62*10	40*62*10	200	130	165	-	M10
C	11	4	Q2H132M4D	Aluminium	260	539	1xM32	140-178	216	132	312	12	38	80	41	10	6208-ZZ	6208-ZZ	40*62*10	40*62*10	200	130	165	-	M10
C	15	2	Q2H132M2B	Aluminium	260	539	1xM32	140-178	216	132	312	12	38	80	41	10	6208-ZZ	6208-ZZ	40*62*10	40*62*10	200	130	165	-	M10
C	15	4	Q2H132M4E	Aluminium	260	539	1xM32	140-178	216	132	312	12	38	80	41	10	6208-ZZ	6208-ZZ	40*62*10	40*62*10	200	130	165	-	M10
C	18.5	2	Q2H132M2C	Aluminium	260	539	1xM32	140-178	216	132	312	12	38	80	41	10	6208-ZZ	6208-ZZ	40*62*10	40*62*10	200	130	165	-	M10

DIMENSION - B14b, B34b

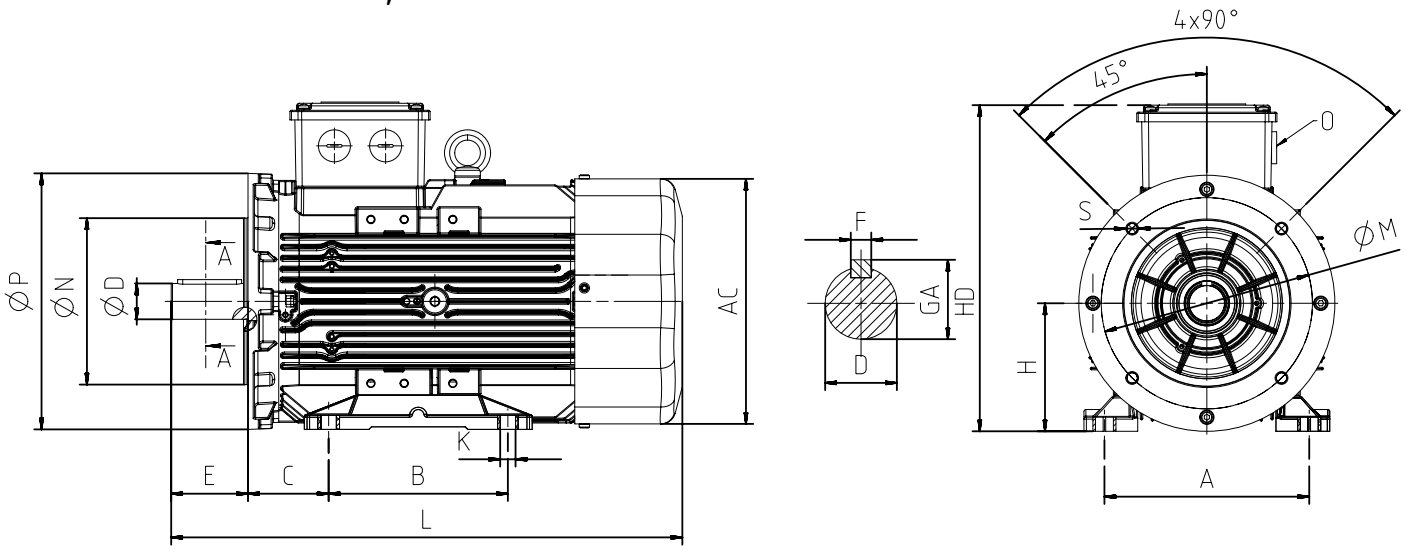

					Main Dimensions			Foot Mounted Motors					Shaft				Bearing		Seal		Flange (FC) (B14a)				
SIZE	Power (kW)	Number of Poles	Motor Type	Housing Type	AC	L	O	B	A	H	HD	K	D[1]	E	GA	F[2]	Drive Side	Non drive Side	Drive Side	Non drive Side	P	N[3]	M	R	S
	0,12	4	Q2E63M4A	Aluminium	123	220	1xM20	80	100	63	162	7	11	23	12,5	4	6201-ZZ	6201-ZZ	12*22*7	12*22*7	120	80	100	-	M6
	0,18	2	Q2E63M2A	Aluminium	123	220	1xM20	80	100	63	162	7	11	23	12,5	4	6201-ZZ	6201-ZZ	12*22*7	12*22*7	120	80	100	-	M6
	0,18	4	Q2E63M4B	Aluminium	123	220	1xM20	80	100	63	162	7	11	23	12,5	4	6201-ZZ	6201-ZZ	12*22*7	12*22*7	120	80	100	-	M6
	0,25	2	Q2E63M2B	Aluminium	123	220	1xM20	80	100	63	162	7	11	23	12,5	4	6201-2Z	6201-2Z	12*22*7	12*22*7	120	80	100	-	M6
	0,25	4	Q2E71M4C	Aluminium	138	253	1xM20	90	112	71	190	7	14	30	16	5	6202-ZZ	6202-ZZ	15*24*5	15*24*5	140	95	115	-	M8
	0,37	2	Q2E71M2C	Aluminium	138	253	1xM20	90	112	71	190	7	14	30	16	5	6202-ZZ	6202-ZZ	15*24*5	15*24*5	140	95	115	-	M8
	0,37	4	Q2E71M4D	Aluminium	138	253	1xM20	90	112	71	190	7	14	30	16	5	6202-ZZ	6202-ZZ	15*24*5	15*24*5	140	95	115	-	M8
	0,55	2	Q2E71M2D	Aluminium	138	253	1xM20	90	112	71	190	7	14	30	16	5	6202-ZZ	6202-ZZ	15*24*5	15*24*5	140	95	115	-	M8
	0,55	4	Q2H80M4B	Aluminium	158	268	1xM20	100	125	80	216	10	19	40	21,5	6	6204-ZZ	6204-ZZ	20*30*7	20*30*7	160	110	130	-	M8
	0,75	2	Q2H80M2B	Aluminium	158	268	1xM20	100	125	80	216	10	19	40	21,5	6	6204-ZZ	6204-ZZ	20*30*7	20*30*7	160	110	130	-	M8
	0,75	4	Q2H80M4C	Aluminium	158	268	1xM20	100	125	80	216	10	19	40	21,5	6	6204-ZZ	6204-ZZ	20*30*7	20*30*7	160	110	130	-	M8
	0,75	6	Q2H90S6B	Aluminium	172	344	1xM25	100-125	140	90	223	10	24	50	27	8	6305-ZZ	6205-ZZ	25*40*7	25*40*7	160	110	130	-	M8
	1,1	2	Q2H80M2C	Aluminium	158	268	1xM20	100	125	80	216	10	19	40	21,5	6	6204-ZZ	6204-ZZ	20*30*7	20*30*7	160	110	130	-	M8
C	1,1	4	Q2H80M4D	Aluminium	158	268	1xM20	100	125	80	216	10	19	40	21,5	6	6204-ZZ	6204-ZZ	20*30*7	20*30*7	160	110	130	-	M8
	1,1	4	Q2HS90S4B	Aluminium	158	278	1xM25	100-125	140	90	213	10	24	50	27	8	6305-ZZ	6204-ZZ	25*40*7	20*30*7	160	110	130	-	M8
	1,1	6	Q2H90L6C	Aluminium	172	344	1xM25	100-125	140	90	223	10	24	50	27	8	6305-ZZ	6205-ZZ	25*40*7	25*40*7	160	110	130	-	M8
C	1,5	2	Q2H80M2D	Aluminium	158	268	1xM20	100	125	80	216	10	19	40	21,5	6	6204-ZZ	6204-ZZ	20*30*7	20*30*7	160	110	130	-	M8
	1,5	2	Q2HS90S2B	Aluminium	158	278	1xM25	100-125	140	90	213	10	24	50	27	8	6305-ZZ	6204-ZZ	25*40*7	20*30*7	160	110	130	-	M8
C	1,5	4	Q2H80M4DE	Aluminium	158	268	1xM20	100	125	80	216	10	19	40	21,5	6	6204-ZZ	6204-ZZ	20*30*7	20*30*7	160	110	130	-	M8
	1,5	4	Q2HS90L4C	Aluminium	158	303	1xM25	100-125	140	90	213	10	24	50	27	8	6305-ZZ	6204-ZZ	25*40*7	20*30*7	160	110	130	-	M8
	1,5	6	Q2H100L6C	Aluminium	191	400	1xM25	140	160	100	243	12	28	60	31	8	6306-ZZ	6205-ZZ	30*47*7	30*47*7	200	130	165	-	M10
C	2,2	2	Q2H80M2DE	Aluminium	158	268	1xM20	100	125	80	216	10	19	40	21,5	6	6204-ZZ	6204-ZZ	20*30*7	20*30*7	160	110	130	-	M8
	2,2	2	Q2HS90L2C	Aluminium	158	303	1xM25	100-125	140	90	213	10	24	50	27	8	6305-ZZ	6204-ZZ	25*40*7	20*30*7	160	110	130	-	M8
C	2,2	4	Q2H90L4D	Aluminium	172	344	1xM25	100-125	140	90	223	10	24	50	27	8	6305-ZZ	6205-ZZ	25*40*7	25*40*7	160	110	130	-	M8
	2,2	4	Q2HS100L4B	Aluminium	172	349	1xM25	140	160	100	233	12	28	60	31	8	6306-ZZ	6205-ZZ	30*47*7	25*40*7	200	130	165	-	M10
	2,2	6	Q2H112M6C	Aluminium	210	396	1xM25	140	190	112	265	12	28	60	31	8	6306-ZZ	6206-ZZ	30*47*7	30*47*7	200	130	165	-	M10
C	3	2	Q2H90L2D	Aluminium	172	344	1xM25	100-125	140	90	223	10	24	50	27	8	6305-ZZ	6205-ZZ	25*40*7	25*40*7	160	110	130	-	M8
	3	2	Q2HS100L2B	Aluminium	172	349	1xM25	140	160	100	233	12	28	60	31	8	6306-ZZ	6205-ZZ	30*47*7	25*40*7	200	130	165	-	M10
C	3	4	Q2H90L4DE	Aluminium	172	379	1xM25	100-125	140	90	223	10	24	50	27	8	6305-ZZ	6205-ZZ	25*40*7	25*40*7	160	110	130	-	M8
	3	4	Q2HS100L4C	Aluminium	172	384	1xM25	140	160	100	233	12	28	60	31	8	6306-ZZ	6205-ZZ	30*47*7	25*40*7	200	130	165	-	M10
	3	6	Q2H132M6A	Aluminium	260	481	1xM32	140-178	216	132	312	12	38	80	41	10	6208-ZZ	6208-ZZ	40*62*10	40*62*10	250	180	215	-	M12

(1) Tolerance DIN EN 50347 “j6” up to 28mm, “k6” above 28mm
(2) According to DIN 6885
(3) Tolerance DIN EN 50347 “j6”

					Main Dimensions			Foot Mounted Motors					Shaft				Bearing		Seal		Flange (FC) (B14a)				
SIZE	Power (kW)	Number of Poles	Motor Type	Housing Type	AC	L	O	B	A	H	HD	K	D[1]	E	GA	F[2]	Drive Side	Non drive Side	Drive Side	Non drive Side	P	N[3]	M	R	S
SC	4	2	Q2H90L2DE	Aluminium	172	379	1xM25	100-125	140	90	223	10	24	50	27	8	6305-ZZ	6205-ZZ	25*40*7	25*40*7	160	110	130	-	M8
C	4	2	Q2HS100L2C	Aluminium	172	384	1xM25	140	160	100	233	12	28	60	31	8	6306-ZZ	6205-ZZ	30*47*7	25*40*7	200	130	165	-	M10
	4	2	Q2HS112M2B	Aluminium	191	399	1xM25	140	190	112	254	12	28	60	31	8	6306-ZZ	6205-ZZ	30*47*7	25*40*7	200	130	165	-	M10
C	4	4	Q2H100L4D	Aluminium	191	400	1xM25	140	160	100	243	12	28	60	31	8	6306-ZZ	6205-ZZ	30*47*7	30*47*7	200	130	165	-	M10
	4	4	Q2HS112M4C	Aluminium	191	399	1xM25	140	190	112	254	12	28	60	31	8	6306-ZZ	6205-ZZ	30*47*7	25*40*7	200	130	165	-	M10
	4	6	Q2H132M6B	Aluminium	260	481	1xM32	140-178	216	132	312	12	38	80	41	10	6208-ZZ	6208-ZZ	40*62*10	40*62*10	250	180	215	-	M12
SC	5.5	2	Q2H100L2DE	Aluminium	192	400	1xM25	140	160	100	243	12	28	60	31	8	6306-ZZ	6205-ZZ	30*47*7	30*47*7	200	130	165	-	M10
C	5.5	2	Q2HS112M2C	Aluminium	191	399	1xM25	140	190	112	254	12	28	60	31	8	6306-ZZ	6205-ZZ	30*47*7	25*40*7	200	130	165	-	M10
	5.5	2	Q2HS132S2B	Aluminium	210	422	1xM25	140-178	216	132	283	12	38	80	41	10	6208-ZZ	6206-ZZ	40*62*10	30*47*7	250	180	215	-	M12
C	5.5	4	Q2H112M4D	Aluminium	210	421	1xM25	140	190	112	265	12	28	60	31	8	6306-ZZ	6206-ZZ	30*47*7	30*47*7	200	130	165	-	M10
	5.5	4	Q2HS132S4A	Aluminium	210	422	1xM25	140-178	216	132	283	12	38	80	41	10	6208-2Z	6206-2Z	40*62*10	30*47*7	250	180	215	-	M12
	5.5	6	Q2H132M6C	Aluminium	260	481	1xM32	140-178	216	132	312	12	38	80	41	10	6208-ZZ	6208-ZZ	40*62*10	40*62*10	250	180	215	-	M12
SC	7.5	2	Q2H100L2E	Aluminium	192	422	1xM25	140	160	100	243	12	28	60	31	8	6306-ZZ	6205-ZZ	30*47*7	30*47*7	200	130	165	-	M10
C	7.5	2	Q2HS112M2D	Aluminium	191	421	1xM25	140	190	112	254	12	28	60	31	8	6306-ZZ	6205-ZZ	30*47*7	25*40*7	200	130	165	-	M10
	7.5	2	Q2HS132S2C	Aluminium	210	422	1xM25	140-178	216	132	283	12	38	80	41	10	6208-ZZ	6206-ZZ	40*62*10	30*47*7	250	180	215	-	M12
	7.5	4	Q2H132M4C	Aluminium	260	481	1xM32	140-178	216	132	312	12	38	80	41	10	6208-ZZ	6208-ZZ	40*62*10	40*62*10	250	180	215	-	M12
C	11	2	Q2H132M2A	Aluminium	260	481	1xM32	140-178	216	132	312	12	38	80	41	10	6208-ZZ	6208-ZZ	40*62*10	40*62*10	250	180	215	-	M12
C	11	4	Q2H132M4D	Aluminium	260	539	1xM32	140-178	216	132	312	12	38	80	41	10	6208-ZZ	6208-ZZ	40*62*10	40*62*10	250	180	215	-	M12
C	15	2	Q2H132M2B	Aluminium	260	539	1xM32	140-178	216	132	312	12	38	80	41	10	6208-ZZ	6208-ZZ	40*62*10	40*62*10	250	180	215	-	M12
C	15	4	Q2H132M4E	Aluminium	260	539	1xM32	140-178	216	132	312	12	38	80	41	10	6208-ZZ	6208-ZZ	40*62*10	40*62*10	250	180	215	-	M12
C	18.5	2	Q2H132M2C	Aluminium	260	539	1xM32	140-178	216	132	312	12	38	80	41	10	6208-ZZ	6208-ZZ	40*62*10	40*62*10	250	180	215	-	M12

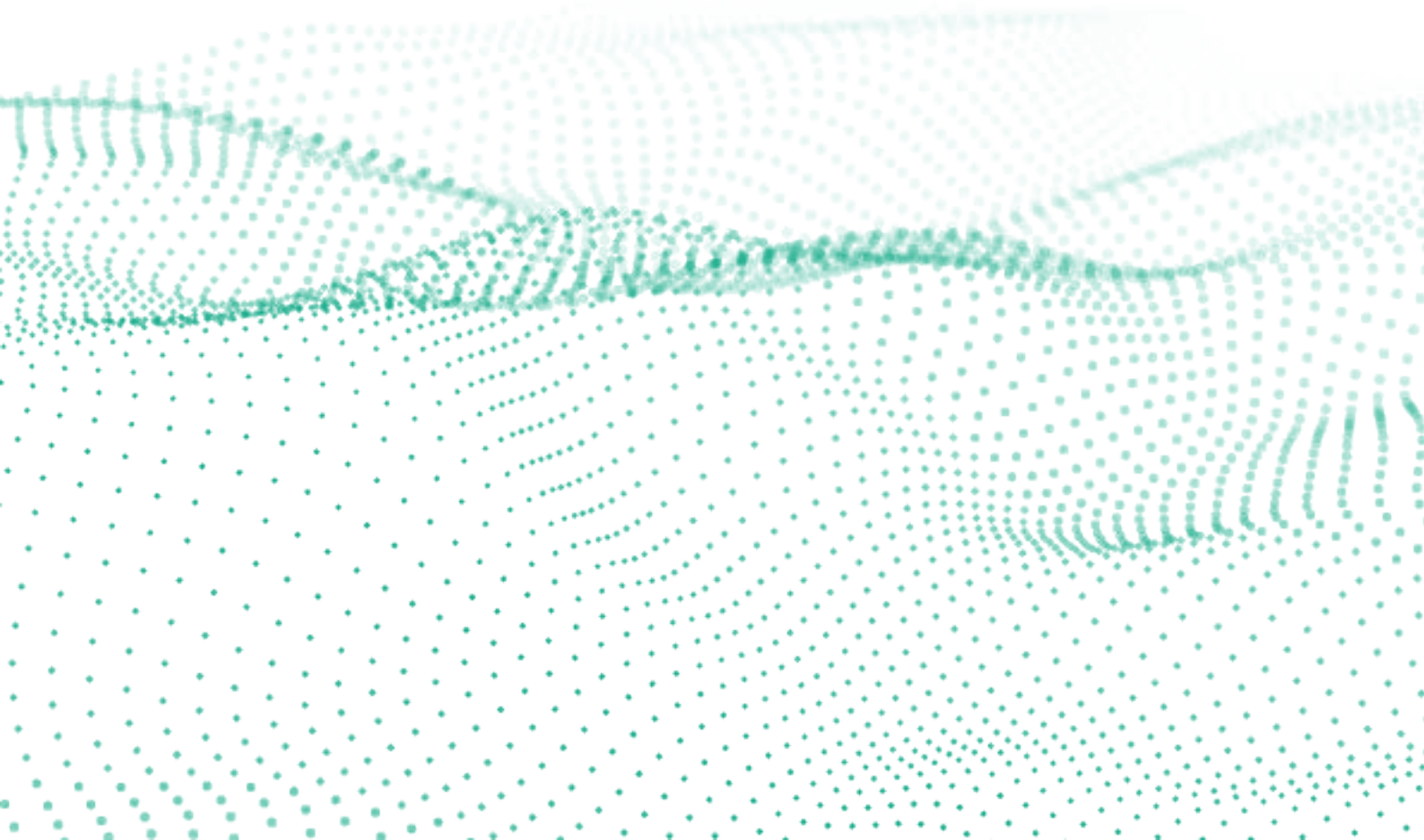

THREE PHASE CAST IRON MOTORS

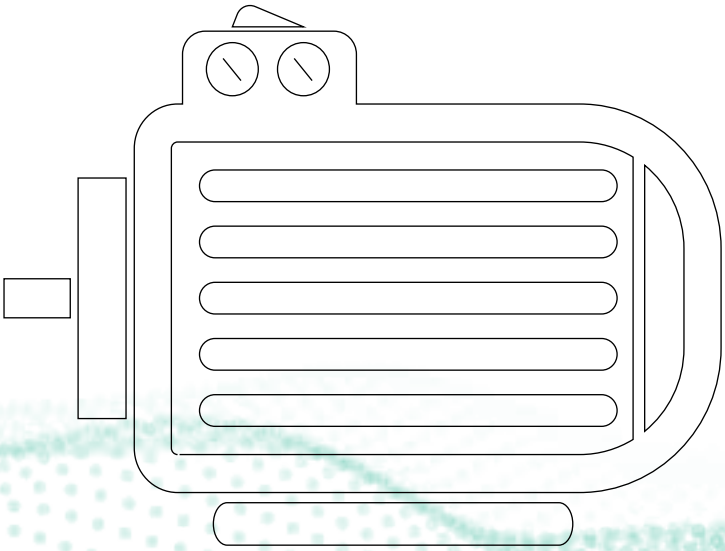

ELECTRICAL CHARACTERISTICS AT 50 Hz

	MOTOR TYPE	HOUSING TYPE	RATED VALUES					STARTING VALUES				Break-down Torque Ratio	EFFICIENCY *			Cosφ	J	Weight (B3)	Sound Pressure Level dBA **
			POWER		SPEED	CURRENT	TORQUE	CURRENT		TORQUE			η %						
								I_A / I_N		M_A / M_N									
			kW	HP	rpm	A	Nm	λ	Δ	λ	Δ	Mk/ Mn	4/4	3/4	2/4	4/4	kgm²	kg	
	2 pole 3000 rpm																		
230/400V	Q3HG80M2C	Cast Iron	0,75	1	2890	1,6	2,5	8,2	-	3,3	-	4,0	80,7	79,5	75,8	0,82	0,00140	19	57
230/400V	Q3HG80M2D	Cast Iron	1,10	1,5	2900	2,4	3,6	7,4	-	3,5	-	4,3	82,7	80,2	76,4	0,81	0,00170	22	57
230/400V	Q3HG90L2C	Cast Iron	1,50	2	2930	3,1	4,9	9,5	-	3,0	-	4,9	84,2	86,2	84,2	0,84	0,00249	26	62
230/400V	Q3HG90L2D	Cast Iron	2,20	3	2917	4,3	7,2	9,2	-	3,1	-	4,9	85,9	86,4	85,2	0,87	0,00283	30	62
230/400V	Q3HG100L2D	Cast Iron	3,00	4	2925	5,5	9,8	11,8	-	3,8	-	4,6	87,1	87,1	85,4	0,90	0,00536	39	63
400/690V	Q3HG112M2C	Cast Iron	4,00	5,5	2916	7,4	13,2	-	10,7	-	3,44	4,3	88,10	88,40	87,10	0,90	0,00604	52	67
400/690V	Q3HSG112M2C	Cast Iron	4,00	5,5	2950	7,7	12,7	-	13,6	-	4,9	5,8	88,10	87,00	84,40	0,86	0,00638	45	68
400/690V	Q3HSG132S2C	Cast Iron	5,50	7,5	2918	10	18,0	-	11,6	-	4,2	5,4	89,20	88,30	86,70	0,90	0,00772	56	69
400/690V	Q3HSG132S2D	Cast Iron	7,50	10	2903	13,5	24,7	-	11,0	-	4,2	5,2	90,10	89,80	88,90	0,90	0,00932	63	69
400/690V	Q3HG160M2C	Cast Iron	11,00	15	2965	20,1	35,4	-	11,4	-	3,4	5,1	91,20	91,80	90,40	0,86	0,03957	84	70
400/690V	Q3HSG160M2D	Cast Iron	11,00	15	2940	20,8	35,8	-	11,8	-	4,8	6,5	91,20	90,70	89,30	0,82	0,03517	99	70
400/690V	Q3HG160M2D	Cast Iron	15,00	20	2960	26,4	48,4	-	11,1	-	3,3	4,9	91,90	91,50	89,80	0,89	0,04322	108	70
400/690V	Q3HSG160M2DE	Cast Iron	15,00	20	2941	27,5	48,8	-	12,0	-	4,3	5,9	91,90	90,50	89,00	0,86	0,04015	115	71
400/690V	Q3HG160L2C	Cast Iron	18,50	25	2957	32,9	56,7	-	10,6	-	3,4	5,1	92,40	92,80	92,00	0,87	0,04809	132	70
400/690V	Q3HSG180M2B	Cast Iron	22,00	30	2959	39,5	71,0	-	11,8	-	3,7	5,4	92,70	91,90	90,70	0,87	0,05869	155	77
400/690V	Q3HG200L2C	Cast Iron	30,00	40	2964	51,2	97,6	-	10,4	-	2,7	4,1	93,30	92,80	91,60	0,91	0,10277	206	78
400/690V	Q3HG200L2D	Cast Iron	37,00	50	2960	61,6	118,7	-	9,9	-	2,75	4,2	93,70	93,70	93,10	0,92	0,11383	221	78
400/690V	Q3HG225M2B	Cast Iron	45,00	60	2976	77,7	144,4	-	11,4	-	3,2	6,7	94,00	94,40	93,50	0,89	0,23500	314	80
400/690V	Q3HG250M2B	Cast Iron	55,00	75	2968	93,6	177,1	-	8,5	-	2,8	5,0	94,30	93,90	93,30	0,90	0,48700	332	80
400/690V	Q3EP280M2C	Cast Iron	75,00	100	2975	124,9	240,7	-	8,4	-	2,2	4,4	94,70	94,20	93,10	0,92	0,54000	585	82
400/690V	Q3EP280M2D	Cast Iron	90,00	125	2975	150,7	288,9	-	8,6	-	2,4	5,4	95,00	94,70	93,70	0,93	0,64500	596	82
400/690V	Q3HG315S2D	Cast Iron	110,00	150	2989	202,2	351,6	-	11,5	-	2,0	5,4	95,20	93,90	92,30	0,83	2,19900	880	84
400/690V	Q3HG315M2B	Cast Iron	132,00	180	2984	226,2	423,2	-	9,7	-	2,0	4,3	95,40	95,10	94,10	0,87	2,37790	903	84
400/690V	Q3HG315L2A	Cast Iron	160,00	215	2990	302,1	511,6	-	11,2	-	2,6	6,1	95,60	94,50	92,70	0,81	2,62170	958	84
400/690V	Q3HG315L2C	Cast Iron	200,00	270	2983	343,0	640,3	-	10,8	-	2,2	4,7	95,80	95,40	94,50	0,87	2,90860	1013	84
400/690V	Q3EP355M2C	Cast Iron	250,00	280	2983	419,0	800,0	-	7,3	-	1,7	2,5	95,80	95,80	94,70	0,90	3,81300	1612	91
400/690V	Q3EP355L2B	Cast Iron	315,00	353	2984	527,0	1008,0	-	7,3	-	1,8	2,5	95,80	95,70	94,40	0,90	4,52000	1771	91
400/690V	Q3EP355L2C	Cast Iron	355,00	398	2981	594,0	1137,0	-	7,9	-	2,2	2,5	95,80	95,80	95,00	0,90	5,58000	2002	91
	4 pole 1500 rpm																		
230/400V	Q3HG80M4C	Cast Iron	0,55	0,75	1453	1,4	3,6	6,6	-	1,6	-	2,0	80,8	79,3	75,2	0,73	0,00170	19	57
230/400V	Q3HG80M4D	Cast Iron	0,75	1	1447	1,8	5,0	6,6	-	2,6	-	3,5	82,5	80,4	77,1	0,74	0,00261	19	52
230/400V	Q3HG90L4C	Cast Iron	1,10	1,5	1445	2,5	7,3	7,7	-	3,4	-	4,0	84,1	83,2	80,6	0,78	0,00464	29	53
230/400V	Q3HG90L4D	Cast Iron	1,50	2	1449	3,5	9,9	8,1	-	3,6	-	4,2	85,3	85,0	82,1	0,76	0,00526	30	53
230/400V	Q3HG100L4C	Cast Iron	2,20	3	1453	4,5	14,4	9,6	-	3,6	-	4,4	86,7	86,3	84	0,8	0,00871	41	56
400/690V	Q3HG112M4D	Cast Iron	4,00	5,5	1459	8,5	26,1	-	9,7	-	4,0	4,7	88,6	87,9	85,7	0,77	0,01383	56	54
400/690V	Q3HG132S4B	Cast Iron	5,50	7,5	1470	10,9	35,6	-	8,6		2,2	3,7	89,6	89,0	87,3	0,81	0,03560	82	61
400/690V	Q3HG132M4D	Cast Iron	7,50	10	1467	14,8	48,8	-	9,1	-	2,3	4,0	90,4	89,8	88,6	0,82	0,04030	87	60
400/690V	Q3HG160M4C	Cast Iron	11,00	15	1475	22,0	71,3	-	7,3	-	2,7	3,1	91,4	91,6	90,7	0,79	0,07542	125	62
400/690V	Q3HSG160M4C	Cast Iron	11,00	15	1470	20,9	71,6	-	9,1	-	2,6	3,9	91,4	91,0	90,1	0,84	0,05940	112	63
400/690V	Q3HG160L4B	Cast Iron	15,00	20	1476	30,8	96,9	-	7,7	-	2,9	3,6	92,1	91,4	90,1	0,77	0,09005	137	62
400/690V	Q3HSG180M4B	Cast Iron	18,50	25	1474	36,8	119,8	-	7,2	-	2,7	3,2	92,6	92,3	91,7	0,79	0,11398	163	67
400/690V	Q3HG180L4B	Cast Iron	22,00	30	1484	42,4	141,4	-	9,3	-	2,8	3,8	93,0	92,6	91,5	0,81	0,18660	205	68
400/690V	Q3HG200L4D	Cast Iron	30,00	40	1475	54,8	195,4	-	8,0	-	2,5	3,1	93,6	94,2	93,9	0,85	0,22166	263	68
400/690V	Q3HG225S4B	Cast Iron	37,00	50	1483	68,5	237,9	-	8,4	-	2,85	3,9	93,9	92,9	91,7	0,84	0,36420	323	71
400/690V	Q3HG225M4C	Cast Iron	45,00	60	1481	82,3	290,1	-	7,8	-	2,6	4,2	94,2	93,8	93,1	0,84	0,43500	355	71
400/690V	Q3HG250M4B	Cast Iron	55,00	75	1477	103,7	357,1	-	7,5	-	2,8	4,0	94,6	94,0	93,4	0,82	0,90782	383	72
400/690V	Q3EP280M4C	Cast Iron	75,00	100	1485	138,9	482,3	-	7,8	-	3,0	3,2	95	94,8	94	0,82	1,06100	638	73
400/690V	Q3EP280M4D	Cast Iron	90,00	125	1485	163,5	578,7	-	7,9	-	3,0	3,2	95,2	95,0	93,9	0,86	1,14760	653	73
400/690V	Q3HG315S4D	Cast Iron	110,00	150	1491	195,3	703,3	-	11,1	-	2,86	4,1	95,4	94,5	93,2	0,85	3,46500	908	83
400/690V	Q3HG315M4B	Cast Iron	132,00	180	1489	223,7	846,6	-	9,1	-	2,3	3,2	95,6	95,6	95,1	0,89	3,96600	995	83
400/690V	Q3HG315L4A	Cast Iron	160,00	215	1489	270,6	1026,2	-	9,5	-	2,5	3,3	95,8	95,8	95,2	0,89	4,88320	1078	83
400/690V	Q3HG315L4B	Cast Iron	200,00	270	1489	345,0	1282,6	-	10,1	-	2,8	3,5	96,0	95,6	94,7	0,88	5,23440	1068	83
400/690V	Q3EP355M4C	Cast Iron	250,00	280	1491	422,0	1601,0	-	7,5	-	1,9	2,4	96,0	96,0	95,5	0,89	9,30600	1692	82
400/690V	Q3EP355L4B	Cast Iron	315,00	353	1491	532,0	2017,0	-	7,5	-	1,9	2,4	96,0	96,0	95,5	0,89	10,06700	1879	82
400/690V	Q3EP355L4C	Cast Iron	355,00	398	1491	600,0	2273,0	-	7,5	-	2,0	2,3	96,0	96,0	95,5	0,89	11,90000	1953	82

* According to IEC 60034-2-1

** The sound pressure measurements are taken 1m away from the motor

** Tolerance +3 dBA

DIMENSION - B3

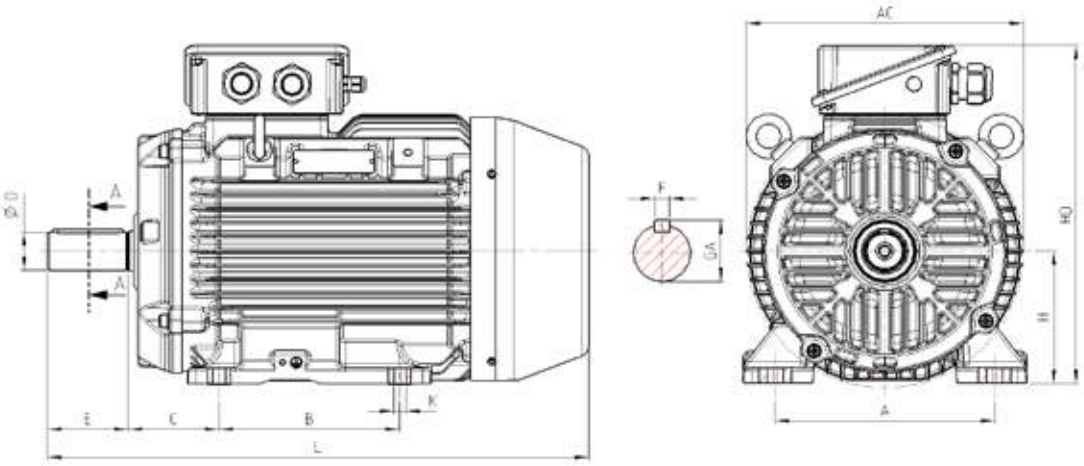

				Main Dimensions			Foot Mounted Motors						Shaft				Bearing		Seal	
Power [kW]	Number of Poles	Motor Type	Housing Type	AC	L	O	B	A	H	HD	K	C	D[1]	E	GA	F[2]	Drive Side	Non drive Side	Drive Side	Non drive Side
0.55	4	Q3HG80M4C	Cast Iron	175	282	2xM25	100	125	80	225	10	50	19	40	21.5	6	6204 ZZ	6204 ZZ	20*30*7	20*30*7
0.75	2	Q3HG80M2C	Cast Iron	175	282	2xM25	100	125	80	225	10	50	19	40	21.5	6	6204 ZZ	6204 ZZ	20*30*7	20*30*7
0.75	4	Q3HG80M4D	Cast Iron	175	282	2xM25	100	125	80	225	10	50	19	40	21.5	6	6204 ZZ	6204 ZZ	20*30*7	20*30*7
1.10	2	Q3HG80M2D	Cast Iron	175	317	2xM25	100	125	80	225	10	50	19	40	21.5	6	6204 ZZ	6204 ZZ	20*30*7	20*30*7
1.10	4	Q3HG90L4C	Cast Iron	185	369	2xM25	125	140	90	232	10	56	24	50	27	8	6305 ZZ	6205 ZZ	25*40*7	25*40*7
1.50	2	Q3HG90L2C	Cast Iron	185	339	2xM25	125	140	90	232	10	56	24	50	27	8	6305 ZZ	6205 ZZ	25*40*7	25*40*7
1.50	4	Q3HG90L4D	Cast Iron	185	369	2xM25	125	140	90	232	10	56	24	50	27	8	6305 ZZ	6205 ZZ	25*40*7	25*40*7
2.20	2	Q3HG90L2D	Cast Iron	185	369	2xM25	125	140	90	232	10	56	24	50	27	8	6305 ZZ	6205 ZZ	25*40*7	25*40*7
2.20	4	Q3HG100L4C	Cast Iron	203	416	2xM25	140	160	100	266	12	63	28	60	31	8	6306 ZZ	6306 ZZ	30*47*7	30*47*7
3.00	2	Q3HG100L2D	Cast Iron	203	416	2xM25	140	160	100	266	12	63	28	60	31	8	6306 ZZ	6306 ZZ	30*47*7	30*47*7
3.00	4	Q3HG100L4D	Cast Iron	203	445	2xM25	140	160	100	266	12	63	28	60	31	8	6306 ZZ	6306 ZZ	30*47*7	30*47*7
4.00	2	Q3HG112M2C	Cast Iron	222	434	2xM25	140	190	112	290	12	70	28	60	31	8	6306 ZZ	6306 ZZ	30*47*7	30*47*7
4.00	2	Q3HSG112M2C	Cast Iron	205	416	2xM25	140	190	112	283	12	70	28	60	31	8	6306 ZZ	6306 ZZ	30*47*7	30*47*7
4.00	4	Q3HG112M4D	Cast Iron	222	459	2xM25	140	190	112	290	12	70	28	60	31	8	6306 ZZ	6306 ZZ	30*47*7	30*47*7
5.50	2	Q3HSG132S2C	Cast Iron	222	471	2xM25	140	216	132	311	12	89	38	80	41	10	6308 ZZ	6306 ZZ	40*62*10	40*62*10
5.50	4	Q3HG132S4B	Cast Iron	273	533	2xM32	178	216	132	337	12	89	38	80	41	10	6308 ZZ	6308 ZZ	40*62*10	40*62*10
7.50	2	Q3HSG132S2D	Cast Iron	222	491	2xM25	140	216	132	311	12	89	38	80	41	10	6308 ZZ	6306 ZZ	40*62*10	40*62*10
7.50	4	Q3HG132M4D	Cast Iron	273	533	2xM32	178	216	132	337	12	89	38	80	41	10	6308 ZZ	6308 ZZ	40*62*10	40*62*10
11.00	2	Q3HG160M2C	Cast Iron	328	626	2xM32	210	254	160	387	14.5	108	42	110	45	12	6309 ZZ	6309 ZZ	45*72*10	45*72*10
11.00	2	Q3HSG160M2D	Cast Iron	273	563	2xM32	210	254	160	366	14.5	108	42	110	45	12	6309 ZZ	6309 ZZ	45*72*10	45*72*10
11.00	4	Q3HG160M4C	Cast Iron	328	626	2xM32	210	254	160	387	14.5	108	42	110	45	12	6309 ZZ	6309 ZZ	45*72*10	45*72*10
11.00	4	Q3HSG160M4C	Cast Iron	273	605	2xM32	210	254	160	366	14.5	108	42	110	45	12	6309 ZZ	6309 ZZ	45*72*10	45*72*10
15.00	2	Q3HG160M2D	Cast Iron	328	626	2xM32	210	254	160	387	14.5	108	42	110	45	12	6309 ZZ	6309 ZZ	45*72*10	45*72*10
15.00	2	Q3HSG160M2DE	Cast Iron	273	605	2xM32	210	254	160	366	14.5	108	42	110	45	12	6309 ZZ	6309 ZZ	45*72*10	45*72*10
15.00	4	Q3HG160L4B	Cast Iron	328	626	2xM32	210	254	160	387	14.5	108	42	110	45	12	6309 ZZ	6309 ZZ	45*72*10	45*72*10
18.50	2	Q3HG160L2C	Cast Iron	328	626	2xM32	210	254	160	387	14.5	108	42	110	45	12	6309 ZZ	6309 ZZ	45*72*10	45*72*10
18.50	4	Q3HSG180M4B	Cast Iron	328	680	2xM32	241	279	180	407	14.5	121	48	110	51.5	14	6310 ZZ	6310 ZZ	50*80*10	50*80*10
22.00	2	Q3HSG180M2B	Cast Iron	328	680	2xM32	241	279	180	407	14.5	121	48	110	51.5	14	6310 ZZ	6310 ZZ	50*80*10	50*80*10
22.00	4	Q3HG180L4B	Cast Iron	356	759	2xM40	279	279	180	441	14.5	121	48	110	51.5	14	6310 ZZ	6310 ZZ	50*80*10	50*80*10
30.00	2	Q3HG200L2C	Cast Iron	356	763	2xM50	305	318	200	458	18.5	133	55	110	59	16	6312 ZZ	6310 ZZ	60*90*10	50*80*10
30.00	4	Q3HG200L4D	Cast Iron	356	816	2xM50	305	318	200	458	18.5	133	55	110	59	16	6312 ZZ	6310 ZZ	60*90*10	50*80*10

(1) Tolerance DIN EN 50347 “j6” up to 28mm, “k6” above 28mm
(2) According to DIN 6885

DIMENSION - B3

				Main Dimensions			Foot Mounted Motors						Shaft				Bearing		Seal	
Power [kW]	Number of Poles	Motor Type	Housing Type	AC	L	O	B	A	H	HD	K	C	D[1]	E	GA	F[2]	Drive Side	Non drive Side	Drive Side	Non drive Side
37,00	2	Q3HG200L2D	Cast Iron	356	763	2xM50	305	318	200	458	18,5	133	55	110	59	16	6312 ZZ	6310 ZZ	60*90*10	50*80*10
37,00	4	Q3HG225S4B	Cast Iron	440	818	2xM50	286	356	225	524	18,5	149	60	140	64	18	6313 ZZ	6313 ZZ	65*100*13	65*100*13
45,00	2	Q3HG225M2B	Cast Iron	440	789	2xM50	311	356	225	524	18,5	149	55	110	59	16	6313 ZZ	6313 ZZ	65*100*13	65*100*13
45,00	4	Q3HG225M4C	Cast Iron	440	883	2xM50	311	356	225	524	18,5	149	60	140	64	18	6313 ZZ	6313 ZZ	65*100*13	65*100*13
55,00	2	Q3HG250M2B	Cast Iron	440	818	2xM50	349	406	250	549	24	168	60	140	64	18	6315 ZZ	6313 ZZ	75*112*12	75*112*12
55,00	4	Q3HG250M4B	Cast Iron	440	883	2xM50	349	406	250	549	24	168	65	140	69	18	6315 ZZ	6313 ZZ	65*100*13	65*100*13
75,00	2	Q3EP280M2C	Cast Iron	489	1025	2xM50	419	457	280	647	24	190	65	140	69	18	6316	6316	80*100*10	80*100*10
75,00	4	Q3EP280M4C	Cast Iron	489	1025	2xM50	419	457	280	647	24	190	75	140	79,5	20	6316	6316	80*100*10	80*100*10
90,00	2	Q3EP280M2D	Cast Iron	489	1025	2xM50	419	457	280	647	24	190	65	140	69	18	6316	6316	80*100*10	80*100*10
90,00	4	Q3EP280M4D	Cast Iron	489	1025	2xM50	419	457	280	647	24	190	75	140	79,5	20	6316	6316	80*100*10	80*100*10
110,00	2	Q3HG315S2D	Cast Iron	638	1070	2xM63	406	508	315	771	28	216	65	140	69	18	6316	6316	72*94*10	72*94*10
110,00	4	Q3HG315S4D	Cast Iron	638	1100	2xM63	406	508	315	771	28	216	80	170	85	22	6319	6319	85*107*10	85*107*10
132,00	2	Q3HG315M2B	Cast Iron	638	1070	2xM63	406	508	315	771	28	216	65	140	69	18	6316	6316	72*94*10	72*94*10
132,00	4	Q3HG315M4B	Cast Iron	638	1100	2xM63	406	508	315	771	28	216	80	170	85	22	6319	6319	85*107*10	85*107*10
160,00	2	Q3HG315L2A	Cast Iron	638	1070	2xM63	406	508	315	771	28	216	65	140	69	18	6316	6316	72*94*10	72*94*10
160,00	4	Q3HG315L4A	Cast Iron	638	1100	2xM63	406	508	315	771	28	216	80	170	85	22	6319	6319	85*107*10	85*107*10
200,00	2	Q3HG315L2C	Cast Iron	638	1070	2xM63	406	508	315	771	28	216	65	140	69	18	6316	6316	72*94*10	72*94*10
200,00	4	Q3HG315L4B	Cast Iron	638	1100	2xM63	406	508	315	771	28	216	80	170	85	22	6319	6319	85*107*10	85*107*10
250,00	2	Q3EP355M2C	Cast Iron	762	1512	4xM63	560	610	355	997	28	254	75	140	80	20	6317	6317	85*105*5,5	85*105*5,5
250,00	4	Q3EP355M4C	Cast Iron	762	1542	4xM63	560	610	355	997	28	254	95	170	100	25	6322	6322	110*130*5,5	110*130*5,5
315,00	2	Q3EP355L2B	Cast Iron	762	1512	4xM63	630	610	355	997	28	254	75	140	80	20	6317	6317	85*105*5,5	85*105*5,5
315,00	4	Q3EP355L4B	Cast Iron	762	1542	4xM63	630	610	355	997	28	254	95	170	100	25	6322	6322	110*130*5,5	110*130*5,5
355,00	2	Q3EP355L2C	Cast Iron	762	1512	4xM63	630	610	355	997	28	254	75	140	80	20	6317	6317	85*105*5,5	85*105*5,5
355,00	4	Q3EP355L4C	Cast Iron	762	1542	4xM63	630	610	355	997	28	254	95	170	100	25	6322	6322	110*130*5,5	110*130*5,5

(1) Tolerance DIN EN 50347 “j6” up to 28mm, “k6” above 28mm
(2) According to DIN 6885

DIMENSION - B5, B35

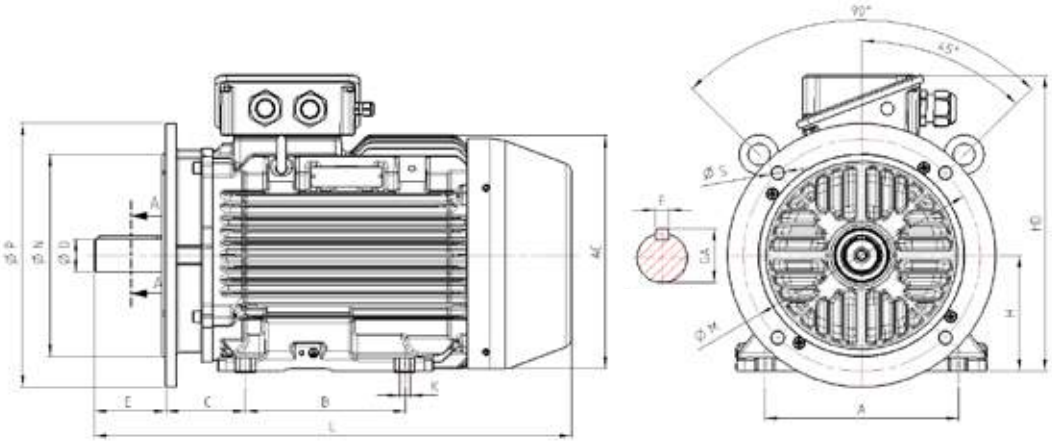

Power [kW]	Number of Poles	Motor Type	Housing Type	Main Dimensions			Foot Mounted Motors						Shaft				Bearing		Seal		Flange (FA B5, B35)				
				AC	L	O	B	A	H	HD	K	C	D	E	GA	F	Drive Side	Non drive Side	Drive Side	Non drive side	P	N[3]	M	R	S
0,55	4	Q3HG80M4C	Cast Iron	175	282	2xM25	100	125	80	225	10	50	19	40	21,5	6	6204 ZZ	6204 ZZ	20*30*7	20*30*7	200	130	165	-	12
0,75	2	Q3HG80M2C	Cast Iron	175	282	2xM25	100	125	80	225	10	50	19	40	21,5	6	6204 ZZ	6204 ZZ	20*30*7	20*30*7	200	130	165	-	12
0,75	4	Q3HG80M4D	Cast Iron	175	282	2xM25	100	125	80	225	10	50	19	40	21,5	6	6204 ZZ	6204 ZZ	20*30*7	20*30*7	200	130	165	-	12
1,10	2	Q3HG80M2D	Cast Iron	175	317	2xM25	100	125	80	225	10	50	19	40	21,5	6	6204 ZZ	6204 ZZ	20*30*7	20*30*7	200	130	165	-	12
1,10	4	Q3HG90L4C	Cast Iron	185	369	2xM25	125	140	90	232	10	56	24	50	27	8	6305 ZZ	6205 ZZ	25*40*7	25*40*7	200	130	165	-	13,5
1,50	2	Q3HG90L2C	Cast Iron	185	339	2xM25	125	140	90	232	10	56	24	50	27	8	6305 ZZ	6205 ZZ	25*40*7	25*40*7	200	130	165	-	13,5
1,50	4	Q3HG90L4D	Cast Iron	185	369	2xM25	125	140	90	232	10	56	24	50	27	8	6305 ZZ	6205 ZZ	25*40*7	25*40*7	200	130	165	-	13,5
2,20	2	Q3HG90L2D	Cast Iron	185	369	2xM25	125	140	90	232	10	56	24	50	27	8	6305 ZZ	6205 ZZ	25*40*7	25*40*7	200	130	165	-	13,5
2,20	4	Q3HG100L4C	Cast Iron	203	416	2xM25	140	160	100	266	12	63	28	60	31	8	6306 ZZ	6306 ZZ	30*47*7	30*47*7	250	180	215	-	14,5
3,00	2	Q3HG100L2D	Cast Iron	203	416	2xM25	140	160	100	266	12	63	28	60	31	8	6306 ZZ	6306 ZZ	30*47*7	30*47*7	250	180	215	-	14,5
3,00	4	Q3HG100L4D	Cast Iron	203	445	2xM25	140	160	100	266	12	63	28	60	31	8	6306 ZZ	6306 ZZ	30*47*7	30*47*7	250	180	215	-	14,5
4,00	2	Q3HG112M2C	Cast Iron	222	434	2xM25	140	190	112	290	12	70	28	60	31	8	6306 ZZ	6306 ZZ	30*47*7	30*47*7	250	180	215	-	14,5
4,00	2	Q3HSG112M2C	Cast Iron	205	416	2xM25	140	190	112	283	12	70	28	60	31	8	6306 ZZ	6306 ZZ	30*47*7	30*47*7	250	180	215	-	14,5
4,00	4	Q3HG112M4D	Cast Iron	222	459	2xM25	140	190	112	290	12	70	28	60	31	8	6306 ZZ	6306 ZZ	30*47*7	30*47*7	250	180	215	-	14,5
5,50	2	Q3HSG132S2C	Cast Iron	222	471	2xM25	140	216	132	311	12	89	38	80	41	10	6308 ZZ	6306 ZZ	40*62*10	40*62*10	300	230	265	-	14,5
5,50	4	Q3HG132S4B	Cast Iron	273	533	2xM32	178	216	132	337	12	89	38	80	41	10	6308 ZZ	6308 ZZ	40*62*10	40*62*10	300	230	265	-	14,5
7,50	2	Q3HSG132S2D	Cast Iron	222	491	2xM25	140	216	132	311	12	89	38	80	41	10	6308 ZZ	6306 ZZ	40*62*10	40*62*10	300	230	265	-	14,5
7,50	4	Q3HG132M4D	Cast Iron	273	533	2xM32	178	216	132	337	12	89	38	80	41	10	6308 ZZ	6308 ZZ	40*62*10	40*62*10	300	230	265	-	14,5
11,00	2	Q3HG160M2C	Cast Iron	328	626	2xM32	210	254	160	387	14,5	108	42	110	45	12	6309 ZZ	6309 ZZ	45*72*10	45*72*10	350	250	300	-	18,5
11,00	2	Q3HSG160M2D	Cast Iron	273	563	2xM32	210	254	160	366	14,5	108	42	110	45	12	6309 ZZ	6309 ZZ	45*72*10	45*72*10	350	250	300	-	18,5
11,00	4	Q3HG160M4C	Cast Iron	328	626	2xM32	210	254	160	387	14,5	108	42	110	45	12	6309 ZZ	6309 ZZ	45*72*10	45*72*10	350	250	300	-	18,5
11,00	4	Q3HSG160M4C	Cast Iron	273	605	2xM32	210	254	160	366	14,5	108	42	110	45	12	6309 ZZ	6309 ZZ	45*72*10	45*72*10	350	250	300	-	18,5
15,00	2	Q3HG160M2D	Cast Iron	328	626	2xM32	210	254	160	387	14,5	108	42	110	45	12	6309 ZZ	6309 ZZ	45*72*10	45*72*10	350	250	300	-	18,5
15,00	2	Q3HSG160M2DE	Cast Iron	273	605	2xM32	210	254	160	366	14,5	108	42	110	45	12	6309 ZZ	6309 ZZ	45*72*10	45*72*10	350	250	300	-	18,5
15,00	4	Q3HG160L4B	Cast Iron	328	626	2xM32	210	254	160	387	14,5	108	42	110	45	12	6309 ZZ	6309 ZZ	45*72*10	45*72*10	350	250	300	-	18,5
18,50	2	Q3HG160L2C	Cast Iron	328	626	2xM32	210	254	160	387	14,5	108	42	110	45	12	6309 ZZ	6309 ZZ	45*72*10	45*72*10	350	250	300	-	18,5
18,50	4	Q3HSG180M4B	Cast Iron	328	680	2xM32	241	279	180	407	14,5	121	48	110	51,5	14	6310 ZZ	6310 ZZ	50*80*10	50*80*10	350	250	300	-	18,5
22,00	2	Q3HSG180M2B	Cast Iron	328	680	2xM32	241	279	180	407	14,5	121	48	110	51,5	14	6310 ZZ	6310 ZZ	50*80*10	50*80*10	350	250	300	-	18,5
22,00	4	Q3HG180L4B	Cast Iron	356	759	2xM40	279	279	180	441	14,5	121	48	110	51,5	14	6310 ZZ	6310 ZZ	50*80*10	50*80*10	350	250	300	-	18,5
30,00	2	Q3HG200L2C	Cast Iron	356	763	2xM50	305	318	200	458	18,5	133	55	110	59	16	6312 ZZ	6310 ZZ	60*90*10	50*80*10	400	300	350	-	18,5
30,00	4	Q3HG200L4D	Cast Iron	356	816	2xM50	305	318	200	458	18,5	133	55	110	59	16	6312 ZZ	6310 ZZ	60*90*10	50*80*10	400	300	350	-	18,5
37,00	2	Q3HG200L2D	Cast Iron	356	763	2xM50	305	318	200	458	18,5	133	55	110	59	16	6312 ZZ	6310 ZZ	60*90*10	50*80*10	400	300	350	-	18,5
37,00	4	Q3HG225S4B	Cast Iron	440	818	2xM50	286	356	225	524	18,5	149	60	140	64	18	6313 ZZ	6313 ZZ	65*100*13	65*100*13	450	350	400	-	18,5
45,00	2	Q3HG225M2B	Cast Iron	440	789	2xM50	311	356	225	524	18,5	149	55	110	59	16	6313 ZZ	6313 ZZ	65*100*13	65*100*13	450	350	400	-	18,5
45,00	4	Q3HG225M4C	Cast Iron	440	883	2xM50	311	356	225	524	18,5	149	60	140	64	18	6313 ZZ	6313 ZZ	65*100*13	65*100*13	450	350	400	-	18,5
55,00	2	Q3HG250M2B	Cast Iron	440	818	2xM50	349	406	250	549	24	168	60	140	64	18	6315 ZZ	6313 ZZ	75*112*12	75*112*12	550	450	500	-	18,5
55,00	4	Q3HG250M4B	Cast Iron	440	883	2xM50	349	406	250	549	24	168	65	140	69	18	6315 ZZ	6313 ZZ	65*100*13	65*100*13	550	450	500	-	18,5
75,00	2	Q3EP280M2C	Cast Iron	489	1025	2xM50	419	457	280	647	24	190	65	140	69	18	6316	6316	80*100*10	80*100*10	550	450	500	-	18,5
75,00	4	Q3EP280M4C	Cast Iron	489	1025	2xM50	419	457	280	647	24	190	75	140	79,5	20	6316	6316	80*100*10	80*100*10	550	450	500	-	18,5
90,00	2	Q3EP280M2D	Cast Iron	489	1025	2xM50	419	457	280	647	24	190	65	140	69	18	6316	6316	80*100*10	80*100*10	550	450	500	-	18,5
90,00	4	Q3EP280M4D	Cast Iron	489	1025	2xM50	419	457	280	647	24	190	75	140	79,5	20	6316	6316	80*100*10	80*100*10	550	450	500	-	18,5
110,00	2	Q3HG315S2D	Cast Iron	638	1070	2xM63	406	508	315	771	28	216	65	140	69	18	6316	6316	72*94*10	72*94*10	660	550	600	-	24
110,00	4	Q3HG315S4D	Cast Iron	638	1100	2xM63	406	508	315	771	28	216	80	170	85	22	6319	6319	85*107*10	85*107*10	660	550	600	-	24

(1) Tolerance DIN EN 50347 “j6” up to 28mm, “k6” above 28mm
(2) According to DIN 6885
(3) Tolerance DIN EN 50347 “j6”

DIMENSION - B5, B35

Power [kW]	Number of Poles	Motor Type	Housing Type	Main Dimensions			Foot Mounted Motors						Shaft				Bearing		Seal		Flange (FA B5, B35)				
				AC	L	O	B	A	H	HD	K	C	D	E	GA	F	Drive Side	Non drive Side	Drive Side	Non drive side	P	N[3]	M	R	S
132.00	2	Q3HG315M2B	Cast Iron	638	1070	2xM63	406	508	315	771	28	216	65	140	69	18	6316	6316	72*94*10	72*94*10	660	550	600	-	24
132.00	4	Q3HG315M4B	Cast Iron	638	1100	2xM63	406	508	315	771	28	216	80	170	85	22	6319	6319	85*107*10	85*107*10	660	550	600	-	24
160.00	2	Q3HG315L2A	Cast Iron	638	1070	2xM63	406	508	315	771	28	216	65	140	69	18	6316	6316	72*94*10	72*94*10	660	550	600	-	24
160.00	4	Q3HG315L4A	Cast Iron	638	1100	2xM63	406	508	315	771	28	216	80	170	85	22	6319	6319	85*107*10	85*107*10	660	550	600	-	24
200.00	2	Q3HG315L2C	Cast Iron	638	1070	2xM63	406	508	315	771	28	216	65	140	69	18	6316	6316	72*94*10	72*94*10	660	550	600	-	24
200.00	4	Q3HG315L4B	Cast Iron	638	1100	2xM63	406	508	315	771	28	216	80	170	85	22	6319	6319	85*107*10	85*107*10	660	550	600	-	24
250.00	2	Q3EP355M2C	Cast Iron	762	1512	4xM63	560	610	355	997	28	254	75	140	80	20	6317	6317	85*105*5.5	85*105*5.5	800	680	740	-	24
250.00	4	Q3EP355M4C	Cast Iron	762	1542	4xM63	560	610	355	997	28	254	95	170	100	25	6322	6322	110*130*5.5	110*130*5.5	800	680	740	-	24
315.00	2	Q3EP355L2B	Cast Iron	762	1512	4xM63	630	610	355	997	28	254	75	140	80	20	6317	6317	85*105*5.5	85*105*5.5	800	680	740	-	24
315.00	4	Q3EP355L4B	Cast Iron	762	1542	4xM63	630	610	355	997	28	254	95	170	100	25	6322	6322	110*130*5.5	110*130*5.5	800	680	740	-	24
355.00	2	Q3EP355L2C	Cast Iron	762	1512	4xM63	630	610	355	997	28	254	75	140	80	20	6317	6317	85*105*5.5	85*105*5.5	800	680	740	-	24
355.00	4	Q3EP355L4C	Cast Iron	762	1542	4xM63	630	610	355	997	28	254	95	170	100	25	6322	6322	110*130*5.5	110*130*5.5	800	680	740	-	24

(1) Tolerance DIN EN 50347 “j6” up to 28mm, “k6” above 28mm
(2) According to DIN 6885
(3) Tolerance DIN EN 50347 “j6”

DIMENSION - B14b, B34b

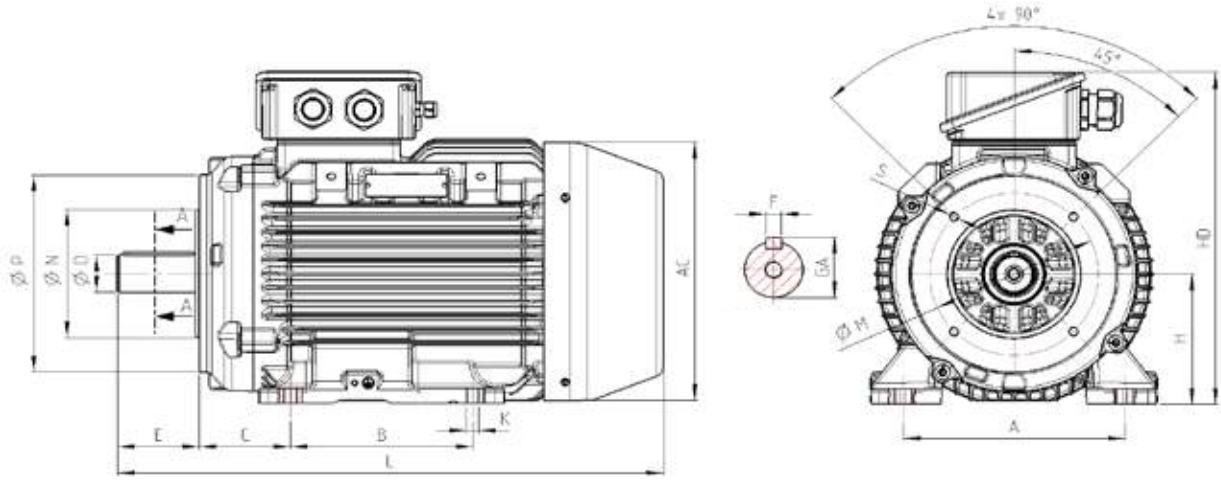

Power [kW]	Number of Poles	Motor Type	Housing Type	Main Dimensions			Foot Mounted Motors						Shaft				Bearing		Seal		Flange [FB B14b, B34b]				
				AC	L	O	B	A	H	HD	K	C	D	E	GA	F	Drive Side	Non drive Side	Drive Side	Non drive side	P	N[3]	M	R	S
0.55	4	Q3HG80M4C	Cast Iron	175	282	2xM25	100	125	80	225	10	50	19	40	21.5	6	6204 ZZ	6204 ZZ	20*30*7	20*30*7	120	80	100	-	M6
0.75	2	Q3HG80M2C	Cast Iron	175	282	2xM25	100	125	80	225	10	50	19	40	21.5	6	6204 ZZ	6204 ZZ	20*30*7	20*30*7	120	80	100	-	M6
0.75	4	Q3HG80M4D	Cast Iron	175	282	2xM25	100	125	80	225	10	50	19	40	21.5	6	6204 ZZ	6204 ZZ	20*30*7	20*30*7	120	80	100	-	M6
1.10	2	Q3HG80M2D	Cast Iron	175	317	2xM25	100	125	80	225	10	50	19	40	21.5	6	6204 ZZ	6204 ZZ	20*30*7	20*30*7	120	80	100	-	M6
1.10	4	Q3HG90L4C	Cast Iron	185	369	2xM25	125	140	90	232	10	56	24	50	27	8	6305 ZZ	6205 ZZ	25*40*7	25*40*7	140	95	115	-	M8
1.50	2	Q3HG90L2C	Cast Iron	185	339	2xM25	125	140	90	232	10	56	24	50	27	8	6305 ZZ	6205 ZZ	25*40*7	25*40*7	140	95	115	-	M8
1.50	4	Q3HG90L4D	Cast Iron	185	369	2xM25	125	140	90	232	10	56	24	50	27	8	6305 ZZ	6205 ZZ	25*40*7	25*40*7	140	95	115	-	M8
2.20	2	Q3HG90L2D	Cast Iron	185	369	2xM25	125	140	90	232	10	56	24	50	27	8	6305 ZZ	6205 ZZ	25*40*7	25*40*7	140	95	115	-	M8
2.20	4	Q3HG100L4C	Cast Iron	203	416	2xM25	140	160	100	266	12	63	28	60	31	8	6306 ZZ	6306 ZZ	30*47*7	30*47*7	160	110	130	-	M8
3.00	2	Q3HG100L2D	Cast Iron	203	416	2xM25	140	160	100	266	12	63	28	60	31	8	6306 ZZ	6306 ZZ	30*47*7	30*47*7	160	110	130	-	M8
3.00	4	Q3HG100L4D	Cast Iron	203	445	2xM25	140	160	100	266	12	63	28	60	31	8	6306 ZZ	6306 ZZ	30*47*7	30*47*7	160	110	130	-	M8
4.00	2	Q3HG112M2C	Cast Iron	222	434	2xM25	140	190	112	290	12	70	28	60	31	8	6306 ZZ	6306 ZZ	30*47*7	30*47*7	160	110	130	-	M8
4.00	2	Q3HSG112M2C	Cast Iron	205	416	2xM25	140	190	112	283	12	70	28	60	31	8	6306 ZZ	6306 ZZ	30*47*7	30*47*7	160	110	130	-	M8
4.00	4	Q3HG112M4D	Cast Iron	222	459	2xM25	140	190	112	290	12	70	28	60	31	8	6306 ZZ	6306 ZZ	30*47*7	30*47*7	160	110	130	-	M8
5.50	2	Q3HSG132S2C	Cast Iron	222	471	2xM25	140	216	132	311	12	89	38	80	41	10	6308 ZZ	6306 ZZ	40*62*10	40*62*10	300	130	165	-	M10
5.50	4	Q3HG132S4B	Cast Iron	273	533	2xM32	178	216	132	337	12	89	38	80	41	10	6308 ZZ	6308 ZZ	40*62*10	40*62*10	300	130	165	-	M10
7.50	2	Q3HSG132S2D	Cast Iron	222	491	2xM25	140	216	132	311	12	89	38	80	41	10	6308 ZZ	6306 ZZ	40*62*10	40*62*10	300	130	165	-	M10
7.50	4	Q3HG132M4D	Cast Iron	273	533	2xM32	178	216	132	337	12	89	38	80	41	10	6308 ZZ	6308 ZZ	40*62*10	40*62*10	300	130	165	-	M10
11.00	2	Q3HG160M2C	Cast Iron	328	626	2xM32	210	254	160	387	14.5	108	42	110	45	12	6309 ZZ	6309 ZZ	45*72*10	45*72*10	250	180	215	-	M10
11.00	2	Q3HSG160M2D	Cast Iron	273	563	2xM32	210	254	160	366	14.5	108	42	110	45	12	6309 ZZ	6309 ZZ	45*72*10	45*72*10	250	180	215	-	M10
11.00	4	Q3HG160M4C	Cast Iron	328	626	2xM32	210	254	160	387	14.5	108	42	110	45	12	6309 ZZ	6309 ZZ	45*72*10	45*72*10	250	180	215	-	M10
11.00	4	Q3HSG160M4C	Cast Iron	273	605	2xM32	210	254	160	366	14.5	108	42	110	45	12	6309 ZZ	6309 ZZ	45*72*10	45*72*10	250	180	215	-	M10
15.00	2	Q3HG160M2D	Cast Iron	328	626	2xM32	210	254	160	387	14.5	108	42	110	45	12	6309 ZZ	6309 ZZ	45*72*10	45*72*10	250	180	215	-	M10
15.00	2	Q3HSG160M2DE	Cast Iron	273	605	2xM32	210	254	160	366	14.5	108	42	110	45	12	6309 ZZ	6309 ZZ	45*72*10	45*72*10	250	180	215	-	M10
15.00	4	Q3HG160L4B	Cast Iron	328	626	2xM32	210	254	160	387	14.5	108	42	110	45	12	6309 ZZ	6309 ZZ	45*72*10	45*72*10	250	180	215	-	M10
18.50	2	Q3HG160L2C	Cast Iron	328	626	2xM32	210	254	160	387	14.5	108	42	110	45	12	6309 ZZ	6309 ZZ	45*72*10	45*72*10	250	180	215	-	M10

(1) Tolerance DIN EN 50347 “j6” up to 28mm, “k6” above 28mm
(2) According to DIN 6885
(3) Tolerance DIN EN 50347 “j6”

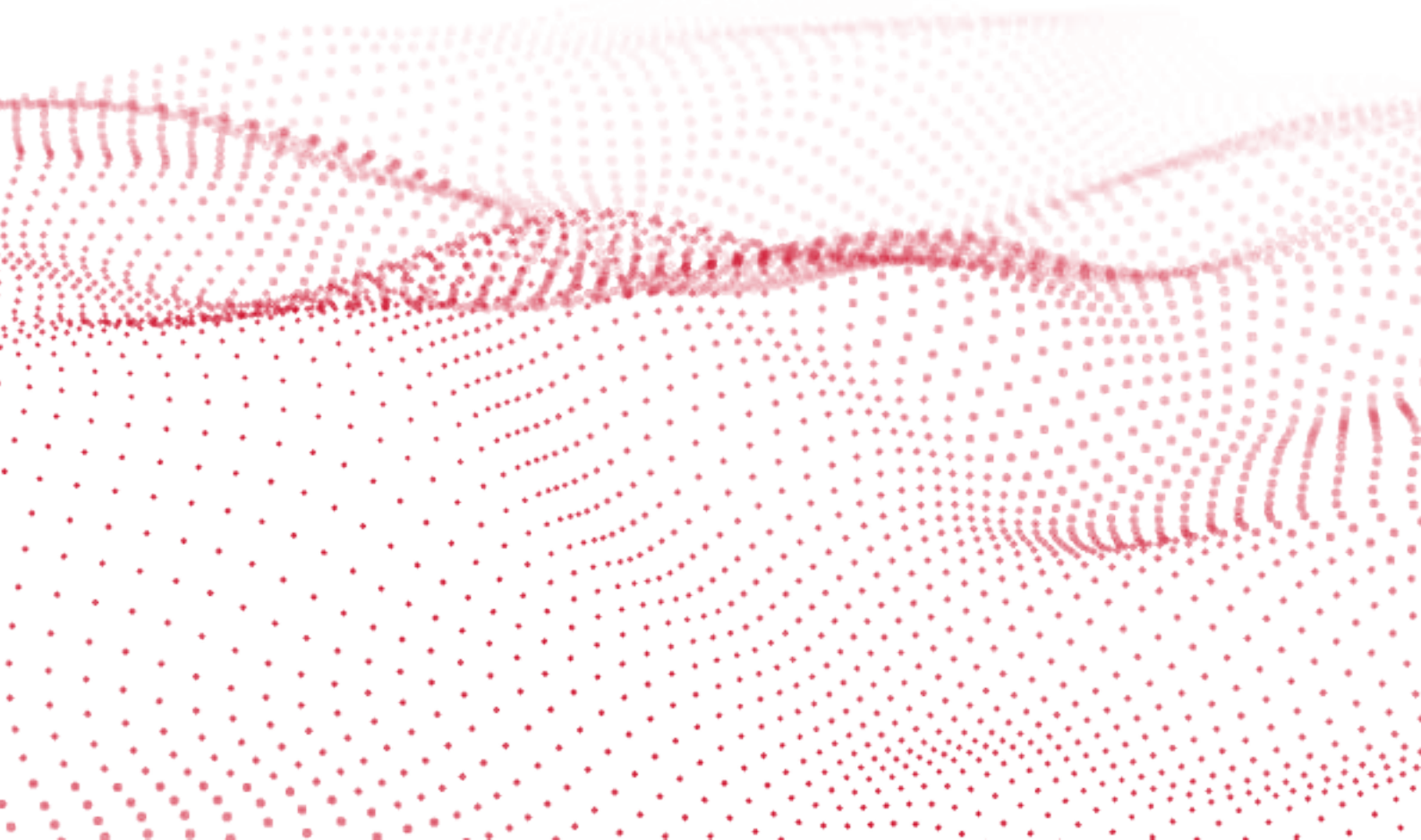

SMOKE EXTRACTION MOTORS

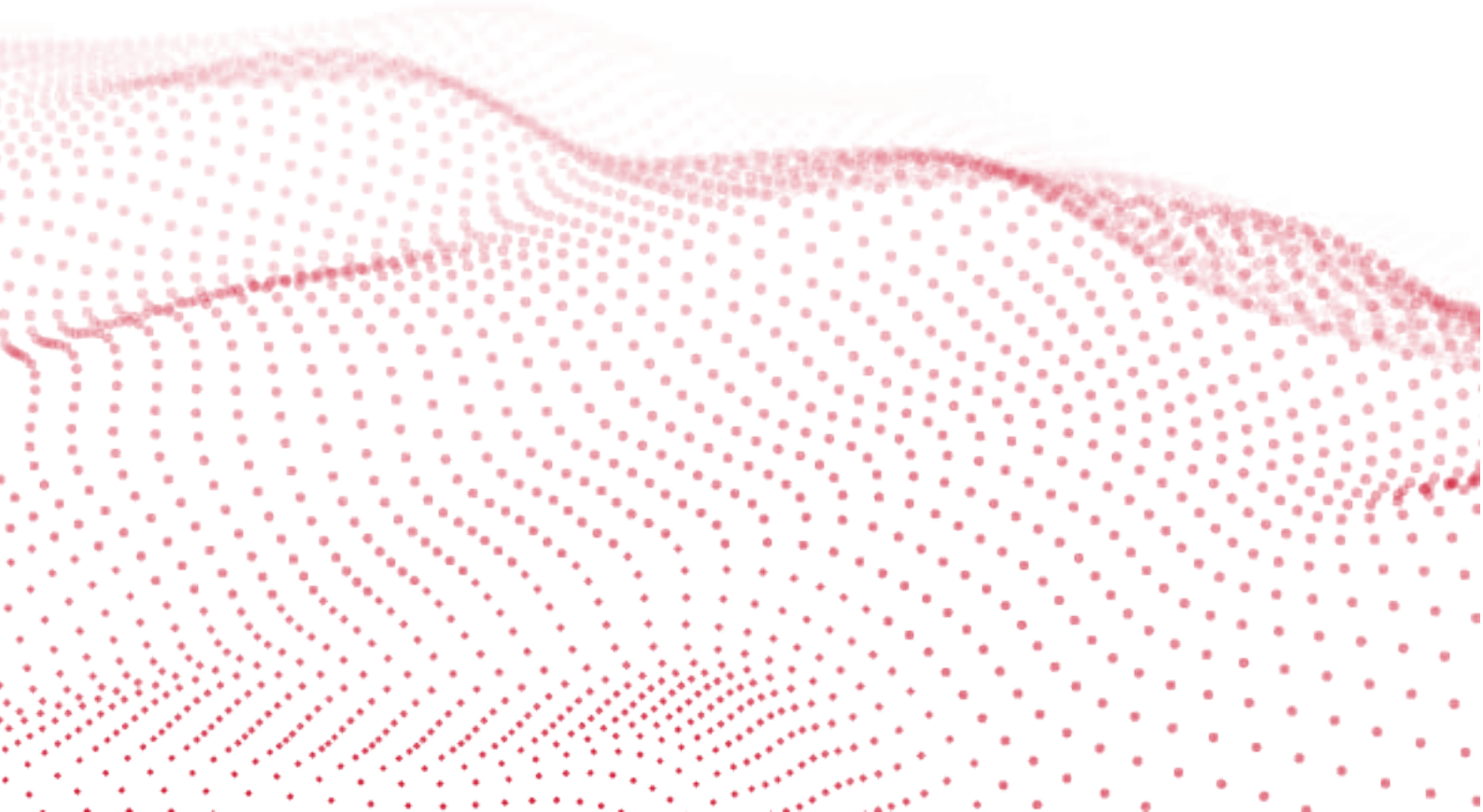

ELECTRICAL CHARACTERISTICS AT 50 Hz

	MOTOR TYPE	HOUSING TYPE	RATED VALUES					STARTING VALUES				"Break-down Torque Ratio	EFFICIENCY*			Cosφ	J	Weight [B3]	Sound Pressure Level
			POWER		SPEED	CURRENT	TORQUE	CURRENT IA / IN		TORQUE MA / MN			η %						
			kW	HP	rpm	A	Nm	⅄	Δ	⅄	Δ	Mk/ Mn	4/4	3/4	2/4	4/4	kgm2	kg	dBA**
	2 pole 3000 rpm																		
230/400V	S3H80M2C	Aluminium	0.75	1.00	2903	3.1	2.5	8.3	-	3.9	-	4.3	0.81	79.5	75.8	0.81	0.00140	11	57
230/400V	S3H80M2D	Aluminium	1.10	1.50	2908	4.3	3.6	9.0	-	4.0	-	4.3	0.83	80.2	76.4	0.83	0.00170	13	57
230/400V	S3H90L2C	Aluminium	1.50	2.00	2926	5.4	4.9	9.5	-	3.1	-	4.6	84.2	86.2	84.2	0.87	0.00249	17	62
230/400V	S3H90L2D	Aluminium	2.20	3.00	2931	8.5	7.2	8.1	-	2.6	-	4.1	85.9	85.0	83.0	0.81	0.00283	18	62
230/400V	S3H100L2D	Aluminium	3.00	4.00	2934	10.0	9.8	9.4	-	3.4	-	4.0	87.1	85.3	85.1	0.90	0.00536	26	63
400/690V	S3H112M2C	Aluminium	4.00	5.50	2917	7.5	13.1	-	9.4	-	3.2	4.1	88.1	88.0	85.8	0.92	0.00604	30	67
400/690V	S3H132S2C	Aluminium	5.50	7.50	2927	11.1	18.0	-	8.4	-	3.2	4.3	89.2	89.0	88.5	0.88	0.02792	50	69
400/690V	S3H132S2D	Aluminium	7.50	10.00	2934	14.5	24.3	-	9.4	-	3.3	4.8	90.1	89.0	88.5	0.86	0.03091	54	69
400/690V	S3H160M2C	Aluminium	11.00	15.00	2971	20.8	35.4	-	11.1	-	3.3	5.1	91.2	89.9	87.6	0.86	0.03517	81	70
400/690V	S3H160M2D	Aluminium	15.00	20.00	2967	27.6	48.3	-	10.9	-	3.4	4.9	91.9	90.4	87.9	0.87	0.04322	87	70
400/690V	S3H160L2C	Aluminium	18.50	25.00	2972	37.4	59.3	-	11.0	-	3.5	5.4	92.4	90.7	88.0	0.80	0.04809	94	70
400/690V	S3H180M2A	Aluminium	22.00	30.00	2969	40.3	71.1	-	9.7	-	3.0	4.1	92.7	92.8	91.9	0.90	0.09460	115	77
400/690V	S3H200L2C	Aluminium	30.00	40.00	2970	53.3	97.3	-	10.2	-	3.0	7.0	93.3	92.8	91.6	0.90	0.10277	151	78
400/690V	S3H200L2D	Aluminium	37.00	50.00	2969	62.8	118.6	-	9.8	-	2.9	4.0	93.7	93.7	93.1	0.93	0.11383	166	78
400/690V	S3H225M2B	Aluminium	45.00	60.00	2976	77.7	144.4	-	10.4	-	3.5	5.6	94.0	94.4	93.5	0.89	0.23500	213	80
400/690V	S3EP250M2B	Cast Iron	55.00	75.00	2983	96.3	175.9	-	8.5	-	2.4	4.4	94.3	93.6	92.1	0.92	0.48700	475	81
400/690V	S3H280M2C	Cast Iron	75.00	100.00	2976	122.7	239.7	-	7.7	-	2.8	3.6	94.7	94.2	93.1	0.93	0.54000	585	82
400/690V	S3EP280M2D	Cast Iron	90.00	125.00	2980	147.7	288.3	-	9.0	-	2.6	6.9	95.0	95.1	94.7	0.93	0.64500	596	82
	4 pole 1500 rpm																		
230/400V	S3H80M4C	Aluminium	0.55	0.75	1455	2.5	3.6	5.0	-	2.7	-	3.6	80.8	78.2	77.1	0.71	0.00190	11	53
230/400V	S3H80M4D	Aluminium	0.75	1.00	1458	3.3	4.9	7.4	-	3.2	-	4.0	82.5	80.4	77.1	0.71	0.00261	12	52
230/400V	S3H90L4C	Aluminium	1.10	1.50	1448	4.3	7.3	7.5	-	3.4	-	3.9	84.1	81.0	77.3	0.77	0.00464	18	53
230/400V	S3H90L4D	Aluminium	1.50	2.00	1452	6.1	9.9	8.0	-	3.8	-	4.3	85.3	84.9	82.0	0.74	0.00526	20	53
230/400V	S3H100L4C	Aluminium	2.20	3.00	1458	9.2	14.4	7.5	-	3.5	-	4.3	86.7	85.4	83.5	0.80	0.00871	26	56
230/400V	S3H100L4D	Aluminium	3.00	4.00	1457	11.3	19.7	8.6	-	3.3	-	4.0	87.7	86.1	84.4	0.78	0.01059	30	58
400/690V	S3H112M4D	Aluminium	4.00	5.50	1765	9.3	26.2	-	8.8	-	3.7	4.6	88.6	87.3	86.4	0.78	0.01383	35	54
400/690V	S3H132S4B	Aluminium	5.50	7.50	1473	11.2	35.5	-	8.7	-	2.9	3.9	89.6	87.3	85.0	0.81	0.03560	52	60
400/690V	S3H132M4D	Aluminium	7.50	10.00	1474	15.2	48.5	-	8.0	-	2.3	3.6	90.4	90.0	88.7	0.81	0.04030	64	63
400/690V	S3H160L4A	Aluminium	11.00	15.00	1475	22.0	71.3	-	7.3	-	2.7	3.1	91.4	91.6	90.7	0.79	0.05940	90	63
400/690V	S3H160L4B	Aluminium	15.00	20.00	1480	31.7	96.9	-	7.9	-	3.0	3.6	92.1	91.4	89.6	0.74	0.09005	100	62
400/690V	S3H180M4B	Aluminium	18.50	25.00	1485	35.0	118.9	-	9.2	-	3.0	3.6	92.6	91.8	90.3	0.84	0.18660	142	68
400/690V	S3H180L4B	Aluminium	22.00	30.00	1487	42.4	141.1	-	9.5	-	3.1	3.8	93.0	92.6	91.5	0.82	0.18660	157	68
400/690V	S3H200L4D	Aluminium	30.00	40.00	1484	57.2	194.2	-	7.5	-	2.1	3.3	93.6	93.8	93.6	0.83	0.22166	176	68
400/690V	S3H225S4B	Aluminium	37.00	50.00	1481	59.8	238.6	-	8.8	-	2.1	3.7	93.9	94.1	93.4	0.91	0.36400	190	71
400/690V	S3H225M4C	Aluminium	45.00	60.00	1485	85.1	291.9	-	7.4	-	2.6	3.8	94.2	93.8	93.1	0.83	0.43500	236	71
400/690V	S3EP250M4E	Cast Iron	55.00	75.00	1492	104.7	353.1	-	8.2	-	3.0	3.5	94.6	93.8	91.5	0.81	0.90800	494	72
400/690V	S3EP280M4D	Cast Iron	75.00	100.00	1492	136.3	480.3	-	7.7	-	2.2	3.7	95.0	94.3	93.4	0.83	1.06100	658	73

* According to IEC 60034-2-1

** The sound pressure measurements are taken 1m away from the motor

** Tolerance +3 dBA

F300 SERIES DIMENSIONS

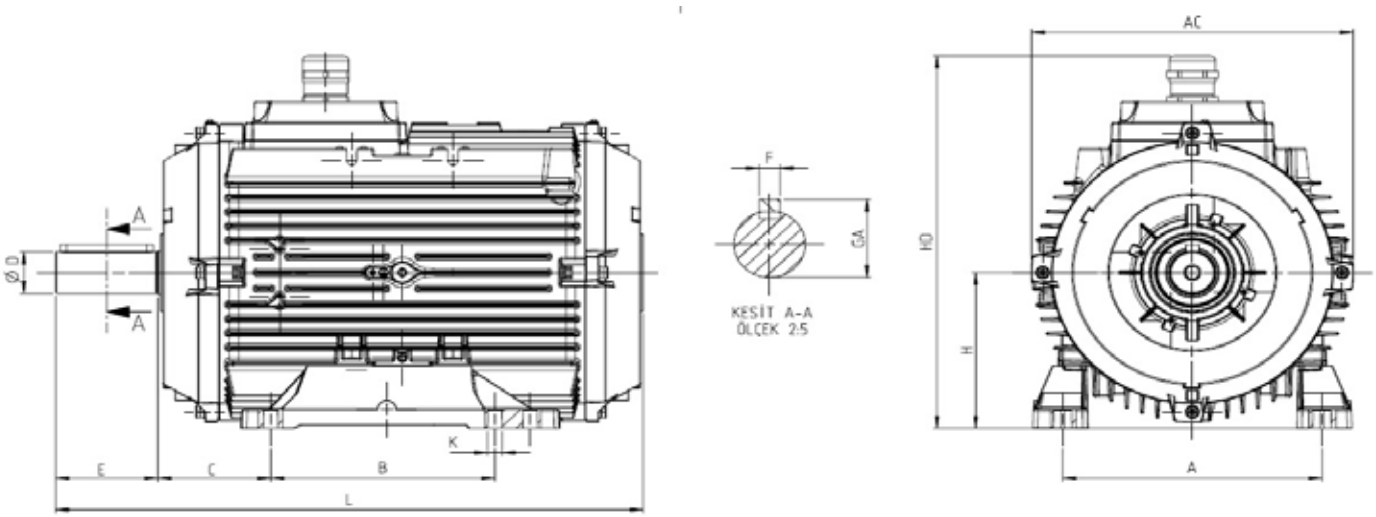

Power [kW]	Number of Poles	Motor Type	Housing Type	Main Dimensions			Foot Mounted Motors						Shaft				Bearing		Seal	
				AC	L	O	B	A	H	HD	K	C	D	E	GA	F	Drive Side	Non drive Side	Drive Side	Non drive side
0.55	4	S3H80M4C	Aluminum	173	263	M20	100	125	80	212	10	50	19	40	21.5	6	6204 ZZ	6204 ZZ	20*30*7	-
0.75	2	S3H80M2C	Aluminum	173	263	M20	100	125	80	212	10	50	19	40	21.5	6	6204 ZZ	6204 ZZ	20*30*7	-
0.75	4	S3H80M4D	Aluminum	158	263	M20	100	125	80	216	10	50	19	40	21.5	6	6204 ZZ	6204 ZZ	20*30*7	-
1.10	2	S3H80M2D	Aluminum	173	263	M20	100	125	80	212	10	50	19	40	21.5	6	6204 ZZ	6204 ZZ	20*30*7	-
1.10	4	S3H90L4C	Aluminum	188	308	M25	100	140	90	238	10	56	24	50	27	8	6305 ZZ	6205 ZZ	25*40*7	-
1.50	2	S3H90L2C	Aluminum	188	308	M25	100	140	90	238	10	56	24	50	27	8	6305 ZZ	6205 ZZ	25*40*7	-
1.50	4	S3H90L4D	Aluminum	188	346	M25	100	140	90	238	10	56	24	50	27	8	6305 ZZ	6205 ZZ	25*40*7	-
2.20	2	S3H90L2D	Aluminum	188	308	M25	100	140	90	238	10	56	24	50	27	8	6305 ZZ	6205 ZZ	25*40*7	-
2.20	4	S3H100L4C	Aluminum	196	348	M25	140	160	100	257	12	63	28	60	31	8	6205 ZZ	6306 ZZ	30*47*7	-
3.00	2	S3H100L2D	Aluminum	196	348	M25	140	160	100	257	12	63	28	60	31	8	6306 ZZ	6205 ZZ	30*47*7	-
3.00	4	S3H100L4D	Aluminum	196	348	M25	140	160	100	257	12	63	28	60	31	8	6205 ZZ	6306 ZZ	30*47*7	-
4.00	2	S3H112M2C	Aluminum	225	355	M25	140	190	112	277	12	70	28	60	31	8	6306 ZZ	6206 ZZ	30*47*7	-
4.00	4	S3H112M4D	Aluminum	225	381	M25	140	190	112	277	12	70	28	60	31	8	6206 ZZ	6306 ZZ	30*47*7	-
5.50	2	S3H132S2C	Aluminum	260	430	M32	140	216	132	323	12	89	38	80	41	10	6208 ZZ	6208 ZZ	40*62*10	-
5.50	4	S3H132S4B	Aluminum	260	430	M32	140	216	132	323	12	89	38	80	41	10	6208 ZZ	6208 ZZ	40*62*10	-
7.50	2	S3H132S2D	Aluminum	260	430	M32	140	216	132	323	12	89	38	80	41	10	6208 ZZ	6208 ZZ	40*62*10	-
7.50	4	S3H132M4D	Aluminum	260	490	M32	178	216	132	312	12	89	38	80	41	10	6208 ZZ	6208 ZZ	40*62*10	-
11.00	2	S3H160M2C	Aluminum	314	539	M32	210	254	160	374	14.5	108	42	110	45	12	6309 ZZ	6209 ZZ	45*72*10	-
11.00	4	S3H160L4A	Aluminum	314	539	M32	210	254	160	374	14.5	108	42	110	45	12	6309 ZZ	6208 ZZ	45*72*10	-
15.00	2	S3H160M2D	Aluminum	314	539	M32	210	254	160	374	14.5	108	42	110	45	12	6309 ZZ	6209 ZZ	45*72*10	-
15.00	4	S3H160L4B	Aluminum	314	539	M32	210	254	160	374	14.5	108	42	110	45	12	6309 ZZ	6209 ZZ	45*72*10	-
18.50	2	S3H160L2C	Aluminum	314	539	M32	210	254	160	374	14.5	108	42	110	45	12	6309 ZZ	6209 ZZ	45*72*10	-
18.50	4	S3H180M4B	Aluminum	346	632	M40	241	279	180	430	14.5	121	48	110	51.5	14	6310 ZZ	6310 ZZ	50*80*10	-
22.00	2	S3H180M2A	Aluminum	346	632	M40	241	279	180	430	14.5	121	48	110	51.5	14	6310 ZZ	6310 ZZ	50*80*10	-
22.00	4	S3H180L4B	Aluminum	346	682	M40	241	279	180	430	14.5	121	48	110	51.5	14	6310 ZZ	6310 ZZ	50*80*10	-
30.00	2	S3H200L2C	Aluminum	388	692	M40	267	318	200	450	18.5	133	55	110	59	16	6310 ZZ	6312 ZZ	50*80*10	-
30.00	4	S3H200L4D	Aluminum	388	692	M40	267	318	200	450	18.5	133	55	110	59	16	6310 ZZ	6312 ZZ	50*80*10	-
37.00	2	S3H200L2D	Aluminum	388	692	M40	267	318	200	450	18.5	133	55	110	59	16	6310 ZZ	6312 ZZ	50*80*10	-
37.00	4	S3H225S4B	Aluminum	442	695	M40	286	356	225	500	18.5	149	60	140	64	18	6313 ZZ	6313 ZZ	65*100*13	-
45.00	2	S3H225M2B	Aluminum	442	665	M40	286	356	225	500	18.5	149	55	110	59	16	6313 ZZ	6313 ZZ	65*100*13	-
45.00	4	S3H225M4C	Aluminum	442	695	M40	286	356	225	500	18.5	149	60	140	64	18	6313 ZZ	6313 ZZ	65*100*13	-
55.00	2	S3EP250M2B	Cast Iron	522	795	M50	311	406	250	578	24	168	60	140	64	18	6316 Z	6316 Z	80*100*10	-
55.00	4	S3EP250M4E	Cast Iron	522	795	M50	311	406	250	578	24	168	65	140	69	18	6316 Z	6316 Z	80*100*10	-
75.00	2	S3H280M2C	Cast Iron	550	929	M50	368	457	280	612	24	190	65	140	69	18	6316 Z	6316 Z	80*100*10	-
75.00	4	S3EP280M4D	Cast Iron	550	929	M50	368	457	280	612	24	190	75	140	79.5	20	6316 Z	6316 Z	80*100*10	-
90.00	2	S3EP280M2D	Cast Iron	550	929	M50	368	457	280	612	24	190	65	140	69	18	6316 Z	6316 Z	80*100*10	-

ELECTRICAL CHARACTERISTICS AT 50 Hz

	MOTOR TYPE	HOUSING TYPE	RATED VALUES					STARTING VALUES				"Break-down Torque Ratio	EFFICIENCY*			Cosφ	J	Weight [B3]	Sound Pressure Level
			POWER		SPEED	CURRENT	TORQUE	CURRENT IA / IN		TORQUE MA / MN			η %						
			kW	HP	rpm	A	Nm	⅄	Δ	⅄	Δ	Mk/ Mn	4/4	3/4	2/4	4/4	kgm2	kg	dBA**
	2 pole 3000 rpm																		
230/400V	S2H80M2B	Aluminium	0.75	1.00	2873	3.0	2.5	6.7	-	3.3	-	3.5	77.4	76.5	74.3	0.84	0.00205	8.85	54
230/400V	S2H80M2C	Aluminium	1.10	1.50	2885	4.3	3.6	7.5	-	3.6	-	3.8	79.6	78.8	76.0	0.81	0.00205	10.3	54
230/400V	S2H90S2B	Aluminium	1.50	2.00	2923	5.7	4.9	8.9	-	2.9	-	3.9	81.3	79.3	78.3	0.84	0.00176	12.2	62
230/400V	S2H90L2C	Aluminium	2.20	3.00	2913	7.8	7.3	8.8	-	2.9	-	3.9	83.2	82.6	84.6	0.86	0.00231	16.8	62
230/400V	S2H100L2C	Aluminium	3.00	4.00	2920	10.3	9.9	10.1	-	3.7	-	4.5	84.6	85.1	83.3	0.89	0.00266	23.2	66
400/690V	S2HS112M2B	Aluminium	4.00	5.50	2927	7.7	13.0	-	10.2	-	3.5	4.1	85.8	85.9	84.3	0.89	0.00487	26.0	68
400/690V	S2HS132S2B	Aluminium	5.50	7.50	2930	11.0	18.0	-	11.5	-	4.1	5.3	87.0	86.1	83.2	0.85	0.00703	33.7	69
400/690V	S2HS132S2C	Aluminium	7.50	10.00	2918	14.9	24.8	-	10.7	-	3.9	4.6	88.1	85.9	83.4	0.85	0.00772	36.5	69
400/690V	S2H160M2B	Aluminium	11.00	15.00	2964	20.8	35.5	-	9.6	-	2.9	4.2	89.4	86.6	85.0	0.87	0.03952	78.8	70
400/690V	S2H160M2C	Aluminium	15.00	20.00	2967	28.4	48.3	-	10.7	-	3.5	5.0	90.3	88.1	85.0	0.85	0.04015	82.8	70
400/690V	S2H160L2B	Aluminium	18.50	25.00	2964	33.8	59.4	-	10.3	-	3.2	4.5	90.9	89.4	87.4	0.88	0.04613	88.0	70
400/690V	S2H180M2A	Aluminium	22.00	30.00	2971	40.0	70.7	-	9.0	-	2.5	4.0	91.3	90.5	90.6	0.90	0.10913	118.0	67
400/690V	S2H200M2A	Aluminium	30.00	40.00	2970	54.6	96.5	-	9.0	-	2.6	4.2	92.0	90.5	87.9	0.88	0.08643	136.2	78
400/690V	S2H200L2C	Aluminium	37.00	50.00	2971	68.9	119.0	-	9.5	-	2.9	4.4	92.5	92.3	90.1	0.85	0.10277	178.0	78
400/690V	S2H225M2A	Aluminium	45.00	60.00	2980	85.3	144.2	-	11.2	-	3.7	5.1	92.9	90.8	87.8	0.83	0.23500	201.0	81
400/690V	S2EP250M2B	Cast Iron	55.00	75.00	2987	103.4	175.4	-	11.2	-	3.5	5.4	93.2	92.5	91.6	0.86	0.48700	486.0	82
400/690V	S2EP280M2C	Cast Iron	75.00	100.00	2980	129.0	240.6	-	8.9	-	2.4	3.2	93.8	92.1	90.1	0.90	0.54000	576.0	84
400/690V	S2EP280M2D	Cast Iron	90.00	125.00	2985	157.0	286.8	-	8.7	-	2.6	3.2	94.5	93.5	92.6	0.89	0.64500	610.0	84
	4 pole 1500 rpm																		
230/400V	S2H80M4B	Aluminium	0.55	0.75	1443	3.3	5.0	6.1	-	2.7	-	3.4	79.6	78.8	74.0	0.72	0.00216	10.8	49
230/400V	S2H80M4C	Aluminium	0.75	1.00	1450	2.4	3.6	5.5	-	2.2	-	3.0	77.1	76.6	72.3	0.72	0.00216	9.1	54
230/400V	S2H90S4B	Aluminium	1.10	1.50	1452	4.6	7.2	7.1	-	3.1	-	3.8	81.4	80.8	76.8	0.74	0.00205	15.7	54
230/400V	S2H90L4C	Aluminium	1.50	2.00	1443	6.2	9.9	7.7	-	3.6	-	4.2	82.8	81.6	80.4	0.73	0.00328	17.5	54
230/400V	S2H100L4B	Aluminium	2.20	3.00	1455	8.2	14.4	8.3	-	3.2	-	3.9	84.3	84.2	79.5	0.79	0.00694	24.5	55
230/400V	S2H100L4C	Aluminium	3.00	4.00	1455	11.6	19.8	8.2	-	3.4	-	4.0	85.5	84.4	80.4	0.77	0.00694	26.0	55
400/690V	S2HS112M4C	Aluminium	4.00	5.50	1453	8.6	26.1	-	7.5	-	3.1	3.6	86.6	86.1	84.4	0.78	0.01085	30.5	58
400/690V	S2H132S4A	Aluminium	5.50	7.50	1470	11.1	35.7	-	7.9	-	2.4	3.5	87.7	86.1	85.2	0.84	0.01414	48.6	59
400/690V	S2H132M4C	Aluminium	7.50	10.00	1468	15.2	48.8	-	7.7	-	2.2	3.5	88.7	88.5	87.0	0.82	0.03560	54.8	62
400/690V	S2H160M4B	Aluminium	11.00	15.00	1474	22.3	71.4	-	6.3	-	2.3	2.7	89.8	88.4	86.7	0.81	0.05468	75.6	63
400/690V	S2H160L4A	Aluminium	15.00	20.00	1470	29.5	98.1	-	5.5	-	2.0	2.3	90.6	89.1	89.9	0.83	0.09940	86.2	63
400/690V	S2H180M4A	Aluminium	18.50	25.00	1485	37.6	119.1	-	8.3	-	2.6	3.6	91.2	90.8	89.0	0.79	0.10913	118.0	67
400/690V	S2H180L4B	Aluminium	22.00	30.00	1484	42.4	141.6	-	7.4	-	2.4	3.1	91.6	91.5	90.1	0.83	0.11398	127.0	67
400/690V	S2H200L4C	Aluminium	30.00	40.00	1480	56.9	195.4	-	6.7	-	2.0	2.7	92.3	91.9	91.1	0.85	0.18660	158.5	70
400/690V	S2H225S4A	Aluminium	37.00	50.00	1485	73.1	238.5	-	7.7	-	2.7	4.2	92.7	92.4	91.0	0.80	0.36420	203.0	71
400/690V	S2H225M4B	Aluminium	45.00	60.00	1485	85.5	290.0	-	7.4	-	2.5	4.0	93.1	93.2	92.5	0.83	0.43500	223.8	71
400/690V	S2EP250M4D	Cast Iron	55.00	75.00	1489	104.8	352.1	-	6.5	-	2.2	2.9	93.5	94.0	93.3	0.81	0.36400	465.0	72
400/690V	S2EP280M4B	Cast Iron	75.00	100.00	1490	137.9	480.9	-	7.7	-	2.2	3.7	95.0	94.3	93.4	0.83	1.06100	658.0	73

* According to IEC 60034-2-1
** The sound pressure measurements are taken 1m away from the motor

** Tolerance +3 dBA
** According to EN 12101-3

ELECTRICAL CHARACTERISTICS AT 50 Hz

	MOTOR TYPE	HOUSING TYPE	RATED VALUES					STARTING VALUES				"Break-down Torque Ratio	EFFICIENCY*			Cosφ	J	Weight [B3]	Sound Pressure Level
			POWER		SPEED	CURRENT	TORQUE	CURRENT		TORQUE			η %						
								IA / IN		MA / MN									
			kW	HP	rpm	A	Nm	λ	Δ	λ	Δ	Mk/ Mn	4/4	3/4	2/4	4/4	kgm2	kg	dBA**
	2 -4pole 3000-1500 rpm																		
400 V [Y/Y/Y]	S2H80M2-4A	Aluminium	0.80	1.07	2848	1.9	2.7	4.6	-	2.0	-	2.4	74.5	-	-	0.83	0.00205	9	56
			0.20	0.27	1437	0.5	1.3	-	4.6	-	1.7	2.5	71.4	-	-	0.82			46
	S2H80M2-4B	Aluminium	1.10	1.47	2865	2.3	3.7	5.0	-	2.0	-	2.3	79.6	-	-	0.87	0.00205	11	54
			0.25	0.33	1483	1.2	1.6	-	7.5	-	5.4	7.9	68.5	-	-	0.44			54
	S2H90S2-4B	Aluminium	1.50	2.00	2860	3.3	5.0	5.7	-	2.3	-	2.7	75.0	-	-	0.88	0.00267	16	54
			0.37	0.49	1480	1.5	2.4	-	9.4	-	5.8	8.5	71.5	-	-	0.49			57
	S2H90L2-4C	Aluminium	2.20	2.93	2835	4.5	7.4	5.1	-	1.8	-	2.2	76.5	-	-	0.92	0.00205	19	55
			0.50	0.67	1475	1.8	3.2	-	9.5	-	5.7	7.5	75.0	-	-	0.54			58
	S2H100L2-4B	Aluminium	2.50	3.33	2910	5.2	8.2	8.4	-	3.1	-	3.7	83.8	-	-	0.88	0.00521	26	70
			0.65	0.87	1452	1.4	4.3	-	9.4	-	2.4	3.1	78.0	-	-	0.86			58
	S2H100L2-4D	Aluminium	3.10	4.13	2913	6.3	10.2	8.2	-	2.8	-	3.3	82.5	-	-	0.90	0.00694	30	60
			0.80	1.07	1448	1.7	5.3	-	6.4	-	2.1	2.9	79.0	-	-	0.87			57
	S2H112M2-4D	Aluminium	4.40	5.87	2925	9.1	14.3	9.0	-	3.2	-	3.9	86.2	-	-	0.85	0.01383	37	71
			1.10	1.47	1455	2.2	7.2	-	7.4	-	2.3	3.3	81.4	-	-	0.85			60
	S2H132S2-4B	Aluminium	6.00	8.00	2963	15.4	19.3	8.5	-	3.3	-	4.9	85.5	-	-	0.70	0.03560	62	73
			1.50	2.00	1482	3.1	9.7	-	9.9	-	2.7	4.6	82.0	-	-	0.80			63
	S2H132M2-4D	Aluminium	8.00	10.67	2927	16.3	26.1	6.7	-	2.1	-	3.1	87.8	-	-	0.86	0.03842	63	73
			2.00	2.67	1468	4.2	13.1	-	6.0	-	2.0	2.8	81.5	-	-	0.88			63
	S2H160M2-4B	Aluminium	12.00	16.00	2974	26.9	38.6	9.7	-	3.5	-	5.1	89.7	-	-	0.75	0.03517	100	61
			3.00	4.00	1485	6.3	19.3	-	8.8	-	3.2	4.3	85.5	-	-	0.78			56
	S2H160L2-4B	Aluminium	16.00	21.33	2963	30.1	51.8	7.9	-	2.4	-	3.5	88.9	-	-	0.87	0.05940	108	62
			4.00	5.33	1479	7.7	25.6	-	6.6	-	2.2	2.9	85.5	-	-	0.84			58
	S2H180L2-4B	Aluminium	25.00	33.33	2975	45.0	80.3	11.1	-	2.2	-	5.5	91.4	-	-	0.88	0.11398	142	70
			6.30	8.40	1485	12.0	40.5	-	9.4	-	2.4	4.7	88.5	-	-	0.85			73
	S2H180L2-4C	Aluminium	20.00	26.67	2957	32.8	64.6	7.2	-	2.0	-	3.2	91.4	-	-	0.96	0.14659	131	70
			5.00	6.67	1479	9.0	32.3	-	6.0	-	1.4	2.8	88.3	-	-	0.91			73
	S2H200L2-4B	Aluminium	33.00	44.00	2973	66.3	106.0	9.7	-	2.1	-	5.3	91.4	-	-	0.80	0.18598	149	70
			8.50	11.33	1484	15.6	54.7	-	8.9	-	2.2	4.3	91.6	-	-	0.86			73
	S2H225M2-4C	Aluminium	37.00	49.33	2979	89.6	119.4	8.6	-	2.9	-	3.8	93.0	-	-	0.70	0.36420	234	71
			9.00	12.00	1489	17.7	58.0	-	9.8	-	3.0	5.0	90.4	-	-	0.86			57
	S2H225M2-4D	Aluminium	46.00	61.33	2973	91.4	147.0	8.2	-	2.3	-	5.4	93.1	-	-	0.88	0.43500	250	69
			12.00	16.00	1485	22.4	77.9	-	7.5	-	2.2	3.7	90.1	-	-	0.89			57
	S2EP250M2-4C	Cast Iron	55.00	73.33	2978	92.0	176.4	9.5	-	2.0	-	4.0	93.3	-	-	0.91	0.36400	506	72
			15.00	20.00	1488	26.0	96.3	-	9.0	-	2.4	4.0	91.0	-	-	0.91			75
	S2EP280M2-4B	Cast Iron	75.00	100.00	2983	139.8	240.3	7.9	-	2.4	-	3.3	93.8	-	-	0.89	1.14800	609	76
			20.00	26.67	1492	39.1	129.2	-	6.9	-	2.0	2.3	90.9	-	-	0.87			68

* According to IEC 60034-2-1
** The sound pressure measurements are taken 1m away from the motor
** Tolerance +3 dBA

ELECTRICAL CHARACTERISTICS AT 50 Hz

	MOTOR TYPE	HOUSING TYPE	RATED VALUES					STARTING VALUES				"Break-down Torque Ratio	EFFICIENCY*			Cosφ	J	Weight [B3]	Sound Pressure Level
			POWER		SPEED	CURRENT	TORQUE	CURRENT		TORQUE			η %						
								IA / IN		MA / MN									
			kW	HP	rpm	A	Nm	λ	Δ	λ	Δ	Mk/ Mn	4/4	3/4	2/4	4/4	kgm2	kg	dBA**
	4-8 pole 1500-750 rpm																		
400 V [YY/Y]	S2H80M4-8C	Aluminium	0.60	0.80	1463	2.1	3.9	4.9	-	2.4	-	6.7	70.7	-	-	0.59	0.00205	9	54
			0.15	0.20	728	1.0	2.0	-	2.6	-	2.2	6.0	48.4	-	-	0.48			58
	S2H80M4-8D	Aluminium	0.80	1.07	1432	1.8	5.3	6.4	-	2.5	-	3.3	78.2	-	-	0.83	0.00216	10	54
			0.20	0.27	703	1.1	2.7	-	3.3	-	2.3	2.9	49.4	-	-	0.62			58
	S2H90S4-8B	Aluminium	1.20	1.60	1430	2.7	8.0	5.6	-	2.1	-	2.7	85.5	-	-	0.82	0.00205	17	55
			0.30	0.40	705	1.2	4.0	-	2.7	-	1.5	2.0	50.6	-	-	0.59			58
	S2H90L4-8C	Aluminium	1.60	2.13	1427	3.5	10.7	5.5	-	2.0	-	2.5	82.8	-	-	0.85	0.00267	20	54
			0.40	0.53	693	1.4	5.5	-	2.8	-	1.5	2.0	57.2	-	-	0.65			57
	S2H100L4-8B	Aluminium	2.00	2.67	1465	5.3	13.1	7.5	-	3.2	-	4.2	83.6	-	-	0.70	0.00521	26	46
			0.50	0.67	723	2.5	6.6	-	3.0	-	2.4	3.0	61.7	-	-	0.50			54
	S2H100L4-8C	Aluminium	2.80	3.73	1438	5.6	18.6	6.2	-	2.0	-	2.6	84.3	-	-	0.87	0.00694	29	46
			0.70	0.93	707	2.1	9.4	-	3.2	-	1.5	2.0	70.0	-	-	0.67			54
	S2H112M4-8B	Aluminium	3.80	5.07	1458	7.8	24.9	7.5	-	2.3	-	3.2	84.5	-	-	0.82	0.01085	33	60
			1.00	1.33	718	3.1	13.3	-	3.9	-	1.5	2.3	70.8	-	-	0.61			55
	S2H132S4-8B	Aluminium	5.00	6.67	1476	10.2	32.5	8.2	-	2.1	-	3.6	85.9	-	-	0.83	0.14136	60	59
			1.30	1.73	739	4.1	16.8	-	4.2	-	1.5	2.6	75.2	-	-	0.58			62
	S2H132M4-8C	Aluminium	7.20	9.60	1479	14.7	46.4	9.2	-	2.1	-	4.2	88.7	-	-	0.81	0.03560	66	63
			1.80	2.40	737	5.7	23.2	-	5.0	-	1.6	3.2	74.0	-	-	0.55			58
	S2H160M4-8B	Aluminium	11.00	14.67	1476	22.5	71.2	6.4	-	2.3	-	2.9	89.8	-	-	0.80	0.03517	77	64
			3.00	4.00	732	9.1	39.3	-	3.3	-	1.7	2.0	80.0	-	-	0.58			52
	S2H160L4-8A	Aluminium	14.00	18.67	1475	28.1	90.7	5.4	-	1.8	-	2.3	90.5	-	-	0.81	0.09940	84	63
			3.50	4.67	734	10.4	45.6	-	3.6	-	1.8	2.1	80.0	-	-	0.58			66
	S2H180M4-8B	Aluminium	17.00	22.67	1484	33.2	109.5	7.8	-	1.9	-	3.2	91.0	-	-	0.83	0.18660	121	70
			4.30	5.73	739	12.2	55.4	-	4.4	-	1.5	2.3	81.9	-	-	0.60			66
	S2H180L4-8A	Aluminium	20.00	26.67	1484	39.0	128.9	6.7	-	2.0	-	2.7	91.4	-	-	0.83	0.18598	128	70
			5.00	6.67	731	13.3	65.6	-	3.1	-	1.4	1.8	81.4	-	-	0.65			67
	S2H200L4-8B	Aluminium	28.00	37.33	1487	57.1	181.2	8.7	-	2.7	-	4.0	92.3	-	-	0.80	0.18660	192	70
			6.50	8.67	737	17.4	84.1	-	4.4	-	1.6	2.3	85.3	-	-	0.62			73
	S2H200L4-8D	Aluminium	30.00	40.00	1489	71.0	193.1	9.2	-	3.1	-	4.3	92.3	-	-	0.75	0.36420	181	70
			8.00	10.67	738	21.8	103.6	-	4.0	-	1.5	2.1	85.3	-	-	0.62			73
	S2H225S4-8A	Aluminium	37.00	49.33	1483	72.6	236.6	7.1	-	2.2	-	3.2	90.2	-	-	0.81	0.36421	201	71
			9.20	12.27	739	23.2	119.4	-	4.9	-	1.8	2.6	86.1	-	-	0.67			74
	S2H225M4-8B	Cast Iron	44.00	58.67	1483	85.8	282.4	7.4	-	2.2	-	3.3	93.1	-	-	0.81	0.36421	219	71
			11.00	14.67	740	27.2	143.0	-	4.6	-	2.0	2.3	86.9	-	-	0.66			74
	S2EP250L4-8D	Cast Iron	55.00	73.33	1488	92.5	352.9	10.2	-	3.3	-	4.5	93.6	-	-	0.92	0.43500	278	72
			14.70	19.60	740	31.9	193.5	-	7.2	-	2.6	3.0	90.6	-	-	0.75			75

* According to IEC 60034-2-1
** The sound pressure measurements are taken 1m away from the motor

** Tolerance +3 dBA
** According to EN 12101-3

F300 SERIES DIMENSIONS

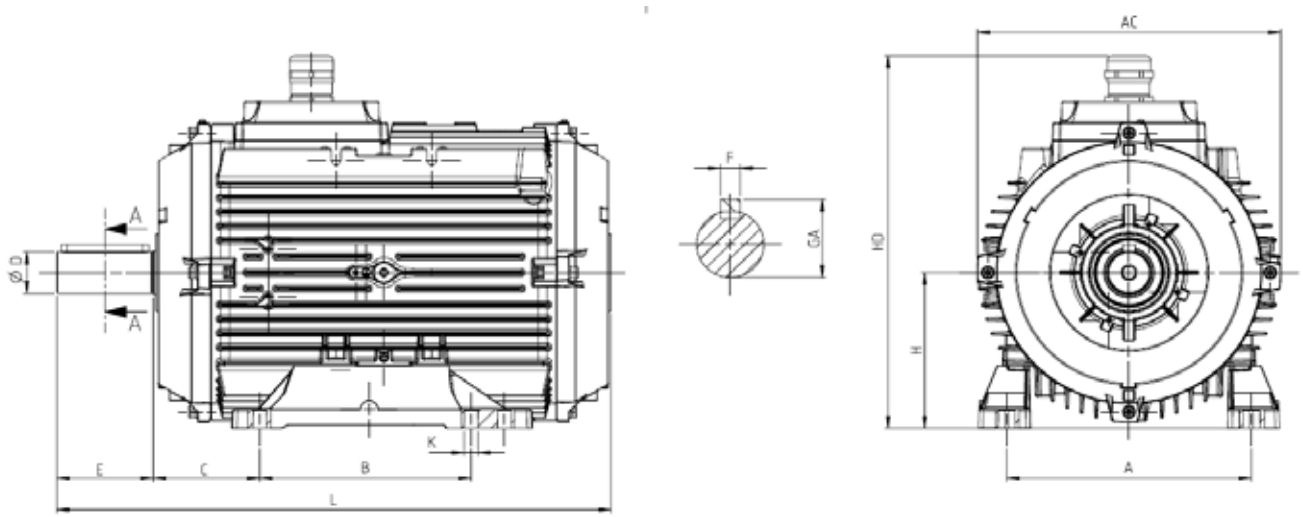

Power [kW]	Number of Poles	Motor Type	Housing Type	Main Dimensions			Foot Mounted Motors						Shaft				Bearing		Seal	
				AC	L	O	B	A	H	HD	K	C	D	E	GA	F	Drive Side	Non drive Side	Drive Side	Non drive side
0.75	2	S2H80M2B	Aluminium	173	238	M20	100	125	80	213	10	50	19	40	21.5	6	6204 ZZ	6204 ZZ	20*30*7	-
1.10	2	S2H80M2C	Aluminium	173	263	M20	100	125	80	213	10	50	19	40	21.5	6	6204 ZZ	6204 ZZ	20*30*7	-
1.50	2	S2H90S2B	Aluminium	189	308	M25	100	140	90	238	10	56	24	50	27	8	6305 ZZ	6205 ZZ	25*40*7	-
2.20	2	S2H90L2C	Aluminium	189	308	M25	100	140	90	238	10	56	24	50	27	8	6305 ZZ	6205 ZZ	25*40*7	-
3.00	2	S2H100L2C	Aluminium	206	348	M25	140	160	100	257	12	63	28	60	31	8	6306 ZZ	6205 ZZ	30*47*7	-
4.00	2	S2HS112M2B	Aluminium	222	348	M25	140	190	112	269	12	56	28	60	31	8	6306 ZZ	6205 ZZ	30*47*7	-
5.50	2	S2HS132S2B	Aluminium	245	382	M25	140	216	132	297	12	89	38	80	41	10	6208 ZZ	6206 ZZ	40*62*10	-
7.50	2	S2HS132S2C	Aluminium	245	382	M25	140	216	132	297	12	89	38	80	41	10	6208 ZZ	6206 ZZ	40*62*10	-
11.00	2	S2H160M2B	Aluminium	345	538	M32	210	254	160	374	14.5	108	42	110	45	12	6309 ZZ	6209 ZZ	45*72*10	-
15.00	2	S2H160M2C	Aluminium	345	538	M32	210	254	160	374	14.5	108	42	110	45	12	6309 ZZ	6209 ZZ	45*72*10	-
18.50	2	S2H160L2B	Aluminium	345	568	M32	210	254	160	374	14.5	108	42	110	45	12	6309 ZZ	6209 ZZ	45*72*10	-
22.00	2	S2H180M2A	Aluminium	346	632	M40	241	279	180	430	15	121.5	48	110	51.5	14	6310 ZZ	6310 ZZ	50*80*10	-
30.00	2	S2H200M2A	Aluminium	346	692	M40	267	318	200	450	18.5	133	55	110	59	16	6312 ZZ	6310 ZZ	60*90*10	-
37.00	2	S2H200L2C	Aluminium	346	692	M40	267	318	200	450	18.5	133	55	110	59	16	6312 ZZ	6310 ZZ	60*90*10	-
45.00	2	S2H225M2A	Aluminium	442	695	M40	286	356	225	500	18.5	149	60	140	64	18	6313 ZZ	6313 ZZ	65*100*13	-
55.00	2	S2EP250M2B	Cast Iron	522	795	M50	311	406	250	578	24	168	65	140	69	18	6316	6316	90*130*10	-
75.00	2	S2EP280M2C	Cast Iron	550	929	M50	368	457	280	612	24	190	75	140	79.5	20	6316	6316	90*130*10	-
90.00	2	S2EP280M2D	Cast Iron	550	929	M50	368	457	280	612	24	190	75	140	79.5	20	6316	6316	90*130*10	-
0.55	4	S2H80M4B	Aluminium	173	263	M20	100	125	80	213	10	50	19	40	21.5	6	6204 ZZ	6204 ZZ	20*30*7	-
0.75	4	S2H80M4C	Aluminium	173	263	M20	100	125	80	213	10	50	19	40	21.5	6	6204 ZZ	6204 ZZ	20*30*7	-
1.10	4	S2H90S4B	Aluminium	189	308	M25	100	140	90	238	10	56	24	50	27	8	6305 ZZ	6205 ZZ	25*40*7	-
1.50	4	S2H90L4C	Aluminium	189	308	M25	100	140	90	238	10	56	24	50	27	8	6305 ZZ	6205 ZZ	25*40*7	-
2.20	4	S2H100L4B	Aluminium	206	348	M25	140	160	100	257	12	63	28	60	31	8	6306 ZZ	6205 ZZ	30*47*7	-
3.00	4	S2H100L4C	Aluminium	206	348	M25	140	160	100	257	12	63	28	60	31	8	6306 ZZ	6205 ZZ	30*47*7	-
4.00	4	S2HS112M4C	Aluminium	222	348	M25	140	190	112	269	12	56	28	60	31	8	6306 ZZ	6205 ZZ	30*47*7	-
5.50	4	S2H132S4A	Aluminium	291	490	M32	140	216	132	323	12	89	38	80	41	10	6208 ZZ	6208 ZZ	40*62*10	-
7.50	4	S2H132M4C	Aluminium	291	490	M32	140	216	132	323	12	89	38	80	41	10	6208 ZZ	6208 ZZ	40*62*10	-
11.00	4	S2H160M4B	Aluminium	345	538	M32	210	254	160	374	14.5	108	42	110	45	12	6309 ZZ	6209 ZZ	45*72*10	-
15.00	4	S2H160L4A	Aluminium	345	568	M32	210	254	160	374	14.5	108	42	110	45	12	6309 ZZ	6209 ZZ	45*72*10	-
18.50	4	S2H180M4A	Aluminium	346	632	M40	241	279	180	430	15	121.5	48	110	51.5	14	6310 ZZ	6310 ZZ	50*80*10	-
22.00	4	S2H180L4B	Aluminium	346	632	M40	241	279	180	430	15	121.5	48	110	51.5	14	6310 ZZ	6310 ZZ	50*80*10	-
30.00	4	S2H200L4C	Aluminium	346	692	M40	267	318	200	450	18.5	133	55	110	59	16	6312 ZZ	6310 ZZ	60*90*10	-
37.00	4	S2H225S4A	Aluminium	442	695	M40	286	356	225	500	18.5	149	60	140	64	18	6313 ZZ	6313 ZZ	65*100*13	-
45.00	4	S2H225M4B	Aluminium	442	695	M40	286	356	225	500	18.5	149	60	140	64	18	6313 ZZ	6313 ZZ	65*100*13	-
55.00	4	S2EP250M4D	Cast Iron	522	795	M50	311	406	250	578	24	168	65	140	69	18	6316	6316	90*130*10	-
75.00	4	S2EP280M4B	Cast Iron	550	929	M50	368	457	280	612	24	190	75	140	79.5	20	6316	6316	90*130*10	-

IE2 SMOKE EXTRACTION MOTORS

Power [kW]	Number of Poles	Motor Type	Housing Type	Main Dimensions			Foot Mounted Motors						Shaft				Bearing		Seal	
				AC	L	O	B	A	H	HD	K	C	D	E	GA	F	Drive Side	Non drive Side	Drive Side	Non drive side
0.20-0.80	2-4	S2H80M2-4A	Aluminium	173	238	M20	100	125	80	213	10	50	19	40	21.5	6	6204 ZZ	6204 ZZ	20*30*7	-
0.25-1.10	2-4	S2H80M2-4B	Aluminium	173	263	M20	100	125	80	213	10	50	19	40	21.5	6	6204 ZZ	6204 ZZ	20*30*7	-
0.37-1.50	2-4	S2H90S2-4B	Aluminium	189	308	M25	100	140	90	238	10	56	24	50	27	8	6305 ZZ	6205 ZZ	25*40*7	-
0.50-2.20	2-4	S2H90L2-4C	Aluminium	189	308	M25	100	140	90	238	10	56	24	50	27	8	6305 ZZ	6205 ZZ	25*40*7	-
0.65-2.50	2-4	S2H100L2-4B	Aluminium	206	348	M25	140	160	100	257	12	63	28	60	31	8	6306 ZZ	6205 ZZ	30*47*7	-
0.80-3.10	2-4	S2H100L2-4D	Aluminium	206	348	M25	140	160	100	257	12	63	28	60	31	8	6306 ZZ	6205 ZZ	30*47*7	-
1.10-4.40	2-4	S2H112M2-4D	Aluminium	228	380	M25	140	190	112	277	12	70	28	60	31	8	6306 ZZ	6205 ZZ	30*47*7	-
1.50-6.00	2-4	S2H132S2-4B	Aluminium	291	490	M32	140	216	132	323	12	89	38	80	41	10	6208 ZZ	6208 ZZ	40*62*10	-
2.00-8.00	2-4	S2H132M2-4D	Aluminium	291	490	M32	140	216	132	323	12	89	38	80	41	10	6208 ZZ	6208 ZZ	40*62*10	-
3.00-12.00	2-4	S2H160M2-4B	Aluminium	345	538	M32	210	254	160	374	14.5	108	42	110	45	12	6309 ZZ	6209 ZZ	45*72*10	-
4.00-16.00	2-4	S2H160L2-4B	Aluminium	345	568	M32	210	254	160	374	14.5	108	42	110	45	12	6309 ZZ	6209 ZZ	45*72*10	-
5.00-20.00	2-4	S2H180L2-4C	Aluminium	346	683	M40	241	279	180	430	15	121.5	48	110	51.5	14	6310 ZZ	6310 ZZ	50*80*10	-
6.30-25.00	2-4	S2H180L2-4B	Aluminium	346	683	M40	241	279	180	430	15	121.5	48	110	51.5	14	6310 ZZ	6310 ZZ	50*80*10	-
8.50-33.00	2-4	S2H200L2-4B	Aluminium	346	692	M40	267	318	200	450	18.5	133	55	110	59	16	6312 ZZ	6310 ZZ	60*90*10	-
9.00-37.00	2-4	S2H225M2-4C	Aluminium	442	695	M40	286	356	225	500	18.5	149	60	140	64	18	6313 ZZ	6313 ZZ	65*100*13	-
12.00-46.00	2-4	S2H225M2-4D	Aluminium	442	695	M40	286	356	225	500	18.5	149	60	140	64	18	6313 ZZ	6313 ZZ	65*100*13	-
15.00-55.00	2-4	S2EP250M2-4C	Cast Iron	522	795	M50	311	406	250	578	24	168	65	140	69	18	6316	6316	90*130*10	-
20.00-75.00	2-4	S2EP280M2-4B	Cast Iron	550	929	M50	368	457	280	612	24	190	75	140	79.5	20	6316	6316	90*130*10	-
0.15-0.60	4-8	S2H80M4-8C	Aluminium	173	263	M20	100	125	80	213	10	50	19	40	21.5	6	6204 ZZ	6204 ZZ	20*30*7	-
0.20-0.80	4-8	S2H80M4-8D	Aluminium	173	263	M20	100	125	80	213	10	50	19	40	21.5	6	6204 ZZ	6204 ZZ	20*30*7	-
0.30-1.20	4-8	S2H90S4-8B	Aluminium	189	308	M25	100	140	90	238	10	56	24	50	27	8	6305 ZZ	6205 ZZ	25*40*7	-
0.40-1.60	4-8	S2H90L4-8C	Aluminium	189	346	M25	100	140	90	238	10	56	24	50	27	8	6305 ZZ	6205 ZZ	25*40*7	-
0.50-2.00	4-8	S2H100L4-8B	Aluminium	206	348	M25	140	160	100	257	12	63	28	60	31	8	6306 ZZ	6205 ZZ	30*47*7	-
0.70-2.80	4-8	S2H100L4-8C	Aluminium	206	348	M25	140	160	100	257	12	63	28	60	31	8	6306 ZZ	6205 ZZ	30*47*7	-
1.00-3.80	4-8	S2H112M4-8B	Aluminium	228	380	M25	140	190	112	277	12	70	28	60	31	8	6306 ZZ	6205 ZZ	30*47*7	-
1.30-5.00	4-8	S2H132S4-8B	Aluminium	291	490	M32	140	216	132	323	12	89	38	80	41	10	6208 ZZ	6208 ZZ	40*62*10	-
1.80-7.20	4-8	S2H132M4-8C	Aluminium	291	490	M32	140	216	132	323	12	89	38	80	41	10	6208 ZZ	6208 ZZ	40*62*10	-
3.50-14.00	4-8	S2H160L4-8A	Aluminium	345	536	M32	210	254	160	374	14.5	108	42	110	45	12	6309 ZZ	6209 ZZ	45*72*10	-
3.00-11.00	4-8	S2H160M4-8B	Aluminium	345	538	M32	210	254	160	374	14.5	108	42	110	45	12	6309 ZZ	6209 ZZ	45*72*10	-
4.30-17.00	4-8	S2H180M4-8B	Aluminium	346	632	M40	241	279	180	430	15	121.5	48	110	51.5	14	6310 ZZ	6310 ZZ	50*80*10	-
5.00-20.00	4-8	S2H180L4-8A	Aluminium	346	632	M40	241	279	180	430	15	121.5	48	110	51.5	14	6310 ZZ	6310 ZZ	50*80*10	-
6.50-28.00	4-8	S2H200L4-8B	Aluminium	346	692	M40	267	318	200	450	18.5	133	55	110	59	16	6312 ZZ	6310 ZZ	60*90*10	-
8.00-30.00	4-8	S2H200L4-8D	Aluminium	346	692	M40	267	318	200	450	18.5	133	55	110	59	16	6312 ZZ	6310 ZZ	60*90*10	-
9.20-37.00	4-8	S2H225S4-8A	Aluminium	442	695	M40	286	356	225	500	18.5	149	60	140	64	18	6313 ZZ	6313 ZZ	65*100*13	-
11.00-44.00	4-8	S2H225M4-8B	Aluminium	442	695	M40	286	356	225	500	18.5	149	60	140	64	18	6313 ZZ	6313 ZZ	65*100*13	-
14.70-55.00	4-8	S2EP250L4-8D	Cast Iron	522	795	M50	311	406	250	578	24	168	65	140	69	18	6316	6316	90*130*10	-

F300 PAD MOUNT SERIES DIMENSIONS

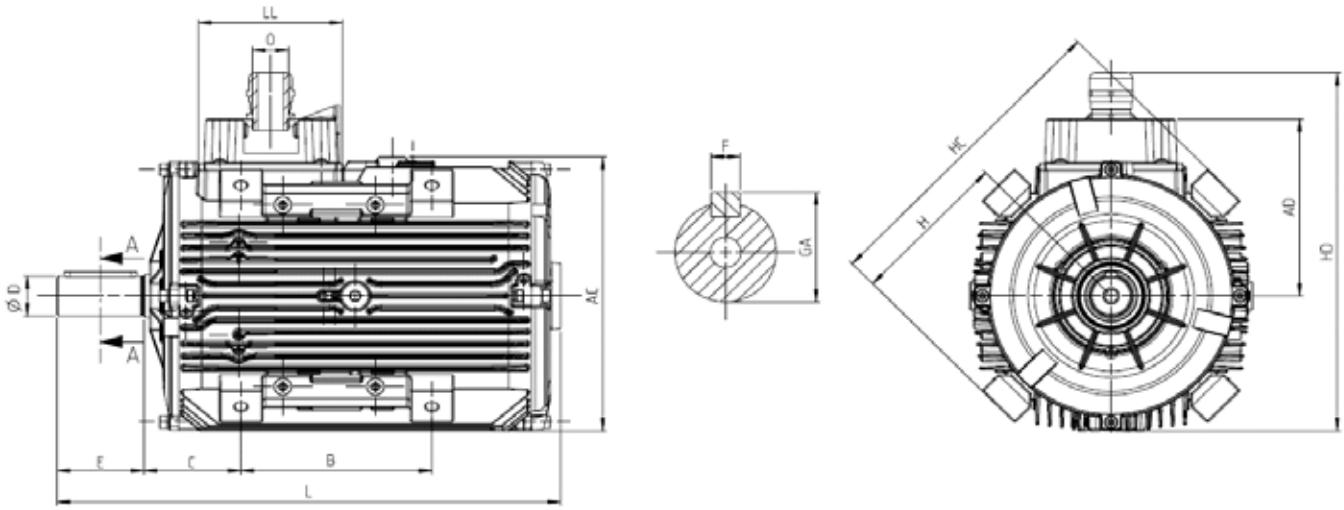

Power [kW]	Number of Poles	Motor Type	Housing Type	Main Dimensions				Foot&Terminal Cover Dimensions				Shaft				Bearing		Seal	
				AC	L	HD	O	LL	AD	H	HC	D	E	GA	F	Drive Side	Non drive Side	Drive Side	Non drive side
0.75	2	S2HPM80M2B	Aluminium	154	238	210	1xM20	85	105	95	189	19	40	21.5	6	6204 ZZ	6204 ZZ	20*30*7	-
1.10	2	S2HPM80M2C	Aluminium	154	263	210	1xM20	85	105	95	189	19	40	21.5	6	6204 ZZ	6204 ZZ	20*30*7	-
1.50	2	S2HPM90S2B	Aluminium	171	308	234	1xM25	100	115	100	199	24	50	27	8	6305 ZZ	6205 ZZ	25*40*7	-
2.20	2	S2HPM90L2C	Aluminium	171	308	234	1xM25	100	115	100	199	24	50	27	8	6305 ZZ	6205 ZZ	25*40*7	-
3.00	2	S2HPM100L2C	Aluminium	193	348	252	1xM25	100	125	111	221	28	60	31	8	6306 ZZ	6205 ZZ	30*47*7	-
0.55	4	S2HPM80M4B	Aluminium	154	263	210	1xM20	85	105	95	189	19	40	21.5	6	6204 ZZ	6204 ZZ	20*30*7	-
0.75	4	S2HPM80M4C	Aluminium	154	238	210	1xM20	85	105	95	191	19	40	21.5	6	6204 ZZ	6204 ZZ	20*30*7	-
1.10	4	S2HPM90S4B	Aluminium	171	308	234	1xM25	100	115	100	199	24	50	27	8	6305 ZZ	6205 ZZ	25*40*7	-
1.50	4	S2HPM90L4C	Aluminium	171	308	234	1xM25	100	115	100	199	24	50	27	8	6305 ZZ	6205 ZZ	25*40*7	-
2.20	4	S2HPM100L4B	Aluminium	193	348	252	1xM25	100	125	111	221	28	60	31	8	6306 ZZ	6205 ZZ	30*47*7	-
3.00	4	S2HPM100L4C	Aluminium	193	348	252	1xM25	100	125	111	221	28	60	31	8	6306 ZZ	6205 ZZ	30*47*7	-
0.20-0.80	2-4	S2HPM80M2-4A	Aluminium	154	238	210	1xM20	85	105	95	189	19	40	21.5	6	6204 ZZ	6204 ZZ	20*30*7	-
0.25-1.10	2-4	S2HPM80M2-4B	Aluminium	154	263	210	1xM20	85	105	95	189	19	40	21.5	6	6204 ZZ	6204 ZZ	20*30*7	-
0.37-1.50	2-4	S2HPM90S2-4B	Aluminium	172	308	234	1xM25	100	115	100	199	24	50	27	8	6305 ZZ	6205 ZZ	25*40*7	-
0.50-2.20	2-4	S2HPM90L2-4C	Aluminium	172	308	234	1xM25	100	115	100	199	24	50	27	8	6305 ZZ	6205 ZZ	25*40*7	-
0.65-2.50	2-4	S2HPM100L2-4B	Aluminium	193	348	252	1xM25	100	125	111	221	28	60	31	8	6306 ZZ	6205 ZZ	30*47*7	-
0.80-3.10	2-4	S2HPM100L2-4D	Aluminium	193	348	252	1xM25	100	125	111	221	28	60	31	8	6306 ZZ	6205 ZZ	30*47*7	-
0.15-0.60	4-8	S2HPM80M4-8C	Aluminium	154	263	210	1xM20	85	105	95	189	19	40	21.5	6	6204 ZZ	6204 ZZ	20*30*7	-
0.20-0.80	4-8	S2HPM80M4-8D	Aluminium	154	263	210	1xM20	85	105	95	189	19	40	21.5	6	6204 ZZ	6204 ZZ	20*30*7	-
0.30-1.20	4-8	S2HPM90S4-8B	Aluminium	172	308	234	1xM25	100	115	100	199	24	50	27	8	6305 ZZ	6205 ZZ	25*40*7	-
0.40-1.60	4-8	S2HPM90L4-8C	Aluminium	172	346	234	1xM25	100	115	100	199	24	50	27	8	6305 ZZ	6205 ZZ	25*40*7	-
0.55-2.20	4-8	S2HPM100L4-8B	Aluminium	193	348	252	1xM25	100	125	111	221	28	60	31	8	6306 ZZ	6205 ZZ	30*47*7	-
0.70-2.80	4-8	S2HPM100L4-8C	Aluminium	193	348	252	1xM25	100	125	111	221	28	60	31	8	6306 ZZ	6205 ZZ	30*47*7	-

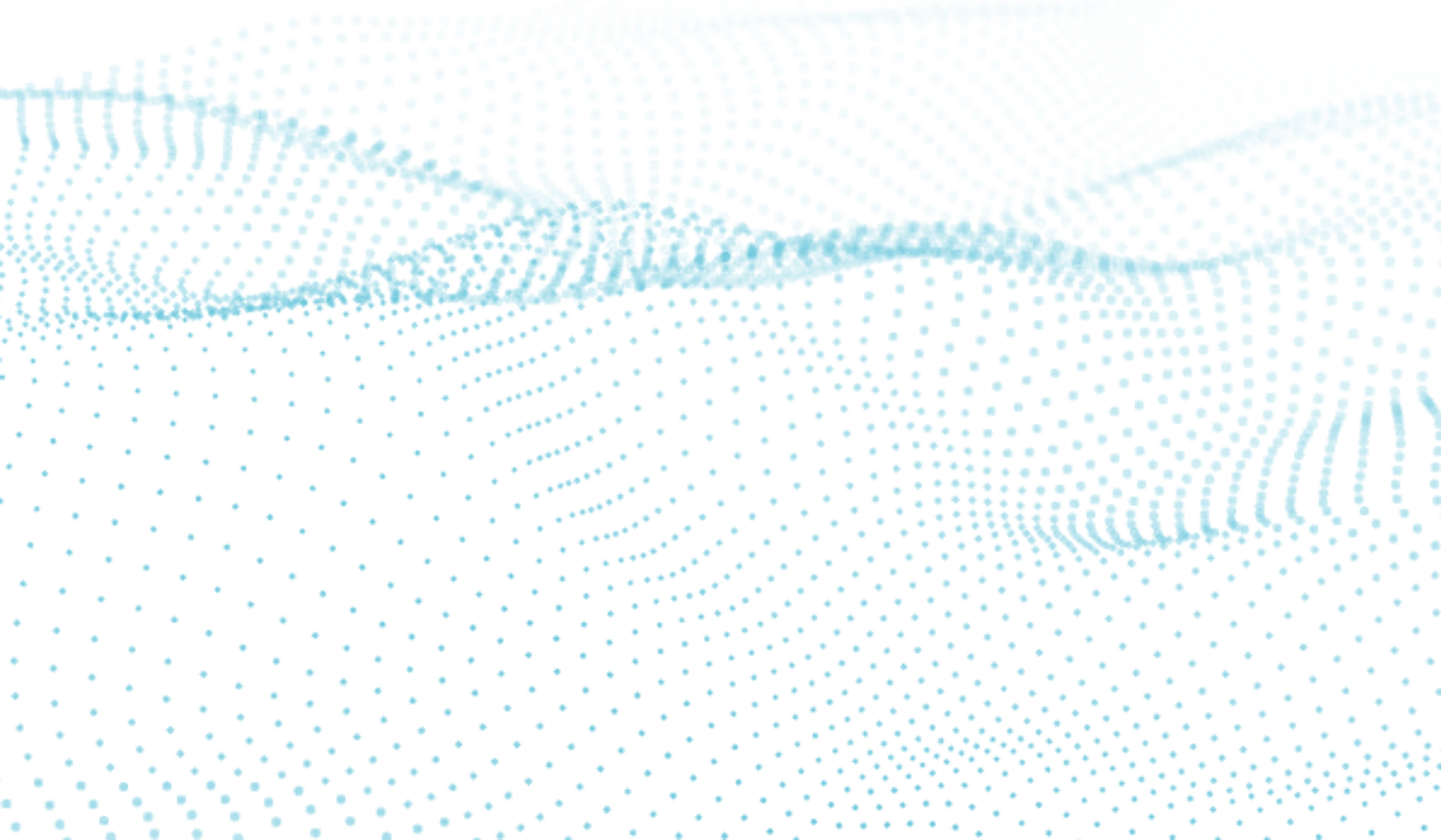

BRAKE MOTORS

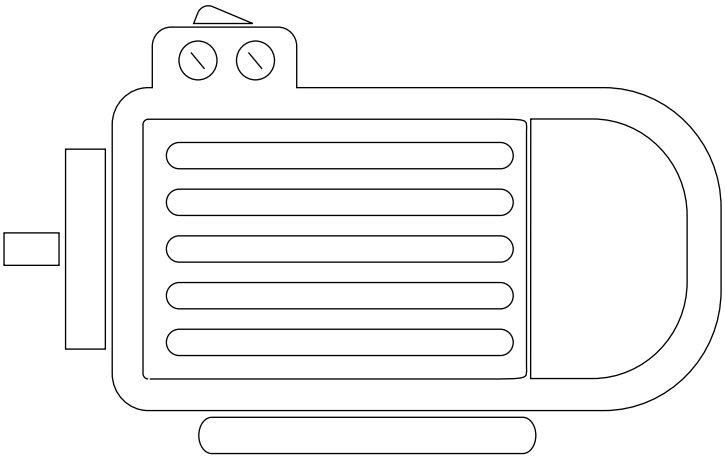

TECHNICAL DOCUMENTATION

Mechanical and electrical properties are same as standard type motors. Non-drive endshields are made of cast-iron

Brake Specifications

DC electromagnetic brakes with a safety-design are used in brake motors. Different brake voltages are available upon request.

Working Principle

When the supply fails, the springs make the armature plate press the brake disk and then motor automatically starts braking. When the brake being supplied, electromagnet pulls the armature plate then both the brake disk and motor shaft are set to free.

Brake Disk

Asbestos-free brake material is used with long-life friction rings.

Type	Distance between Adjusting-ring and Electromagnet: "A" (in mm)									
	9	8	7	6	5	4	3	2	1	"A"
Q3H80	-	-	-	-	0,1	3,2	5,4	7,6	9,8	12
Q3H90	-	-	-	-	-	1,6	5,2	8,8	12,4	16
Q3H100	3,5	7,0	14,5	14,0	17,5	21,0	24,5	28,0	31,5	35
Q3H112	-	4,0	11,0	18,0	25,0	32,0	39,0	46,0	53,0	60
	Breaking Torque Value (Kgm)									Max. Torque (Kgm)

Braking Torque

Braking torque can be adjusted by ring. In the table shown below, you will find the distance "A" in order to obtain the braking torque requested. The variation in the wear of friction material which is subject to change in braking torque is given below.

Switching Times

Normal switching times are given in the table below. These values are subject to change according to load characteristics.

Type	Normal switch-off time ms	Normal switch-on time ms	Fast switch-off time ms
Q3H80	15	55	30
Q3H90	15	65	40
Q3H100	20	75	45
Q3H112	25	180	85

Special Constructions

The following special construction class features are possible upon request;

- Special shaft end
- Special flanges
- Different type bearings
- Fixed bearings
- IP55 protection class
- Different voltages an frequencies
- AC type brake

Air Gap

Ideal air-gap values are given in the table below. The maximum acceptable air-gap value is 0,7 mm. If this value is exceeded, the brake's performance will change and air gap must be adjusted again.

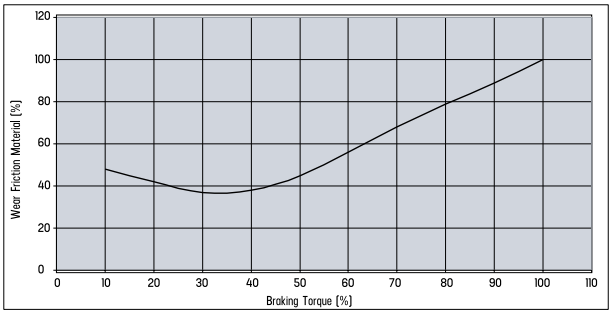

Type	Q3H80	Q3H90	Q3H100	Q3H112
Ideal Air-gap (mm)	0,2	0,2	0,3	0,3

Rectifier Bridge

Normal Type (AS) half-wave rectifier is used as standard in motors. By using fast type (ASR) rectifier, it is possible to get fast switch on times which is shown on the table.

ELECTRICAL CHARACTERISTICS AT 50 Hz

	MOTOR TYPE	HOUSING TYPE	RATED VALUES					STARTING VALUES				Breakdown Torque Ratio	EFFICIENCY **	Cosφ	Brake Max Torque	J	Weight (B3)	Sound Pressure Level dBA **
			POWER		SPEED	CURRENT	TORQUE	CURRENT		TORQUE								
								I_A / I_N		M_A / M_N			η %				kg	
			kW	HP	rpm	A	Nm	λ	Δ	λ	Δ	Mk/ Mn	4/4	4/4	kgm²	kgm²		
	2 pole 3000 rpm																	
230/400V	Q3H80M2A70	Aluminium	0.75	1	2890	1.6	2.5	8.3	–	3.7	–	4.2	80.7	0.85	12	0.0014	13	57
230/400V	Q3H80M2B70	Aluminium	1.1	1.5	2890	2.3	3.6	9.1	–	3.9	–	4.3	82.7	0.85	12	0.0017	13	57
230/400V	Q3H90S2A70	Aluminium	1.5	2	2930	3.0	4.9	11.3	–	3.8	–	5.0	84.2	0.85	16	0.0023	17	62
230/400V	Q3H90L2A70	Aluminium	2.2	3	2917	4.3	7.2	9.2	–	3.1	–	4.9	85.9	0.87	16	0.0028	19	62
230/400V	Q3H100L2A70	Aluminium	3	4	2925	5.5	9.8	11	–	3.9	–	4.7	87.1	0.90	35	0.0052	19	66
400/690V	Q3H112M2A70	Aluminium	4	5.5	2918	7.3	13.1	3.7	11.1	1.1	3.4	4.5	88.1	0.89	60	0.0056	32	68
	4 pole 1500 rpm																	
230/400V	Q3H80M4A70	Aluminium	0.55	3/4	1435	1.3	3.6	6.4	–	2.3	–	3.2	77.1	0.76	12	0.00175	10	49
230/400V	Q3H80M4B70	Aluminium	0.75	1	1445	1.7	5.0	6.7	–	2.8	–	3.4	82.5	0.77	12	0.00261	13	52
230/400V	Q3H90S4A70	Aluminium	1.1	1.5	1445	2.5	7.3	7.2	–	3.2	–	4.0	84.1	0.78	16	0.0043	19	54
230/400V	Q3H90L4A70	Aluminium	1.5	2	1449	3.5	9.9	8.1	–	3.6	–	4.2	85.3	0.76	16	0.00526	20	54
230/400V	Q3H100L4A70	Aluminium	2.2	3	1445	4.5	14.4	8.9	–	3.5	–	4.3	86.7	0.83	35	0.0081	26	55
230/400V	Q3H100L4B70	Aluminium	3	4	1446	6.2	19.9	8.4	–	3.3	–	3.8	87.7	0.81	35	0.01059	31	56
400/690V	Q3H112M4B70	Aluminium	4	5.5	1452	8.2	26.5	9.1	3.0	1.1	3.3	4.1	88.6	0.80	60	0.01383	31	56
	6 pole 1000 rpm																	
230/400V	Q3H80M6A70	Aluminium	0.37	1/2	953	1.2	3.7	4.4	–	2.1	–	2.8	67.6	0.65	12	0.00261	10	52
230/400V	Q3H80M6B70	Aluminium	0.55	3/4	942	1.6	5.6	4.1	–	1.8	–	2.3	73.1	0.70	12	0.00328	12	52
230/400V	Q3H90S6A70	Aluminium	0.75	1	950	2.1	7.6	4.9	–	2.5	–	3.0	78.9	0.67	16	0.00460	18	53
230/400V	Q3H90L6B70	Aluminium	1.1	1.5	950	3.0	11.1	4.5	–	2.6	–	2.9	81.0	0.67	16	0.00528	20	53
230/400V	Q3H100L6A70	Aluminium	1.5	2	960	4.1	14.9	4.8	–	2.6	–	3.0	82.5	0.65	35	0.01059	26	55
230/400V	Q3H112M6A70	Aluminium	2.2	3	957	5.2	22.0	4.9	–	2.7	–	3.0	84.3	0.71	60	0.01383	32	57

DIMENSION B3

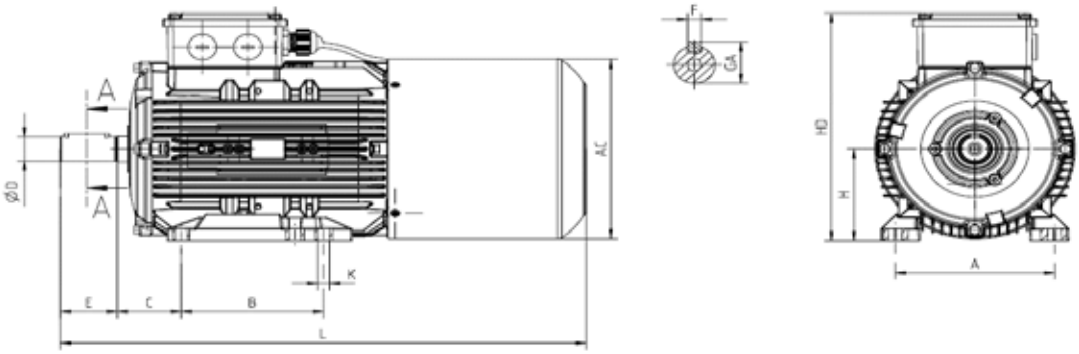

Power [kW]	Number of Poles	Motor Type	Housing Type	Main Dimensions			Foot Mounted Motors						Shaft				Bearing		Seal	
				AC	L	O	B	A	H	HD	K	C	D	E	GA	F	Drive Side	Non drive Side	Drive Side	Non drive side
0.37	6	Q3H80M6A70	Aluminium	158	340	1xM20	100	125	80	216	10	50	19	40	21.5	6	6204-ZZ	6204-ZZ	20*30*7	20*30*7
0.55	4	Q3H80M4A70	Aluminium	158	340	1xM20	100	125	80	216	10	50	19	40	21.5	6	6204-ZZ	6204-ZZ	20*30*7	20*30*7
0.55	6	Q3H80M6B70	Aluminium	158	365	1xM20	100	125	80	216	10	50	19	40	21.5	6	6204-ZZ	6204-ZZ	20*30*7	20*30*7
0.75	2	Q3H80M2A70	Aluminium	158	340	1xM20	100	125	80	216	10	50	19	40	21.5	6	6204-ZZ	6204-ZZ	20*30*7	20*30*7
0.75	4	Q3H80M4B70	Aluminium	158	340	1xM20	100	125	80	216	10	50	19	40	21.5	6	6204-ZZ	6204-ZZ	20*30*7	20*30*7
0.75	6	Q3H90S6A70	Aluminium	176	420	1xM25	100-125	140	90	223	10	56	24	50	27	8	6305-ZZ	6205-ZZ	25*40*7	25*40*7
1.1	2	Q3H80M2B70	Aluminium	158	340	1xM20	100	125	80	216	10	50	19	40	21.5	6	6204-ZZ	6204-ZZ	20*30*7	20*30*7
1.1	4	Q3H90S4A70	Aluminium	176	460	1xM25	100-125	140	90	223	10	56	24	50	27	8	6305-ZZ	6205-ZZ	25*40*7	25*40*7
1.1	6	Q3H90L6B70	Aluminium	176	420	1xM25	100-125	140	90	223	10	56	24	50	27	8	6305-ZZ	6205-ZZ	25*40*7	25*40*7
1.5	2	Q3H90S2A70	Aluminium	176	420	1xM25	100-125	140	90	223	10	56	24	50	27	8	6305-ZZ	6205-ZZ	25*40*7	25*40*7
1.5	4	Q3H90L4A70	Aluminium	176	460	1xM25	100-125	140	90	223	10	56	24	50	27	8	6305-ZZ	6205-ZZ	25*40*7	25*40*7
1.5	6	Q3H100L6A70	Aluminium	196	482	1xM25	140	160	100	243	12	63	28	60	31	8	6306-ZZ	6205-ZZ	30*47*7	25*40*7
2.2	2	Q3H90L2A70	Aluminium	176	420	1xM25	100-125	140	90	223	10	56	24	50	27	8	6305-ZZ	6205-ZZ	25*40*7	25*40*7
2.2	4	Q3H100L4A70	Aluminium	196	482	1xM25	140	160	100	243	12	63	28	60	31	8	6306-ZZ	6205-ZZ	30*47*7	25*40*7
2.2	6	Q3H112M6A70	Aluminium	219	497	1xM25	140	190	112	265	12	70	28	60	31	8	6306-ZZ	6206-ZZ	30*47*7	30*47*7
3	2	Q3H100L2A70	Aluminium	196	482	1xM25	140	160	100	243	12	63	28	60	31	8	6306-ZZ	6205-ZZ	30*47*7	25*40*7
3	4	Q3H100L4B70	Aluminium	196	482	1xM25	140	160	100	243	12	63	28	60	31	8	6306-ZZ	6205-ZZ	30*47*7	25*40*7
4	2	Q3H112M2A70	Aluminium	219	497	1xM25	140	190	112	265	12	70	28	60	31	8	6306-ZZ	6206-ZZ	30*47*7	30*47*7
4	4	Q3H112M4B70	Aluminium	219	497	1xM25	140	190	112	265	12	70	28	60	31	8	6306-ZZ	6206-ZZ	30*47*7	30*47*7

Dimensions are in mm.
(1) Tolerance DIN EN 50347 “j6” up to f28mm.,”k6” above f28mm.
(2) According to DIN 6885
(3) Tolerance DIN EN 50347 “j6”
(4) Lifting bolt is mounted from frame size 112 on

DIMENSION B5 - B35

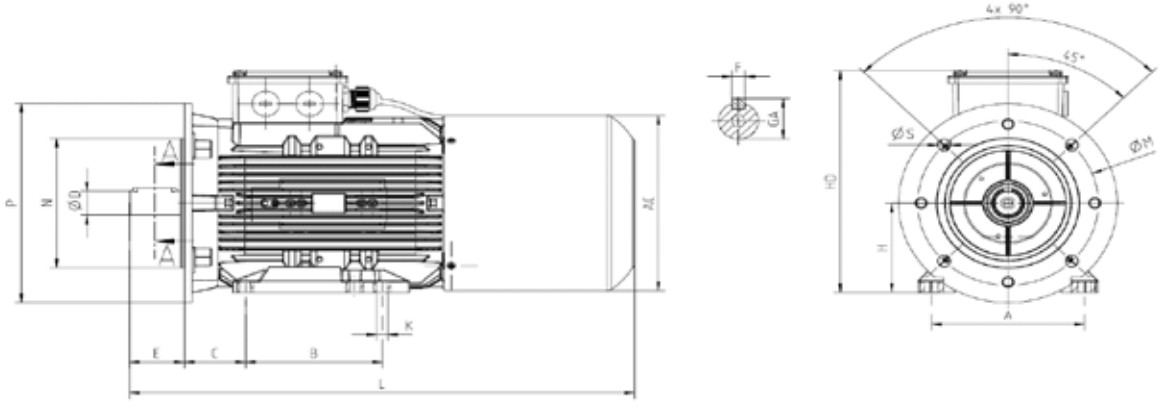

				Main Dimensions			Foot Mounted Motors						Shaft				Bearing		Seal		Flange (FA) (B5)				
Power (kW)	Number of Poles	Motor Type	Housing Type	AC	L	O	B	A	H	HD	K	C	D[1]	E	GA	F[2]	Drive Side	Non drive Side	Drive Side	Non drive Side	P	N[3]	M	R	S
0.37	6	Q3H80M6A70	Aluminium	158	340	1xM20	100	125	80	216	10	50	19	40	21,5	6	6204-ZZ	6204-ZZ	20*30*7	20*30*7	200	130	165	-	12
0.55	4	Q3H80M4A70	Aluminium	158	340	1xM20	100	125	80	216	10	50	19	40	21,5	6	6204-ZZ	6204-ZZ	20*30*7	20*30*7	200	130	165	-	12
0.55	6	Q3H80M6B70	Aluminium	158	365	1xM20	100	125	80	216	10	50	19	40	21,5	6	6204-ZZ	6204-ZZ	20*30*7	20*30*7	200	130	165	-	13
0.75	2	Q3H80M2A70	Aluminium	158	340	1xM20	100	125	80	216	10	50	19	40	21,5	6	6204-ZZ	6204-ZZ	20*30*7	20*30*7	200	130	165	-	12
0.75	4	Q3H80M4B70	Aluminium	158	340	1xM20	100	125	80	216	10	50	19	40	21,5	6	6204-ZZ	6204-ZZ	20*30*7	20*30*7	200	130	165	-	13
0.75	6	Q3H90S6A70	Aluminium	176	420	1xM25	100-125	140	90	223	10	56	24	50	27	8	6305-ZZ	6205-ZZ	25*40*7	25*40*7	200	130	165	-	14
1.1	2	Q3H80M2B70	Aluminium	158	340	1xM20	100	125	80	216	10	50	19	40	21,5	6	6204-ZZ	6204-ZZ	20*30*7	20*30*7	200	130	165	-	12
1.1	4	Q3H90S4A70	Aluminium	176	460	1xM25	100-125	140	90	223	10	56	24	50	27	8	6305-ZZ	6205-ZZ	25*40*7	25*40*7	200	130	165	-	14
1.1	6	Q3H90L6B70	Aluminium	176	420	1xM25	100-125	140	90	223	10	56	24	50	27	8	6305-ZZ	6205-ZZ	25*40*7	25*40*7	200	130	165	-	15
1.5	2	Q3H90S2A70	Aluminium	176	420	1xM25	100-125	140	90	223	10	56	24	50	27	8	6305-ZZ	6205-ZZ	25*40*7	25*40*7	200	130	165	-	12
1.5	4	Q3H90L4A70	Aluminium	176	460	1xM25	100-125	140	90	223	10	56	24	50	27	8	6305-ZZ	6205-ZZ	25*40*7	25*40*7	200	130	165	-	15
1.5	6	Q3H100L6A70	Aluminium	196	482	1xM25	140	160	100	243	12	63	28	60	31	8	6306-ZZ	6205-ZZ	30*47*7	25*40*7	250	180	215	-	14.5
2.2	2	Q3H90L2A70	Aluminium	176	420	1xM25	100-125	140	90	223	10	56	24	50	27	8	6305-ZZ	6205-ZZ	25*40*7	25*40*7	200	130	165	-	12
2.2	4	Q3H100L4A70	Aluminium	196	482	1xM25	140	160	100	243	12	63	28	60	31	8	6306-ZZ	6205-ZZ	30*47*7	25*40*7	250	180	215	-	14.5
2.2	6	Q3H112M6A70	Aluminium	219	497	1xM25	140	190	112	265	12	70	28	60	31	8	6306-ZZ	6206-ZZ	30*47*7	30*47*7	250	180	215	-	15.5
3	2	Q3H100L2A70	Aluminium	196	482	1xM25	140	160	100	243	12	63	28	60	31	8	6306-ZZ	6205-ZZ	30*47*7	25*40*7	250	180	215	-	14.5
3	4	Q3H100L4B70	Aluminium	196	482	1xM25	140	160	100	243	12	63	28	60	31	8	6306-ZZ	6205-ZZ	30*47*7	25*40*7	250	180	215	-	15.5
4	2	Q3H112M2A70	Aluminium	219	497	1xM25	140	190	112	265	12	70	28	60	31	8	6306-ZZ	6206-ZZ	30*47*7	30*47*7	250	180	215	-	15.5
4	4	Q3H112M4B70	Aluminium	219	497	1xM25	140	190	112	265	12	70	28	60	31	8	6306-ZZ	6206-ZZ	30*47*7	30*47*7	250	180	215	-	16.5

Dimensions are in mm.
(1) Tolerance DIN EN 50347 “j6” up to f28mm.,”k6” above f28mm.
(2) According to DIN 6885
(3) Tolerance DIN EN 50347 “j6”
(4) Lifting bolt is mounted from frame size 112 on

DIMENSION B14a - 34a

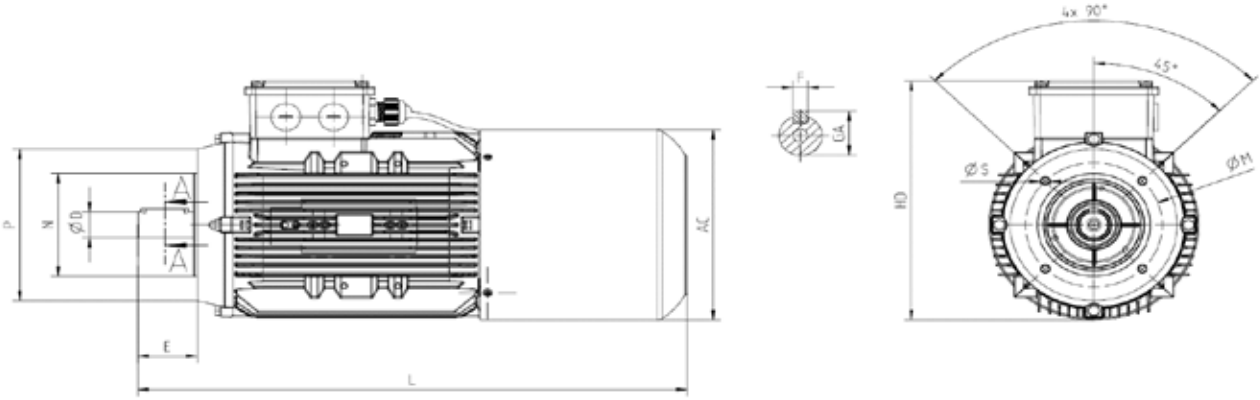

				Main Dimensions			Foot Mounted Motors						Shaft				Bearing		Seal		Flange (FA) (B5)				
Power (kW)	Number of Poles	Motor Type	Housing Type	AC	L	O	B	A	H	HD	K	C	D[1]	E	GA	F[2]	Drive Side	Non drive Side	Drive Side	Non drive Side	P	N[3]	M	R	S
0.37	6	Q3H80M6A70	Aluminium	158	340	1xM20	100	125	80	216	10	50	19	40	21.5	6	6204-ZZ	6204-ZZ	20*30*7	20*30*7	120	80	100	-	M6
0.55	4	Q3H80M4A70	Aluminium	158	340	1xM20	100	125	80	216	10	50	19	40	21.5	6	6204-ZZ	6204-ZZ	20*30*7	20*30*7	120	80	100	-	M6
0.55	6	Q3H80M6B70	Aluminium	158	365	1xM20	100	125	80	216	10	50	19	40	21.5	6	6204-ZZ	6204-ZZ	20*30*7	20*30*7	120	80	100	-	M6
0.75	2	Q3H80M2A70	Aluminium	158	340	1xM20	100	125	80	216	10	50	19	40	21.5	6	6204-ZZ	6204-ZZ	20*30*7	20*30*7	120	80	100	-	M6
0.75	4	Q3H80M4B70	Aluminium	158	340	1xM20	100	125	80	216	10	50	19	40	21.5	6	6204-ZZ	6204-ZZ	20*30*7	20*30*7	120	80	100	-	M6
0.75	6	Q3H90S6A70	Aluminium	176	420	1xM25	100-125	140	90	223	10	56	24	50	27	8	6305-ZZ	6205-ZZ	25*40*7	25*40*7	140	95	115	-	M8
1.1	2	Q3H80M2B70	Aluminium	158	340	1xM20	100	125	80	216	10	50	19	40	21.5	6	6204-ZZ	6204-ZZ	20*30*7	20*30*7	120	80	100	-	M6
1.1	4	Q3H90S4A70	Aluminium	176	460	1xM25	100-125	140	90	223	10	56	24	50	27	8	6305-ZZ	6205-ZZ	25*40*7	25*40*7	140	95	115	-	M8
1.1	6	Q3H90L6B70	Aluminium	176	420	1xM25	100-125	140	90	223	10	56	24	50	27	8	6305-ZZ	6205-ZZ	25*40*7	25*40*7	140	95	115	-	M8
1.5	2	Q3H90S2A70	Aluminium	176	420	1xM25	100-125	140	90	223	10	56	24	50	27	8	6305-ZZ	6205-ZZ	25*40*7	25*40*7	140	95	115	-	M8
1.5	4	Q3H90L4A70	Aluminium	176	460	1xM25	100-125	140	90	223	10	56	24	50	27	8	6305-ZZ	6205-ZZ	25*40*7	25*40*7	140	95	115	-	M8
1.5	6	Q3H100L6A70	Aluminium	196	482	1xM25	140	160	100	243	12	63	28	60	31	8	6306-ZZ	6205-ZZ	30*47*7	25*40*7	160	110	130	-	M8
2.2	2	Q3H90L2A70	Aluminium	176	420	1xM25	100-125	140	90	223	10	56	24	50	27	8	6305-ZZ	6205-ZZ	25*40*7	25*40*7	140	95	115	-	M8
2.2	4	Q3H100L4A70	Aluminium	196	482	1xM25	140	160	100	243	12	63	28	60	31	8	6306-ZZ	6205-ZZ	30*47*7	25*40*7	160	110	130	-	M8
2.2	6	Q3H112M6A70	Aluminium	219	497	1xM25	140	190	112	265	12	70	28	60	31	8	6306-ZZ	6206-ZZ	30*47*7	30*47*7	160	110	130	-	M8
3	2	Q3H100L2A70	Aluminium	196	482	1xM25	140	160	100	243	12	63	28	60	31	8	6306-ZZ	6205-ZZ	30*47*7	25*40*7	160	110	130	-	M8
3	4	Q3H100L4B70	Aluminium	196	482	1xM25	140	160	100	243	12	63	28	60	31	8	6306-ZZ	6205-ZZ	30*47*7	25*40*7	160	110	130	-	M8
4	2	Q3H112M2A70	Aluminium	219	497	1xM25	140	190	112	265	12	70	28	60	31	8	6306-ZZ	6206-ZZ	30*47*7	30*47*7	160	110	130	-	M8
4	4	Q3H112M4B70	Aluminium	219	497	1xM25	140	190	112	265	12	70	28	60	31	8	6306-ZZ	6206-ZZ	30*47*7	30*47*7	160	110	130	-	M8

DIMENSION B14b - 34b

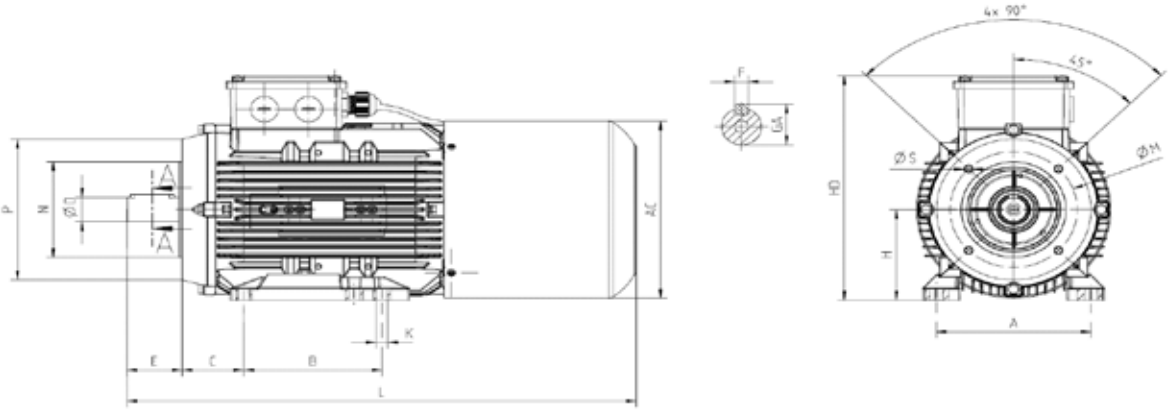

				Main Dimensions			Foot Mounted Motors						Shaft				Bearing		Seal		Flange (FA) (B5)				
Power (kW)	Number of Poles	Motor Type	Housing Type	AC	L	O	B	A	H	HD	K	C	D[1]	E	GA	F[2]	Drive Side	Non drive Side	Drive Side	Non drive Side	P	N[3]	M	R	S
0.37	6	Q3H80M6A70	Aluminium	158	340	1xM20	100	125	80	216	10	50	19	40	21,5	6	6204-ZZ	6204-ZZ	20*30*7	20*30*7	160	110	130	-	M8
0.55	4	Q3H80M4A70	Aluminium	158	340	1xM20	100	125	80	216	10	50	19	40	21,5	6	6204-ZZ	6204-ZZ	20*30*7	20*30*7	160	110	130	-	M8
0.55	6	Q3H80M6B70	Aluminium	158	365	1xM20	100	125	80	216	10	50	19	40	21,5	6	6204-ZZ	6204-ZZ	20*30*7	20*30*7	160	110	130	-	M8
0.75	2	Q3H80M2A70	Aluminium	158	340	1xM20	100	125	80	216	10	50	19	40	21,5	6	6204-ZZ	6204-ZZ	20*30*7	20*30*7	160	110	130	-	M8
0.75	4	Q3H80M4B70	Aluminium	158	340	1xM20	100	125	80	216	10	50	19	40	21,5	6	6204-ZZ	6204-ZZ	20*30*7	20*30*7	160	110	130	-	M8
0.75	6	Q3H90S6A70	Aluminium	176	420	1xM25	100-125	140	90	223	10	56	24	50	27	8	6305-ZZ	6205-ZZ	25*40*7	25*40*7	160	110	130	-	M8
1.1	2	Q3H80M2B70	Aluminium	158	340	1xM20	100	125	80	216	10	50	19	40	21,5	6	6204-ZZ	6204-ZZ	20*30*7	20*30*7	160	110	130	-	M8
1.1	4	Q3H90S4A70	Aluminium	176	460	1xM25	100-125	140	90	223	10	56	24	50	27	8	6305-ZZ	6205-ZZ	25*40*7	25*40*7	160	110	130	-	M8
1.1	6	Q3H90L6B70	Aluminium	176	420	1xM25	100-125	140	90	223	10	56	24	50	27	8	6305-ZZ	6205-ZZ	25*40*7	25*40*7	160	110	130	-	M8
1.5	2	Q3H90S2A70	Aluminium	176	420	1xM25	100-125	140	90	223	10	56	24	50	27	8	6305-ZZ	6205-ZZ	25*40*7	25*40*7	160	110	130	-	M8
1.5	4	Q3H90L4A70	Aluminium	176	460	1xM25	100-125	140	90	223	10	56	24	50	27	8	6305-ZZ	6205-ZZ	25*40*7	25*40*7	160	110	130	-	M8
1.5	6	Q3H100L6A70	Aluminium	196	482	1xM25	140	160	100	243	12	63	28	60	31	8	6306-ZZ	6205-ZZ	30*47*7	25*40*7	200	130	165	-	M10
2.2	2	Q3H90L2A70	Aluminium	176	420	1xM25	100-125	140	90	223	10	56	24	50	27	8	6305-ZZ	6205-ZZ	25*40*7	25*40*7	160	110	130	-	M8
2.2	4	Q3H100L4A70	Aluminium	196	482	1xM25	140	160	100	243	12	63	28	60	31	8	6306-ZZ	6205-ZZ	30*47*7	25*40*7	200	130	165	-	M10
2.2	6	Q3H112M6A70	Aluminium	219	497	1xM25	140	190	112	265	12	70	28	60	31	8	6306-ZZ	6206-ZZ	30*47*7	30*47*7	200	130	165	-	M10
3	2	Q3H100L2A70	Aluminium	196	482	1xM25	140	160	100	243	12	63	28	60	31	8	6306-ZZ	6205-ZZ	30*47*7	25*40*7	200	130	165	-	M10
3	4	Q3H100L4B70	Aluminium	196	482	1xM25	140	160	100	243	12	63	28	60	31	8	6306-ZZ	6205-ZZ	30*47*7	25*40*7	200	130	165	-	M10
4	2	Q3H112M2A70	Aluminium	219	497	1xM25	140	190	112	265	12	70	28	60	31	8	6306-ZZ	6206-ZZ	30*47*7	30*47*7	200	130	165	-	M10
4	4	Q3H112M4B70	Aluminium	219	497	1xM25	140	190	112	265	12	70	28	60	31	8	6306-ZZ	6206-ZZ	30*47*7	30*47*7	200	130	165	-	M10

BRAKE KIT

Flexibility - Our IEC standard motors can easily be converted into a brake motor within minutes using our modular brake kit

BRAKE KIT NOMENCLATURE

Default (2 digit)	Frame (2 digit)		NDE End-Shield Type (2 digit)		Brand, rectifier (2 digit)		Connection Diameter (3)		Brake Gear (1 digit)		Brake Voltage (3 digit)		Other (1 digit)		Fan Cover Color (1 digit)	
FK	H80	08	Normal, without friction plate	N0	Without Brake	00	72	072	Small	S	Without Brake	000	Without dust seal, Without hand-release	X	Without Paint	
	H90	09	Deep, without friction plate	L0	EMF, half wave	AA	90	090	Normal	N	24V DC	024	With dust seal, without hand-release	A	RAL 6011	W
	HS90	08	Normal, without friction plate, fixed NDE	N1	EMF, full wave	AB	112	112	Large	L	100V DC	100	Without dust seal, With hand-release	B	RAL 7015	H
	H100	10	Deep, without friction plate, fixed NDE	L1	EMF, half wave, microswitch	AC	132	132			180V DC	180	With dust seal, With hand-release	C	RAL 7030	L
	HS100	09	Normal, with friction plate	N2	EMF, full wave, microswitch	AD	145	145			220V AC	220			RAL 7031	O
	H112	11	Deep, with friction plate	L2	Temporiti, 1	BA	170	170			230V AC	230				
	HS112	10	Normal, with friction plate, fixed NDE	N3	Temporiti, 2	BB	196	196			380V AC	380				
	H132	13	Deep, with friction plate, fixed NDE	L3	Temporiti, 3	BC					400V AC	400				
	HS132	11			Temporiti, 4	BD										
	H160	16			Intorq	CA										
	HS160	13			Precima	DA										
	H180	18			Dereli	EA										
	H200	20														

Brake Connection Diameter	Gear Size	Gear Hub Dimension		
090	N	20x20	090N	20x20
112	S	15x20	112S	15x20
112	N	20x20	112N	20x20
132	S	20x20	132S	20x20
132	N	25x25	132N	25x25
145	S	20x20	145S	20x20
145	N	25x25	145N	25x25
170	S	25x25	170S	25x25
170	N	35x30	170N	35x30
196	N	35x30	196N	35x30

BRAKE MOTORS

Motor information				BRAKE KIT (W/O Brake)		BRAKE KIT (w/ EMF Brake)			
				Light braking	Heavy braking	Light braking		Heavy braking	
Common SKU	Motor Type	Motor torque (Nm)	Motor voltage	Brake kit code	Brake kit code	Brake kit code	Safety coefficient	Brake kit code	Safety coefficient
Q3H80M2C	S	2.48	230/400V	FK08N000090N000X	FK08N000090N000X	FK08N0AA090N100X	3,23 - 4,84	FK08N0AA090N100X	3,23 - 4,84
Q3H80M2D	S	3.63	230/400V	FK08N000090N000X	FK08N000090N000X	FK08N0AA090N100X	2,2 - 3,31	FK08N0AA090N100X	2,2 - 3,31
Q3H80M4D	S	4.96	230/400V	FK08N000090N000X	FK08N000090N000X	FK08N0AA090N100X	1,61 - 2,42	FK08N0AA090N100X	1,61 - 2,42
Q3H80M2DE	C	4,93	230/400V	FK08L000090N000X	FK08L000090N000X	FK08L0AA090N100X	1,62 - 2,43	FK08L0AA090N100X	1,62 - 2,43
Q3H80M4DE	C	7,25	230/400V	FK08L000090N000X	FK08L000112N000X	FK08L0AA090N100X	1,1 - 1,66	FK08L0AA112N100X	2,21 - 3,59
Q2H80M2B	S	2,51	230/400V	FK08N000090N000X	FK08N000090N000X	FK08N0AA090N100X	3,19 - 4,78	FK08N0AA090N100X	3,19 - 4,78
Q2H80M2C	S	3,67	230/400V	FK08N000090N000X	FK08N000090N000X	FK08N0AA090N100X	2,18 - 3,27	FK08N0AA090N100X	2,18 - 3,27
Q2H80M4B	S	3,66	230/400V	FK08N000090N000X	FK08N000090N000X	FK08N0AA090N100X	2,19 - 3,28	FK08N0AA090N100X	2,19 - 3,28
Q2H80M4C	S	4,97	230/400V	FK08N000090N000X	FK08N000090N000X	FK08N0AA090N100X	1,61 - 2,41	FK08N0AA090N100X	1,61 - 2,41
Q2H80M2D	C	4,98	230/400V	FK08N000090N000X	FK08N000090N000X	FK08N0AA090N100X	1,61 - 2,41	FK08N0AA090N100X	1,61 - 2,41
Q2H80M2DE	C	7,32	230/400V	FK08L000090N000X	FK08L000112N000X	FK08L0AA090N100X	1,09 - 1,64	FK08L0AA112N100X	2,19 - 3,55
Q2H80M4D	C	7,35	230/400V	FK08N000090N000X	FK08N000112N000X	FK08N0AA090N100X	1,09 - 1,63	FK08N0AA112N100X	2,18 - 3,54
Q2H80M4DE	C	10,04	230/400V	FK08L000090N000X	FK08L000112N000X	FK08L0AA090N100X	0,8 - 1,2	FK08L0AA112N100X	1,59 - 2,59
Q3H80M4C	S	3,61	230/400V	FK08N000090N000X	FK08N000090N000X	FK08N0AA090N100X	2,22 - 3,32	FK08N0AA090N100X	2,22 - 3,32
Q3H80M6A	S	3,76	230/400V	FK08L000090N000X	FK08L000090N000X	FK08L0AA090N100X	2,13 - 3,19	FK08L0AA090N100X	2,13 - 3,19
Q3H80M6B	S	5,59	230/400V	FK08L000090N000X	FK08L000112N000X	FK08L0AA090N100X	1,43 - 2,15	FK08L0AA112N100X	2,86 - 4,65
Q3H90L2C	S	4,97	230/400V	FK09N000090N000X	FK09N000090N000X	FK09N0AA090N100X	1,61 - 2,41	FK09N0AA090N100X	1,61 - 2,41
Q3H90L2D	S	7,2	230/400V	FK09N000090N000X	FK09N000112N000X	FK09N0AA090N100X	1,11 - 1,67	FK09N0AA112N100X	2,22 - 3,61
Q3H90L4C	S	7,62	230/400V	FK09N000090N000X	FK09N000112N000X	FK09N0AA090N100X	1,05 - 1,57	FK09N0AA112N100X	2,1 - 3,41
Q3H90L4D	S	9,89	230/400V	FK09N000090N000X	FK09N000112N000X	FK09N0AA090N100X	0,81 - 1,21	FK09N0AA112N100X	1,62 - 2,63
Q3H90L6C	S	7,54	230/400V	FK09N000090N000X	FK09N000112N000X	FK09N0AA090N100X	1,06 - 1,59	FK09N0AA112N100X	2,12 - 3,45
Q3H90L6D	S	11,06	230/400V	FK09N000090N000X	FK09N000112N000X	FK09N0AA090N100X	0,72 - 1,08	FK09N0AA112N100X	1,45 - 2,35
Q3H90L2E	C	9,91	230/400V	FK09N000090N000X	FK09N000112N000X	FK09N0AA090N100X	0,81 - 1,21	FK09N0AA112N100X	1,61 - 2,62
Q3H90L4DE	C	14,46	230/400V	FK09L000112N000X	FK09L000132S000X	FK09L0AA112N100X	1,11 - 1,8	FK09L0AA132S100X	1,8 - 3,32
Q2H90S6B	S	7,6	230/400V	FK09N000090N000X	FK09N000112N000X	FK09N0AA090N100X	1,05 - 1,58	FK09N0AA112N100X	2,11 - 3,42
Q2H90L6C	S	11,2	230/400V	FK09N000090N000X	FK09N000112N000X	FK09N0AA090N100X	0,71 - 1,07	FK09N0AA112N100X	1,43 - 2,32
Q2H90L2D	C	9,92	230/400V	FK09N000090N000X	FK09N000112N000X	FK09N0AA090N100X	0,81 - 1,21	FK09N0AA112N100X	1,61 - 2,62
Q2H90L4D	C	14,62	230/400V	FK09N000112N000X	FK09N000132S000X	FK09N0AA112N100X	1,09 - 1,78	FK09N0AA132S100X	1,78 - 3,28
Q2H90L4DE	C	19,9	230/400V	FK09L000112N000X	FK09L000132S000X	FK09L0AA112N100X	0,8 - 1,31	FK09L0AA132S100X	1,31 - 2,41
Q2H90L2DE	SC	13,11	400/690V	FK09L000112N000X	FK09L000132S000X	FK09L0AA112N180X	1,22 - 1,98	FK09L0AA132S180X	1,98 - 3,66
Q3HS90S2C	S	4,92	230/400V	FK08L000090N000X	FK08L000112N000X	FK08L0AA090N100X	1,63 - 2,44	FK08L0AA112N100X	3,25 - 5,28
Q3HS90S4C	S	7,26	230/400V	FK08L000090N000X	FK08L000112N000X	FK08L0AA090N100X	1,1 - 1,65	FK08L0AA112N100X	2,2 - 3,58
Q2HS90S2B	S	4,98	230/400V	FK08N000090N000X	FK08N000112N000X	FK08N0AA090N100X	1,61 - 2,41	FK08N0AA112N100X	3,21 - 5,22
Q2HS90L2C	S	7,32	230/400V	FK08L000090N000X	FK08L000112N000X	FK08L0AA090N100X	1,09 - 1,64	FK08L0AA112N100X	2,19 - 3,55
Q2HS90S4B	S	7,35	230/400V	FK08N000090N000X	FK08N000112N000X	FK08N0AA090N100X	1,09 - 1,63	FK08N0AA112N100X	2,18 - 3,54
Q2HS90L4C	S	10,04	230/400V	FK08L000090N000X	FK08L000112N000X	FK08L0AA090N100X	0,8 - 1,2	FK08L0AA112N100X	1,59 - 2,59
Q3H100L4C	S	14,49	230/400V	FK10N000132N000X	FK10N000132N000X	FK10N0AA132N100X	1,79 - 3,31	FK10N0AA132N100X	1,79 - 3,31
Q3H100L4D	S	19,81	230/400V	FK10N000132N000X	FK10N000145N000X	FK10N0AA132N100X	1,31 - 2,42	FK10N0AA145N100X	2,27 - 4,04
Q3H100L6D	S	14,92	230/400V	FK10N000132N000X	FK10N000132N000X	FK10N0AA132N100X	1,74 - 3,22	FK10N0AA132N100X	1,74 - 3,22
Q3H100L2DE	C	13,01	400/690V	FK10N000112N000X	FK10N000132S000X	FK10N0AA112N180X	1,23 - 2	FK10N0AA132S180X	2 - 3,69
Q3H100L4E	C	26,44	400/690V	FK10L000132N000X	FK10L000145N000X	FK10L0AA132N180X	0,98 - 1,82	FK10L0AA145N180X	1,7 - 3,03
Q3H100L2D	S	9,73	230/400V	FK10N000112N000X	FK10N000132S000X	FK10N0AA112N100X	1,64 - 2,67	FK10N0AA132S100X	2,67 - 4,93
Q3H100L2E	SC	17,91	400/690V	FK10L000132N000X	FK10L000145N000X	FK10L0AA132N180X	1,45 - 2,68	FK10L0AA145N180X	2,51 - 4,47
Q2H100L6C	S	15	230/400V	FK10N000132N000X	FK10N000132N000X	FK10N0AA132N100X	1,73 - 3,2	FK10N0AA132N100X	1,73 - 3,2
Q2H100L4D	C	26,53	400/690V	FK10N000132N000X	FK10N000145N000X	FK10N0AA132N180X	0,98 - 1,81	FK10N0AA145N180X	1,7 - 3,02
Q2H100L2DE	SC	18,05	400/690V	FK10N000112N000X	FK10N000132S000X	FK10N0AA112N180X	0,89 - 1,44	FK10N0AA132S180X	1,44 - 2,66
Q2H100L2E	SC	24,74	400/690V	FK10L000132N000X	FK10L000145N000X	FK10L0AA132N180X	1,05 - 1,94	FK10L0AA145N180X	1,82 - 3,23
Q3HS100L2C	S	9,91	230/400V	FK09N000090N000X	FK09N000112N000X	FK09N0AA090N100X	0,81 - 1,21	FK09N0AA112N100X	1,61 - 2,62
Q3HS100L4C	S	14,56	230/400V	FK09L000112N000X	FK09L000132S000X	FK09L0AA112N100X	1,1 - 1,79	FK09L0AA132S100X	1,79 - 3,3
Q2HS100L2B	S	9,92	230/400V	FK09N000090N000X	FK09N000112N000X	FK09N0AA090N100X	0,81 - 1,21	FK09N0AA112N100X	1,61 - 2,62
Q2HS100L4B	S	14,62	230/400V	FK09N000112N000X	FK09N000132S000X	FK09N0AA112N100X	1,09 - 1,78	FK09N0AA132S100X	1,78 - 3,28
Q2HS100L4C	S	19,9	230/400V	FK09L000132N000X	FK09L000132N000X	FK09L0AA132N100X	1,31 - 2,41	FK09L0AA132N100X	1,31 - 2,41
Q2HS100L2C	C	13,11	400/690V	FK09L000112N000X	FK09L000132S000X	FK09L0AA112N180X	1,22 - 1,98	FK09L0AA132S180X	1,98 - 3,66
Q3H112M4D	S	26,31	400/690V	FK11N000132N000X	FK11N000145N000X	FK11N0AA132N180X	0,99 - 1,82	FK11N0AA145N180X	1,71 - 3,04
Q3H112M6D	S	21,95	230/400V	FK11N000132N000X	FK11N000145N000X	FK11N0AA132N100X	1,18 - 2,19	FK11N0AA145N100X	2,05 - 3,64
Q3H112M2C	S	13,04	400/690V	FK11N000132N000X	FK11N000132N000X	FK11N0AA132N180X	1,99 - 3,68	FK11N0AA132N180X	1,99 - 3,68
Q3H112M2D	C	17,99	400/690V	FK11N000132N000X	FK11N000145N000X	FK11N0AA132N180X	1,45 - 2,67	FK11N0AA145N180X	2,5 - 4,45

Motor information				BRAKE KIT (W/O Brake)		BRAKE KIT (w/ EMF Brake)			
				Light braking	Heavy braking	Light braking		Heavy braking	
Common SKU	Motor Type	Motor torque (Nm)	Motor voltage	Brake kit code	Brake kit code	Brake kit code	Safety coefficient	Brake kit code	Safety coefficient
Q3H112M2DE	C	24,55	400/690V	FK11L000132N000X	FK11L000145N000X	FK11L0AA132N180X	1,06 - 1,96	FK11L0AA145N180X	1,83 - 3,26
Q3H112M4E	C	36,4	400/690V	FK11L000132N000X	FK11L000145N000X	FK11L0AA132N180X	0,71 - 1,32	FK11L0AA145N180X	1,24 - 2,2
Q2H112M6C	S	22,3	230/400V	FK11N000132N000X	FK11N000145N000X	FK11N0AA132N100X	1,17 - 2,15	FK11N0AA145N100X	2,02 - 3,59
Q2H112M4D	C	36,35	400/690V	FK11N000132N000X	FK11N000145N000X	FK11N0AA132N180X	0,72 - 1,32	FK11N0AA145N180X	1,24 - 2,2
Q3HS112M2C	S	13,01	400/690V	FK10N000112N000X	FK10N000132S000X	FK10N0AA112N180X	1,23 - 2	FK10N0AA132S180X	2 - 3,69
Q2HS112M2B	S	13,17	400/690V	FK10N000112N000X	FK10N000132S000X	FK10N0AA112N180X	1,21 - 1,97	FK10N0AA132S180X	1,97 - 3,64
Q2HS112M4C	S	26,53	400/690V	FK10N000132N000X	FK10N000145N000X	FK10N0AA132N180X	0,98 - 1,81	FK10N0AA145N180X	1,7 - 3,02
Q2HS112M2C	C	18,05	400/690V	FK10N000112N000X	FK10N000132S000X	FK10N0AA112N180X	0,89 - 1,44	FK10N0AA132S180X	1,44 - 2,66
Q2HS112M2D	C	24,74	400/690V	FK10N000132N000X	FK10N000145N000X	FK10N0AA132N180X	1,05 - 1,94	FK10N0AA145N180X	1,82 - 3,23
Q4H132S2D	S	17,84	400/690V	FK13N000132N000X	FK13N000145N000X	FK13N0AA132N180X	1,46 - 2,69	FK13N0AA145N180X	2,52 - 4,48
Q4H132S2DE	S	24,39	400/690V	FK13N000132N000X	FK13N000145N000X	FK13N0AA132N180X	1,07 - 1,97	FK13N0AA145N180X	1,85 - 3,28
Q4H132S4C	S	35,63	400/690V	FK13N000145N000X	FK13N000170S000X	FK13N0AA145N180X	1,26 - 2,25	FK13N0AA170S180X	2,25 - 3,37
Q4H132M4DE	S	48,89	400/690V	FK13N000145N000X	FK13N000170S000X	FK13N0AA145N180X	0,92 - 1,64	FK13N0AA170S180X	1,64 - 2,45
Q3H132S4B	S	35,8	400/690V	FK13N000145N000X	FK13N000170S000X	FK13N0AA145N180X	1,26 - 2,23	FK13N0AA170S180X	2,23 - 3,35
Q3H132M4D	S	48,82	400/690V	FK13N000145N000X	FK13N000170S000X	FK13N0AA145N180X	0,92 - 1,64	FK13N0AA170S180X	1,64 - 2,46
Q3H132S6A	S	29,29	230/400V	FK13N000132N000X	FK13N000145N000X	FK13N0AA132N100X	0,89 - 1,64	FK13N0AA145N100X	1,54 - 2,73
Q3H132M6A	S	39,18	400/690V	FK13N000145N000X	FK13N000170S000X	FK13N0AA145N180X	1,15 - 2,04	FK13N0AA170S180X	2,04 - 3,06
Q3H132M6B	S	54,09	400/690V	FK13N000170N000X	FK13N000170N000X	FK13N0AA170N180X	1,48 - 2,22	FK13N0AA170N180X	1,48 - 2,22
Q3H132S2C	S	17,99	400/690V	FK13N000132N000X	FK13N000145N000X	FK13N0AA132N180X	1,45 - 2,67	FK13N0AA145N180X	2,5 - 4,45
Q3H132S2D	S	24,28	400/690V	FK13N000132N000X	FK13N000145N000X	FK13N0AA132N180X	1,07 - 1,98	FK13N0AA145N180X	1,85 - 3,29
Q3H132M2A	C	35,91	400/690V	FK13N000145N000X	FK13N000170S000X	FK13N0AA145N180X	1,25 - 2,23	FK13N0AA170S180X	2,23 - 3,34
Q3H132M2B	C	48,81	400/690V	FK13L000145N000X	FK13L000170S000X	FK13L0AA145N180X	0,92 - 1,64	FK13L0AA170S180X	1,64 - 2,46
Q3H132M4E	C	71,46	400/690V	FK13L000170N000X	FK13L000196N000X	FK13L0AA170N180X	1,12 - 1,68	FK13L0AA196N180X	1,82 - 3,36
Q2H132M4C	S	49,06	400/690V	FK13N000145N000X	FK13N000170S000X	FK13N0AA145N180X	0,92 - 1,63	FK13N0AA170S180X	1,63 - 2,45
Q2H132S6A	S	29,69	230/400V	FK13N000132N000X	FK13N000145N000X	FK13N0AA132N100X	0,88 - 1,62	FK13N0AA145N100X	1,52 - 2,69
Q2H132M6A	S	39,38	400/690V	FK13N000145N000X	FK13N000170S000X	FK13N0AA145N180X	1,14 - 2,03	FK13N0AA170S180X	2,03 - 3,05
Q2H132M6B	S	54,71	400/690V	FK13N000145N000X	FK13N000170S000X	FK13N0AA145N180X	0,82 - 1,46	FK13N0AA170S180X	1,46 - 2,19
Q2H132M2A	C	35,94	400/690V	FK13N000145N000X	FK13N000170S000X	FK13N0AA145N180X	1,25 - 2,23	FK13N0AA170S180X	2,23 - 3,34
Q2H132M2B	C	49,14	400/690V	FK13N000145N000X	FK13N000170S000X	FK13N0AA145N180X	0,92 - 1,63	FK13N0AA170S180X	1,63 - 2,44
Q2H132M2C	C	60,3	400/690V	FK13L000170N000X	FK13L000196N000X	FK13L0AA170N180X	1,33 - 1,99	FK13L0AA196N180X	2,16 - 3,98
Q2H132M4D	C	71,56	400/690V	FK13L000170N000X	FK13L000196N000X	FK13L0AA170N180X	1,12 - 1,68	FK13L0AA196N180X	1,82 - 3,35
Q2H132M4E	C	97,98	400/690V	FK13L000170N000X	FK13L000196N000X	FK13L0AA170N180X	0,82 - 1,22	FK13L0AA196N180X	1,33 - 2,45
Q3HS132S2C	S	18	400/690V	FK11N000132N000X	FK11N000145N000X	FK11N0AA132N180X	1,44 - 2,67	FK11N0AA145N180X	2,5 - 4,44
Q3HS132S2D	S	24,55	400/690V	FK11L000132N000X	FK11L000145N000X	FK11L0AA132N180X	1,06 - 1,96	FK11L0AA145N180X	1,83 - 3,26
Q2HS132S2B	S	18,02	400/690V	FK11N000132N000X	FK11N000145N000X	FK11N0AA132N180X	1,44 - 2,66	FK11N0AA145N180X	2,5 - 4,44
Q2HS132S2C	S	24,7	400/690V	FK11N000132N000X	FK11N000145N000X	FK11N0AA132N180X	1,05 - 1,94	FK11N0AA145N180X	1,82 - 3,24
Q2HS132S4A	S	36,35	400/690V	FK11N000132N000X	FK11N000145N000X	FK11N0AA132N180X	0,72 - 1,32	FK11N0AA145N180X	1,24 - 2,2
Q3H100L6C	S	11,06	230/400V	FK10N000112N000X	FK10N000112N000X	FK10N0AA112N100X	1,45 - 2,35	FK10N0AA112N100X	1,45 - 2,35
Q4H100L2D	S	9,71	230/400V	FK10N000112N000X	FK10N000132S000X	FK10N0AA112N100X	1,65 - 2,68	FK10N0AA132S100X	2,68 - 4,94
Q4H100L4E	S	20,11	230/400V	FK10L000132N000X	FK10L000145N000X	FK10L0AA132N100X	1,29 - 2,39	FK10L0AA145N100X	2,24 - 3,98
Q4H112M4E	S	26,71	400/690V	FK11L000132N000X	FK11L000145N000X	FK11L0AA132N180X	0,97 - 1,8	FK11L0AA145N180X	1,68 - 3
Q3H132S2DE	C	29,09	400/690V	FK13N000132N000X	FK13N000145N000X	FK13N0AA132N180X	0,89 - 1,65	FK13N0AA145N180X	1,55 - 2,75
Q4H132M2AE	C	35,73	400/690V	FK13L000145N000X	FK13L000170S000X	FK13L0AA145N180X	1,26 - 2,24	FK13L0AA170S180X	2,24 - 3,36
Q4H80M2D	S	2,43	230/400V	FK08N000090N000X	FK08N000090N000X	FK08N0AA090N100X	3,29 - 4,94	FK08N0AA090N100X	3,29 - 4,94
Q4H80M4E	S	5,08	230/400V	FK08L000090N000X	FK08L000090N000X	FK08L0AA090N100X	1,57 - 2,36	FK08L0AA090N100X	1,57 - 2,36
Q3H90L4E	S	10,2	230/400V	FK09N000090N000X	FK09N000112N000X	FK09N0AA090N100X	0,78 - 1,18	FK09N0AA112N100X	1,57 - 2,55
Q4H90L2D	S	4,86	230/400V	FK09N000090N000X	FK09N000090N000X	FK09N0AA090N100X	1,65 - 2,47	FK09N0AA090N100X	1,65 - 2,47
Q4H90L2E	S	7,11	230/400V	FK09N000090N000X	FK09N000112N000X	FK09N0AA090N100X	1,13 - 1,69	FK09N0AA112N100X	2,25 - 3,66
Q4H90L4E	S	10,31	230/400V	FK09N000090N000X	FK09N000112N000X	FK09N0AA090N100X	0,78 - 1,16	FK09N0AA112N100X	1,55 - 2,52
Q4H90L4D	S	7,45	230/400V	FK09N000090N000X	FK09N000112N000X	FK09N0AA090N100X	1,07 - 1,61	FK09N0AA112N100X	2,15 - 3,49
Q3HS132S4B	S	36,99	230/400V	FK11L000145N000X	FK11L000145N000X	FK11L0AA145N100X	1,22 - 2,16	FK11L0AA145N100X	1,22 - 2,16
Q4H80M4D	S	3,74	230/400V	FK08N000090N000X	FK08N000090N000X	FK08N0AA090N100X	2,14 - 3,21	FK08N0AA090N100X	2,14 - 3,21
Q4H100L6A	S	11,12	230/400V	FK10N000112N000X	FK10N000112N000X	FK10N0AA112N100X	1,44 - 2,34	FK10N0AA112N100X	1,44 - 2,34
Q4H80M2DE	S	3,57	230/400V	FK08L000090N000X	FK08L000090N000X	FK08L0AA090N100X	2,24 - 3,36	FK08L0AA090N100X	2,24 - 3,36
Q4H100L4C	S	10,16	230/400V	FK10N000132N000X	FK10N000132N000X	FK10N0AA132N100X	2,56 - 4,72	FK10N0AA132N100X	2,56 - 4,72
Q4H100L4D	S	14,8	230/400V	FK10N000132N000X	FK10N000132N000X	FK10N0AA132N100X	1,76 - 3,24	FK10N0AA132N100X	1,76 - 3,24
Q4H112M4D	S	20,32	230/400V	FK11L000132N000X	FK11L000145N000X	FK11L0AA132N100X	1,28 - 2,36	FK11L0AA145N100X	2,21 - 3,94
Q4H112M2D	S	12,91	400/690V	FK11N000112N000X	FK11N000132S000X	FK11N0AA112N180X	1,24 - 2,01	FK11N0AA132S180X	2,01 - 3,72

BRAKE KIT DIMENSIONS
(Based on EMF Brand Brake)

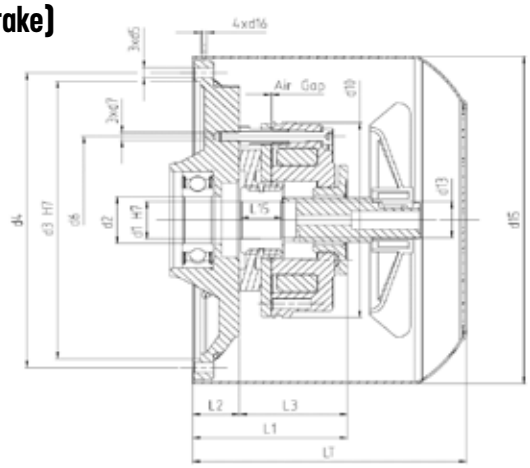

Brake kit SKU	"Mn (max)"	"d1 H7"	"d2 f6"	"d3 H7"	d4	d5	d6	d7	d10	d13	d15	d16	L1	"L2 h11"	L3	L15	Lt	Air gap	"Mass (only brake)"
FK08L0AA090N100X	12	20	20	140,5	149,6	M5	90	3xM5	105	20	155,5	4xM4	99	54	45	20	159	0,25	2 kg
FK08L0AA112N100X	26	20	20	140,5	149,6	M5	112	3xM6	130	20	155,5	4xM4	104	54	50	20	159	0,25	3,6 kg
FK08N0AA090N100X	12	20	20	140,5	149,6	M5	90	3xM5	105	20	155,5	4xM4	73,7	28,7	45	20	130	0,25	2 kg
FK08N0AA112N100X	26	20	20	140,5	149,6	M5	112	3xM6	130	20	155,5	4xM4	78,7	28,7	50	20	130	0,25	3,6 kg
FK09L0AA112N100X	26	20	20	149,5	158,6	M5	112	3xM6	130	20	174	4xM5	110	60	50	20	176,5	0,25	3,6 kg
FK09L0AA112N180X	26	20	20	149,5	158,6	M5	112	3xM6	130	20	174	4xM5	110	60	50	20	176,5	0,25	3,6 kg
FK09L0AA132N100X	48	25	25	149,5	158,6	M5	132	3xM6	150	25	174	4xM5	118	60	58	25	176,5	0,3	5,6 kg
FK09L0AA132S100X	48	20	20	149,5	158,6	M5	132	3xM6	150	20	174	4xM5	118	60	58	20	176,5	0,3	5,6 kg
FK09L0AA132S180X	48	20	20	149,5	158,6	M5	132	3xM6	150	20	174	4xM5	118	60	58	20	176,5	0,3	5,6 kg
FK09N0AA090N100X	12	20	20	149,5	158,6	M5	90	3xM5	105	20	174	4xM5	67,5	22,5	45	20	133,5	0,25	2 kg
FK09N0AA112N100X	26	20	20	149,5	158,6	M5	112	3xM6	130	20	174	4xM5	72,5	22,5	50	20	133,5	0,25	3,6 kg
FK09N0AA132S100X	48	20	20	149,5	158,6	M5	132	3xM6	150	20	174	4xM5	80,5	22,5	58	20	133,5	0,3	5,6 kg
FK10L0AA132N100X	48	25	25	166	178	M5	132	3xM6	150	25	192	4xM4	98,5	40,5	58	25	144	0,3	5,6 kg
FK10L0AA132N180X	48	25	25	166	178	M5	132	3xM6	150	25	192	4xM4	98,5	40,5	58	25	144	0,3	5,6 kg
FK10L0AA145N100X	80	25	25	166	178	M5	145	3xM8	165	25	192	4xM4	112,5	40,5	72	25	144	0,3	7,9 kg
FK10L0AA145N180X	80	25	25	166	178	M5	145	3xM8	165	25	192	4xM4	112,5	40,5	72	25	144	0,3	7,9 kg
FK10N0AA112N100X	26	20	20	166	178	M5	112	3xM6	130	20	192	4xM4	76	26	50	20	139	0,25	3,6 kg
FK10N0AA112N180X	26	20	20	166	178	M5	112	3xM6	130	20	192	4xM4	76	26	50	20	139	0,25	3,6 kg
FK10N0AA132N100X	48	25	25	166	178	M5	132	3xM6	150	25	192	4xM4	84	26	58	25	139	0,3	5,6 kg
FK10N0AA132N180X	48	25	25	166	178	M5	132	3xM6	150	25	192	4xM4	84	26	58	25	139	0,3	5,6 kg
FK10N0AA132S100X	48	20	20	166	178	M5	132	3xM6	150	20	192	4xM4	84	26	58	20	139	0,3	5,6 kg
FK10N0AA132S180X	48	20	20	166	178	M5	132	3xM6	150	20	192	4xM4	84	26	58	20	139	0,3	5,6 kg
FK10N0AA145N100X	80	25	25	166	178	M5	145	3xM8	165	25	192	4xM4	98	26	72	25	139	0,3	7,9 kg
FK10N0AA145N180X	80	25	25	166	178	M5	145	3xM8	165	25	192	4xM4	98	26	72	25	139	0,3	7,9 kg
FK11L0AA132N100X	48	25	25	182	193	M6	132	3xM6	150	25	216	4xM6	109	51	58	25	194	0,3	5,6 kg
FK11L0AA132N180X	48	25	25	182	193	M6	132	3xM6	150	25	216	4xM6	109	51	58	25	194	0,3	5,6 kg
FK11L0AA145N100X	80	25	25	182	193	M6	145	3xM8	165	25	216	4xM6	123	51	72	25	194	0,3	7,9 kg
FK11L0AA145N180X	80	25	25	182	193	M6	145	3xM8	165	25	216	4xM6	123	51	72	25	194	0,3	7,9 kg
FK11N0AA112N180X	26	20	20	182	193	M6	112	3xM6	130	20	216	4xM6	81	27,5	50	20	165	0,25	3,6 kg
FK11N0AA132S180X	48	20	20	182	193	M6	112	3xM6	150	20	216	4xM6	85,5	27,5	58	20	165	0,3	5,6 kg
FK11N0AA132N100X	48	25	25	182	193	M6	132	3xM6	150	25	216	4xM6	85,5	27,5	58	25	165	0,3	5,6 kg
FK11N0AA132N180X	48	25	25	182	193	M6	132	3xM6	150	25	216	4xM6	85,5	27,5	58	25	165	0,3	5,6 kg
FK11N0AA145N100X	80	25	25	182	193	M6	145	3xM8	165	25	216	4xM6	99,5	27,5	72	25	165	0,3	7,9 kg
FK11N0AA145N180X	80	25	25	182	193	M6	145	3xM8	165	25	216	4xM6	99,5	27,5	72	25	165	0,3	7,9 kg
FK13L0AA145N180X	80	25	25	225	241	M8	145	3xM8	165	25	253	4xM5	156	84	72	25	234	0,3	7,9 kg
FK13L0AA170N180X	120	35	35	225	241	M8	170	3xM8	190	35	253	4xM5	162	84	78	30	234	0,3	11,8 kg
FK13L0AA170S180X	120	25	25	225	241	M8	170	3xM8	190	25	253	4xM5	162	84	78	25	234	0,3	11,8 kg
FK13L0AA196N180X	240	35	35	225	241	M8	196	6xM8	217	35	253	4xM5	169	84	85	30	234	0,4	18,4 kg
FK13N0AA132N100X	48	25	25	225	241	M8	132	3xM6	150	25	253	4xM5	85,5	27,5	58	25	143	0,3	5,6 kg
FK13N0AA132N180X	48	25	25	225	241	M8	132	3xM6	150	25	253	4xM5	85,5	27,5	58	25	143	0,3	5,6 kg
FK13N0AA145N100X	80	25	25	225	241	M8	145	3xM8	165	25	253	4xM5	99,5	27,5	72	25	143	0,3	7,9 kg
FK13N0AA145N180X	80	25	25	225	241	M8	145	3xM8	165	25	253	4xM5	99,5	27,5	72	25	143	0,3	7,9 kg
FK13N0AA170N180X	120	35	35	225	241	M8	170	3xM8	190	35	253	4xM5	105,5	27,5	78	30	143	0,3	11,8 kg
FK13N0AA170S180X	120	25	25	225	241	M8	170	3xM8	190	25	253	4xM5	105,5	27,5	78	25	143	0,3	11,8 kg

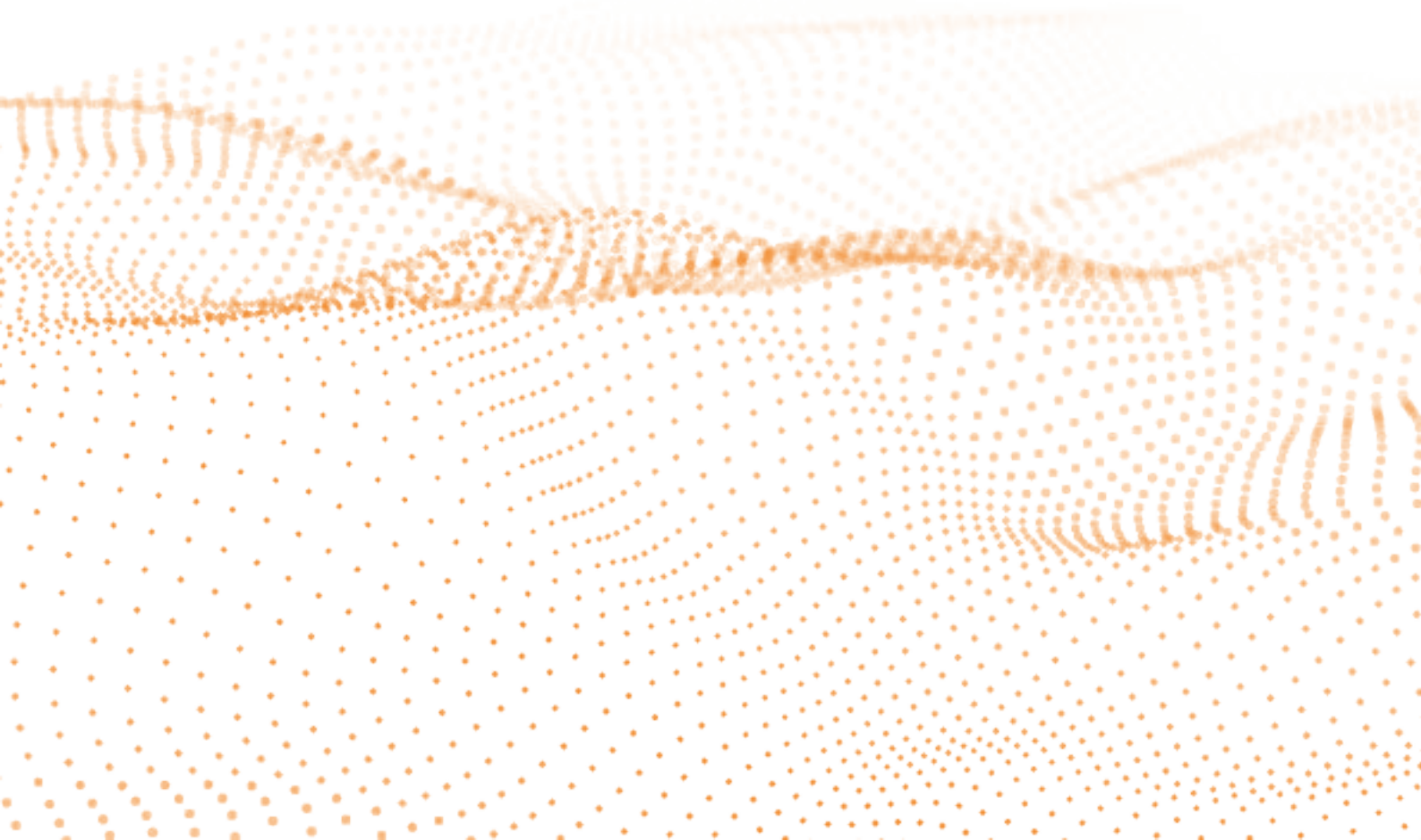

INVERTER INTEGRATED MOTORS

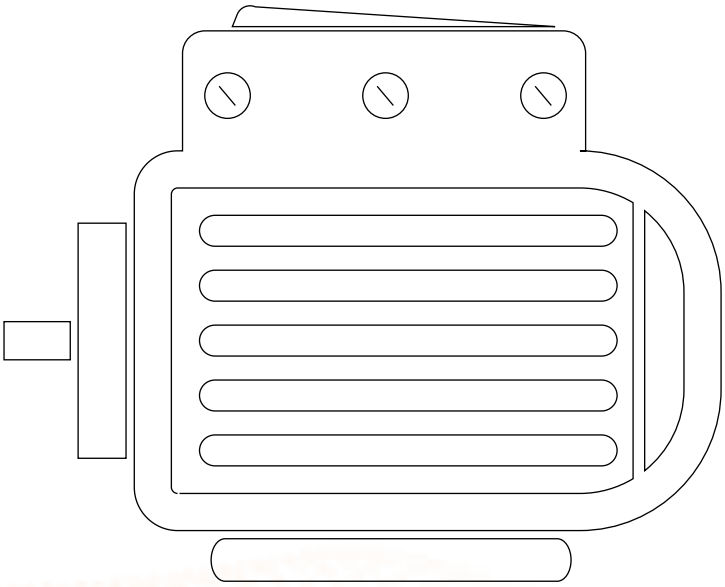

TECHNICAL DOCUMENTATION

Our inverter integrated motors are between 0,55-22,0 kW, and they are available from 80 to 200 frames. One of the main advantage of this type is that the motor parameters for inverter are setted and by ourself and there is no effect of cable between inverter and motor that can reduce motors' insulation life.

Motor Power [kW]	0.55	0.75	1.1	1.5	2.2	3	4	5.5	7.5	11	15	18.5	22
Supply voltage [V]	3~400 V [-15%]... 480 V [+10%], 50/60 Hz												
Effective nominal current [A] [at 400 V/8 kHz]	1.7	2.3	3.1	4	5.6	7.5	9.5	13	17.8	28.0	34.0	40.0	48.0
Maximum effective current with time [%]	150% for 60 Seconds												
Switching frequency [kHz]	4, 8, 16 [factory setting: 8 kHz]												
Rotating field frequency [kHz]	0... 400												
Ambient temperature for power rating [°C]	-10 to +40												
Process control	PID controller, freely configurable												
Protective functions	Undervoltage, overvoltage, 12t limitation, short circuits, motor temperature, inverter temperature, stall protection												

High Efficiency
(IE2/IE3 + Inverter)

Perfect macthing of
motor and inverter

Solutions for specific
applications

High temperature and
vibration resistance

TECHNICAL SPECIFICATIONS

- Perfect combination with IE3 motors
- Energy saving function, catch-on-fly function, PID on board
- Standard independence from motor fan
- User friendly MMI (M12 interface on board)
- 24V/100mA (160 mA) switching power supply integrated
- Very high durability through innovative DC bus
- Performance optimized flux reduction
- No power losses in the capacitor
- No aging of the capacitors, thus long-term storage without maintenance possible
- Almost unlimited ripple current persistency
- Less distortion in the power grid (less losses in the EMC filter and rectifier)
- Small construction volume
- Reduced weight
- Very good vibration resistance
- Very low leakage currents (<3.5 mA), thus application on 30m A FI (RCD Type B) possible

PAINTING

Our inverter entegrated motors are painted with a black protect ive paint according to RAL 9005 (black).

DIMENSION - B3

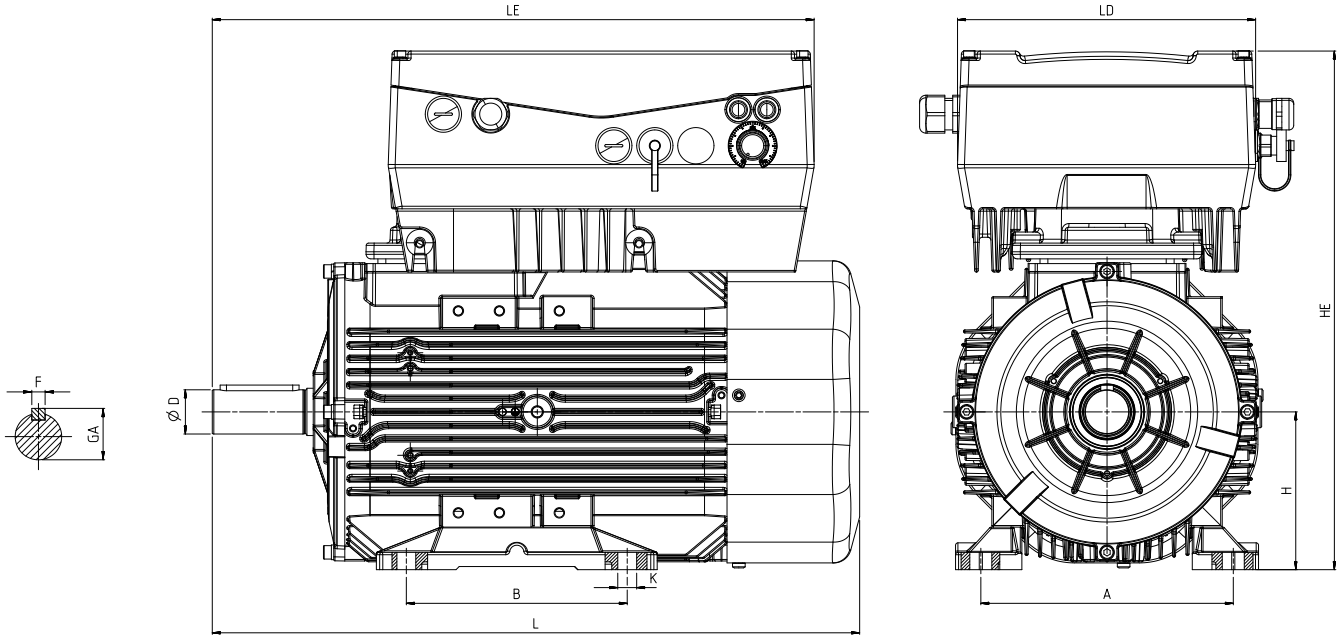

				Main Dimensions			Foot Mounted Motors					Shaft				Bearing		Seal	
Power [kW]	Number of Poles	Motor Type	Housing Type	LD	L	LE	B	A	H	HE	K	D[1]	E	GA	F[2]	Drive Side	Non drive Side	Drive Side	Non drive Side
0.75	2	Q3HD80M2C	Aluminium	189	268	365	100	125	80	290	10	19	40	21.5	6	6204-2Z	6204-2Z	20*30*7	20*30*7
	4	Q3HD80M4D	Aluminium	189	268	365	100	125	80	290	10	19	40	21.5	6	6204-2Z	6204-2Z	20*30*7	20*30*7
1.1	2	Q3HD80M2D	Aluminium	189	268	365	100	125	80	290	10	19	40	21.5	6	6204-2Z	6204-2Z	20*30*7	20*30*7
	4	Q3HSD90S4C	Aluminium	189	303	317	100	140	90	311	10	24	50	27	8	6305-2Z	6204-2Z	25*40*7	25*30*7
1.5	2	Q3HSD90S2C	Aluminium	189	303	317	100	140	90	311	10	24	50	27	8	6305-2Z	6204-2Z	25*40*7	25*30*7
	4	Q3HD90L4D	Aluminium	189	344	317	100	140	90	311	10	24	50	27	8	6305-2Z	6205-2Z	25*40*7	25*40*7
2.2	2	Q3HD90L2D	Aluminium	189	344	317	100	140	90	311	10	24	50	27	8	6305-2Z	6205-2Z	25*40*7	25*40*7
	4	Q3HSD100L4C	Aluminium	189	384	370	140	160	100	331	12	28	60	31	8	6306-2Z	6205-2Z	30*47*7	25*40*7
3	2	Q3HSD100L2C	Aluminium	189	349	370	140	160	100	331	12	28	60	31	8	6306-2Z	6205-2Z	30*47*7	25*40*7
	4	Q3HD100L4D	Aluminium	189	400	370	140	160	100	331	12	28	60	31	8	6306-2Z	6205-2Z	30*47*7	25*40*7
4	2	Q3HSD112M2C	Aluminium	189	399	396	140	190	112	333	12	28	60	31	8	6306-2Z	6205-2Z	30*47*7	25*40*7
	4	Q3HD112M4D	Aluminium	189	396	396	140	190	112	333	12	28	60	31	8	6306-2Z	6206-2Z	30*47*7	30*47*7
5.5	2	Q3HSD132S2C	Aluminium	223	422	476	140-178	216	132	314	12	38	80	41	10	6208-2Z	6208-2Z	40*62*10	30*47*7
	4	Q3HD132S4B	Aluminium	223	481	476	140-178	216	132	314	12	38	80	41	10	6208-2Z	6208-2Z	40*62*10	40*62*10
7.5	2	Q3HSD132S2D	Aluminium	223	447	476	140-178	216	132	314	12	38	80	41	10	6208-2Z	6206-2Z	40*62*10	30*47*7
	4	Q3HD132M4D	Aluminium	223	481	476	140-178	216	132	314	12	38	80	41	10	6208-2Z	6208-2Z	40*62*10	40*62*10

(1) Tolerance DIN EN 50347 “j6” up to 28mm, “k6” above 28mm
(2) According to DIN 6885
Please contact with us for motors above 7,5kW.

DIMENSION - B5, B35

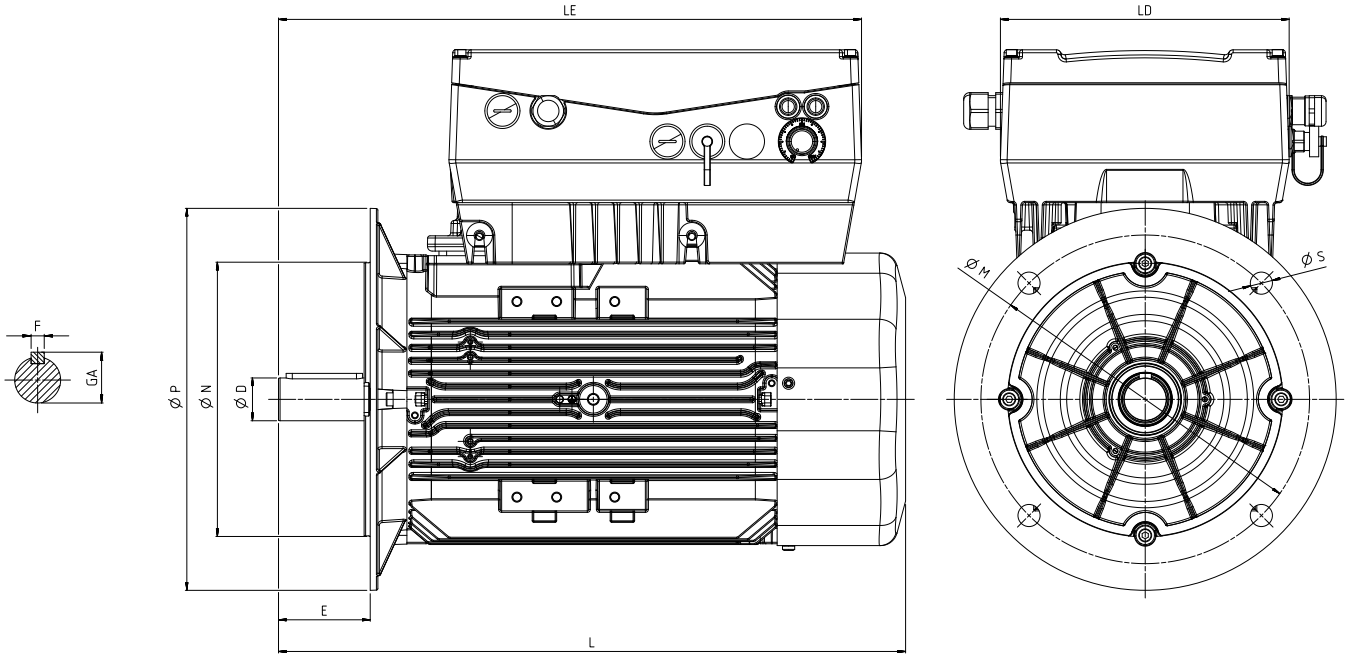

				Main Dimensions			Foot Mounted Motors					Shaft				Bearing		Seal		Flange (FA) (B5)				
Power (kW)	Number of Poles	Motor Type	Housing Type	LD	L	LE	B	A	H	HE	K	D[1]	E	GA	F[2]	Drive Side	Non drive Side	Drive Side	Non drive Side	P	N[3]	M	R	S
0.75	2	Q3HD80M2C	Aluminium	189	268	365	100	125	80	290	10	19	40	21.5	6	6204-2Z	6204-2Z	20*30*7	20*30*7	200	130	165	0	12
	4	Q3HD80M4D	Aluminium	189	268	365	100	125	80	290	10	19	40	21.5	6	6204-2Z	6204-2Z	20*30*7	20*30*7	200	130	165	0	12
1.1	2	Q3HD80M2D	Aluminium	189	268	365	100	125	80	290	10	19	40	21.5	6	6204-2Z	6204-2Z	20*30*7	20*30*7	200	130	165	0	12
	4	Q3HSD90S4C	Aluminium	189	303	317	100	140	90	311	10	24	50	27	8	6305-2Z	6204-2Z	25*40*7	25*30*7	200	130	165	0	12
1.5	2	Q3HSD90S2C	Aluminium	189	303	317	100	140	90	311	10	24	50	27	8	6305-2Z	6204-2Z	25*40*7	25*30*7	200	130	165	0	12
	4	Q3HD90L4D	Aluminium	189	344	317	100	140	90	311	10	24	50	27	8	6305-2Z	6205-2Z	25*40*7	25*40*7	200	130	165	0	12
2.2	2	Q3HD90L2D	Aluminium	189	344	317	100	140	90	311	10	24	50	27	8	6305-2Z	6205-2Z	25*40*7	25*40*7	200	130	165	0	12
	4	Q3HSD100L4C	Aluminium	189	384	370	140	160	100	331	12	28	60	31	8	6306-2Z	6205-2Z	30*47*7	25*40*7	250	180	215	0	14.5
3	2	Q3HSD100L2C	Aluminium	189	349	370	140	160	100	331	12	28	60	31	8	6306-2Z	6205-2Z	30*47*7	25*40*7	250	180	215	0	14.5
	4	Q3HD100L4D	Aluminium	189	400	370	140	160	100	331	12	28	60	31	8	6306-2Z	6205-2Z	30*47*7	25*40*7	250	180	215	0	14.5
4	2	Q3HSD112M2C	Aluminium	189	399	396	140	190	112	333	12	28	60	31	8	6306-2Z	6205-2Z	30*47*7	25*40*7	250	180	215	0	14.5
	4	Q3HD112M4D	Aluminium	189	396	396	140	190	112	333	12	28	60	31	8	6306-2Z	6206-2Z	30*47*7	30*47*7	250	180	215	0	14.5
5.5	2	Q3HSD132S2C	Aluminium	223	422	476	140-178	216	132	314	12	38	80	41	10	6208-2Z	6208-2Z	40*62*10	30*47*7	300	230	265	0	14.5
	4	Q3HD132S4B	Aluminium	223	481	476	140-178	216	132	314	12	38	80	41	10	6208-2Z	6208-2Z	40*62*10	40*62*10	300	230	265	0	14.5
7.5	2	Q3HSD132S2D	Aluminium	223	447	476	140-178	216	132	314	12	38	80	41	10	6208-2Z	6206-2Z	40*62*10	30*47*7	300	230	265	0	14.5
	4	Q3HD132M4D	Aluminium	223	481	476	140-178	216	132	314	12	38	80	41	10	6208-2Z	6208-2Z	40*62*10	40*62*10	300	230	265	0	14.5

(1) Tolerance DIN EN 50347 “j6” up to 28mm, “k6” above 28mm
(2) According to DIN 6885
(3) Tolerance DIN EN 50347 “j6”
Please contact with us for motors above 7,5kW.

DIMENSION - B14a, B34a

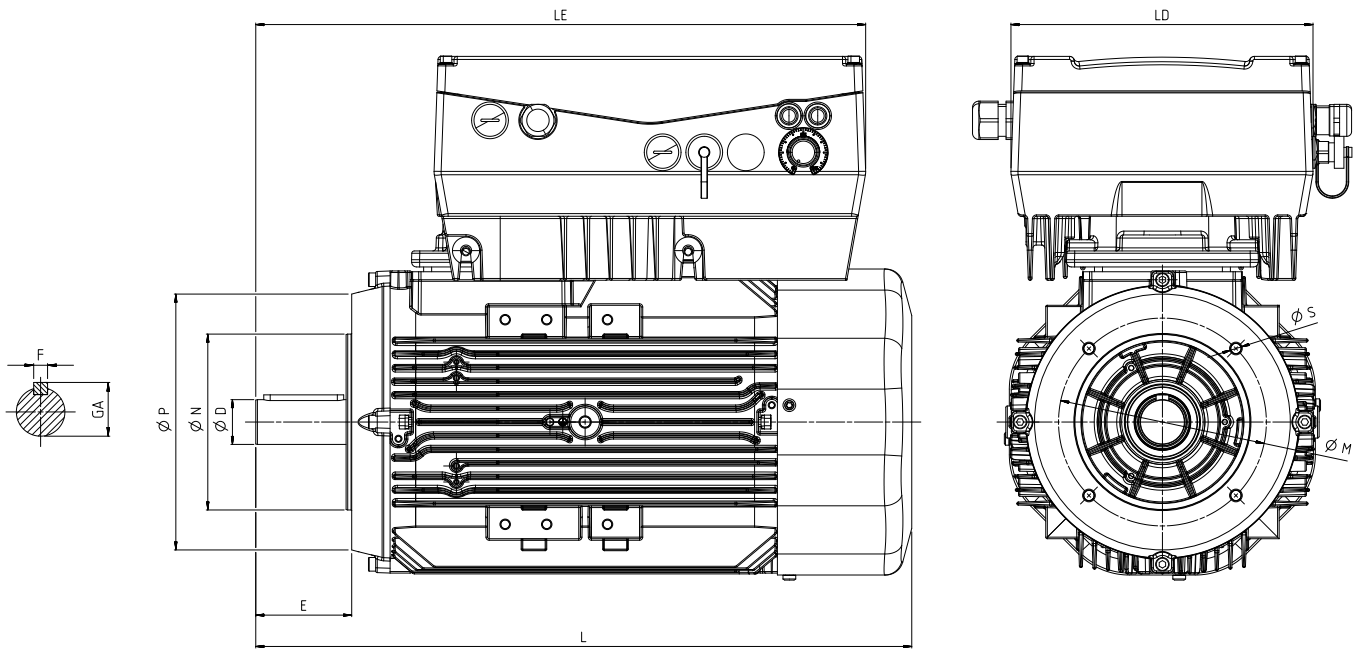

				Main Dimensions			Foot Mounted Motors					Shaft				Bearing		Seal		Flange (FC) (B14a)				
Power (kW)	Number of Poles	Motor Type	Housing Type	LD	L	LE	B	A	H	HE	K	D[1]	E	GA	F[2]	Drive Side	Non drive Side	Drive Side	Non drive Side	P	N[3]	M	R	S
0.75	2	Q3HD80M2C	Aluminium	189	268	365	100	125	80	290	10	19	40	21.5	6	6204-2Z	6204-2Z	20*30*7	20*30*7	120	80	100	0	M6
	4	Q3HD80M4D	Aluminium	189	268	365	100	125	80	290	10	19	40	21.5	6	6204-2Z	6204-2Z	20*30*7	20*30*7	120	80	100	0	M6
1.1	2	Q3HD80M2D	Aluminium	189	268	365	100	125	80	290	10	19	40	21.5	6	6204-2Z	6204-2Z	20*30*7	20*30*7	120	80	100	0	M6
	4	Q3HSD90S4C	Aluminium	189	303	317	100	140	90	311	10	24	50	27	8	6305-2Z	6204-2Z	25*40*7	25*30*7	140	95	115	0	M8
1.5	2	Q3HSD90S2C	Aluminium	189	303	317	100	140	90	311	10	24	50	27	8	6305-2Z	6204-2Z	25*40*7	25*30*7	140	95	115	0	M8
	4	Q3HD90L4D	Aluminium	189	344	317	100	140	90	311	10	24	50	27	8	6305-2Z	6205-2Z	25*40*7	25*40*7	140	95	115	0	M8
2.2	2	Q3HD90L2D	Aluminium	189	344	317	100	140	90	311	10	24	50	27	8	6305-2Z	6205-2Z	25*40*7	25*40*7	140	95	115	0	M8
	4	Q3HSD100L4C	Aluminium	189	384	370	140	160	100	331	12	28	60	31	8	6306-2Z	6205-2Z	30*47*7	25*40*7	160	110	130	0	M8
3	2	Q3HSD100L2C	Aluminium	189	349	370	140	160	100	331	12	28	60	31	8	6306-2Z	6205-2Z	30*47*7	25*40*7	160	110	130	0	M8
	4	Q3HD100L4D	Aluminium	189	400	370	140	160	100	331	12	28	60	31	8	6306-2Z	6205-2Z	30*47*7	25*40*7	160	110	130	0	M8
4	2	Q3HSD112M2C	Aluminium	189	399	396	140	190	112	333	12	28	60	31	8	6306-2Z	6205-2Z	30*47*7	25*40*7	160	110	130	0	M8
	4	Q3HD112M4D	Aluminium	189	396	396	140	190	112	333	12	28	60	31	8	6306-2Z	6206-2Z	30*47*7	30*47*7	160	110	130	0	M8
5.5	2	Q3HSD132S2C	Aluminium	223	422	476	140-178	216	132	314	12	38	80	41	10	6208-2Z	6206-2Z	40*62*10	30*47*7	200	130	165	0	M10
	4	Q3HD132S4B	Aluminium	223	481	476	140-178	216	132	314	12	38	80	41	10	6208-2Z	6206-2Z	40*62*10	40*62*10	200	130	165	0	M10
7.5	2	Q3HSD132S2D	Aluminium	223	447	476	140-178	216	132	314	12	38	80	41	10	6208-2Z	6206-2Z	40*62*10	30*47*7	200	130	165	0	M10
	4	Q3HD132M4D	Aluminium	223	481	476	140-178	216	132	314	12	38	80	41	10	6208-2Z	6206-2Z	40*62*10	40*62*10	200	130	165	0	M10

(1) Tolerance DIN EN 50347 “j6” up to 28mm, “k6” above 28mm
(2) According to DIN 6885
(3) Tolerance DIN EN 50347 “j6”
Please contact with us for motors above 7,5kW.

DIMENSION - B14b, B34b

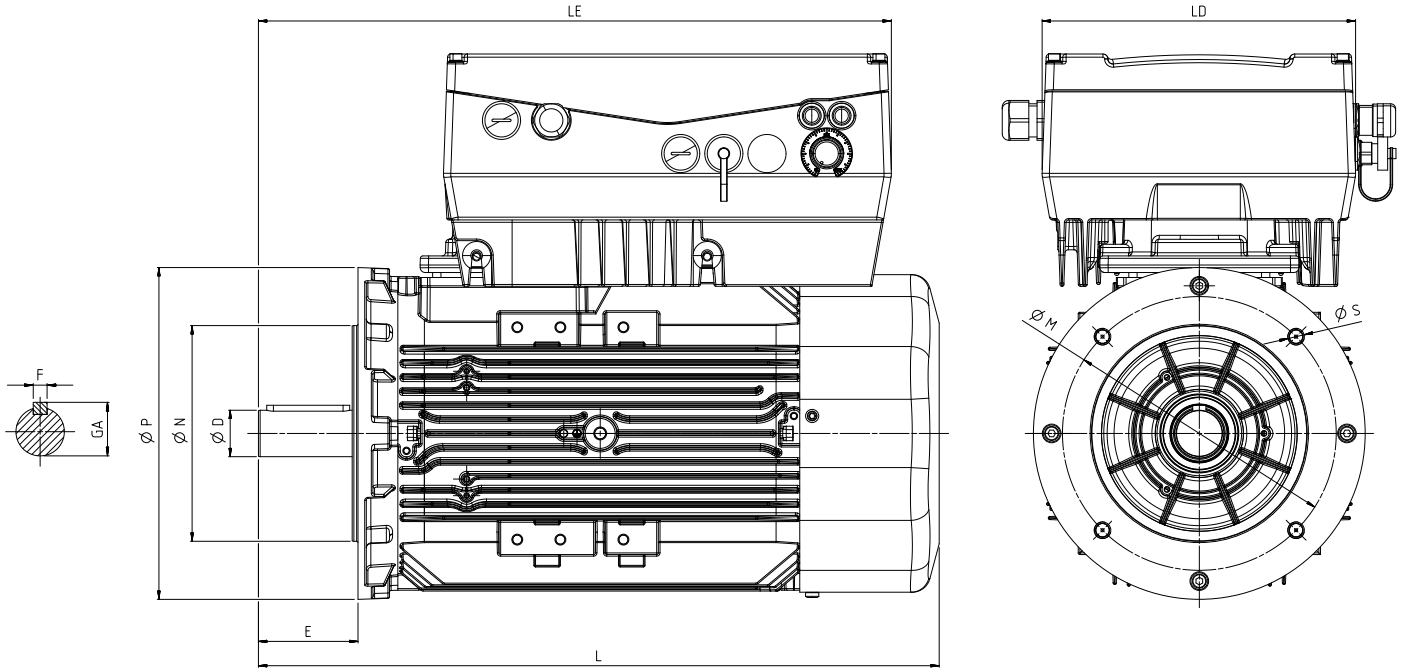

				Main Dimensions			Foot Mounted Motors					Shaft				Bearing		Seal		Flange (FB) (B14b)				
Power [kW]	Number of Poles	Motor Type	Housing Type	LD	L	LE	B	A	H	HE	K	D[1]	E	GA	F[2]	Drive Side	Non drive Side	Drive Side	Non drive Side	P	N[3]	M	R	S
0.75	2	Q3HD80M2C	Aluminium	189	268	365	100	125	80	290	10	19	40	21.5	6	6204-2Z	6204-2Z	20*30*7	20*30*7	160	110	130	0	M8
	4	Q3HD80M4D	Aluminium	189	268	365	100	125	80	290	10	19	40	21.5	6	6204-2Z	6204-2Z	20*30*7	20*30*7	160	110	130	0	M8
1.1	2	Q3HD80M2D	Aluminium	189	268	365	100	125	80	290	10	19	40	21.5	6	6204-2Z	6204-2Z	20*30*7	20*30*7	160	110	130	0	M8
	4	Q3HSD90S4C	Aluminium	189	303	317	100	140	90	311	10	24	50	27	8	6305-2Z	6204-2Z	25*40*7	25*30*7	160	110	130	0	M8
1.5	2	Q3HSD90S2C	Aluminium	189	303	317	100	140	90	311	10	24	50	27	8	6305-2Z	6204-2Z	25*40*7	25*30*7	160	110	130	0	M8
	4	Q3HD90L4D	Aluminium	189	344	317	100	140	90	311	10	24	50	27	8	6305-2Z	6205-2Z	25*40*7	25*40*7	160	110	130	0	M8
2.2	2	Q3HD90L2D	Aluminium	189	344	317	100	140	90	311	10	24	50	27	8	6305-2Z	6205-2Z	25*40*7	25*40*7	160	110	130	0	M8
	4	Q3HSD100L4C	Aluminium	189	384	370	140	160	100	331	12	28	60	31	8	6306-2Z	6205-2Z	30*47*7	25*40*7	200	130	165	0	M10
3	2	Q3HSD100L2C	Aluminium	189	349	370	140	160	100	331	12	28	60	31	8	6306-2Z	6205-2Z	30*47*7	25*40*7	200	130	165	0	M10
	4	Q3HD100L4D	Aluminium	189	400	370	140	160	100	331	12	28	60	31	8	6306-2Z	6205-2Z	30*47*7	25*40*7	200	130	165	0	M10
4	2	Q3HSD112M2C	Aluminium	189	399	396	140	190	112	333	12	28	60	31	8	6306-2Z	6205-2Z	30*47*7	25*40*7	200	130	165	0	M10
	4	Q3HD112M4D	Aluminium	189	396	396	140	190	112	333	12	28	60	31	8	6306-2Z	6206-2Z	30*47*7	30*47*7	200	130	165	0	M10
5.5	2	Q3HSD132S2C	Aluminium	223	422	476	140-178	216	132	314	12	38	80	41	10	6208-2Z	6206-2Z	40*62*10	30*47*7	250	180	215	0	M12 or 15
	4	Q3HD132S4B	Aluminium	223	481	476	140-178	216	132	314	12	38	80	41	10	6208-2Z	6206-2Z	40*62*10	40*62*10	250	180	215	0	M12 or 15
7.5	2	Q3HSD132S2D	Aluminium	223	447	476	140-178	216	132	314	12	38	80	41	10	6208-2Z	6206-2Z	40*62*10	30*47*7	250	180	215	0	M12 or 15
	4	Q3HD132M4D	Aluminium	223	481	476	140-178	216	132	314	12	38	80	41	10	6208-2Z	6206-2Z	40*62*10	40*62*10	250	180	215	0	M12 or 15

(1) Tolerance DIN EN 50347 “j6” up to 28mm, “k6” above 28mm
(2) According to DIN 6885
(3) Tolerance DIN EN 50347 “j6”

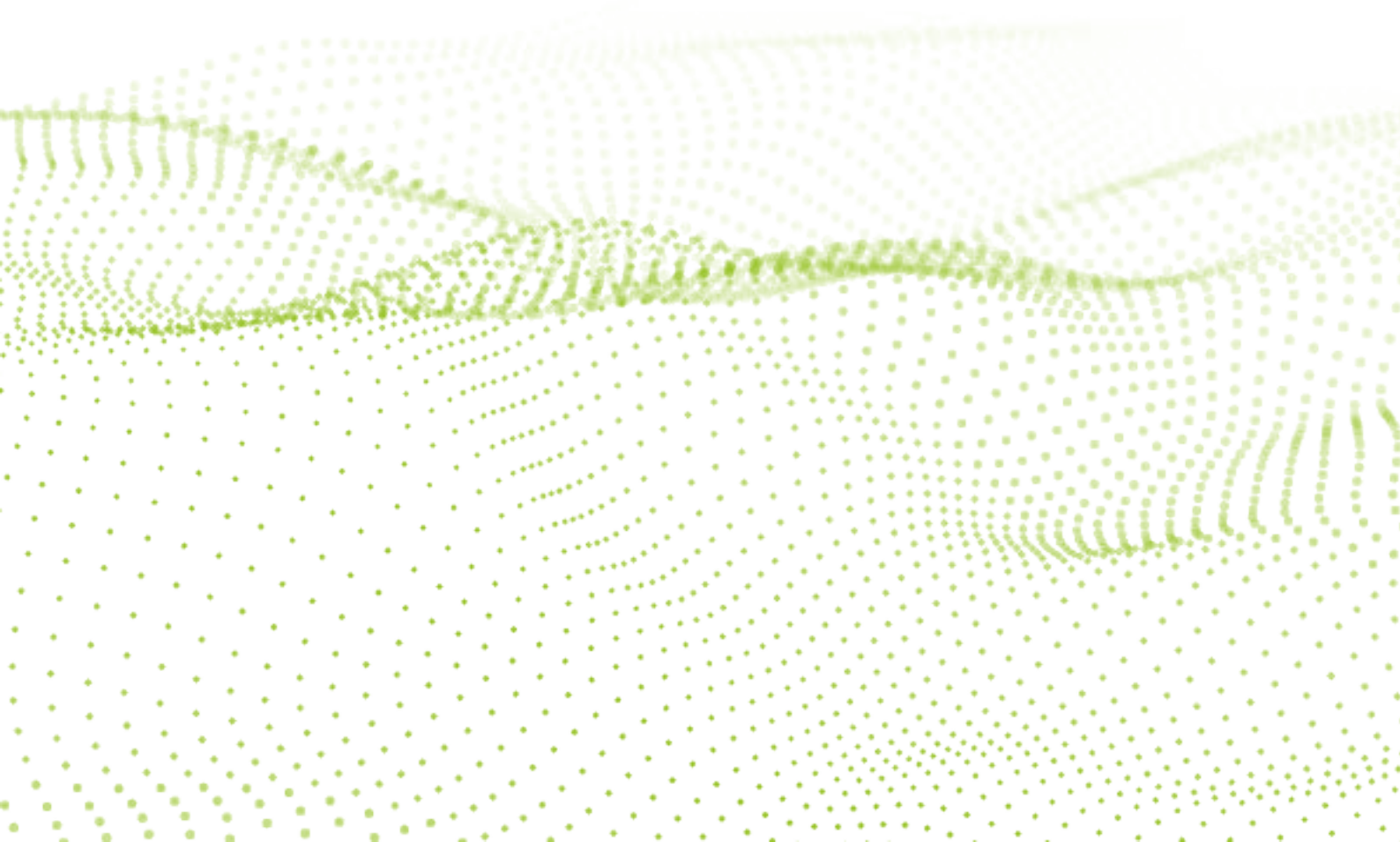

SINGLE PHASE MOTORS

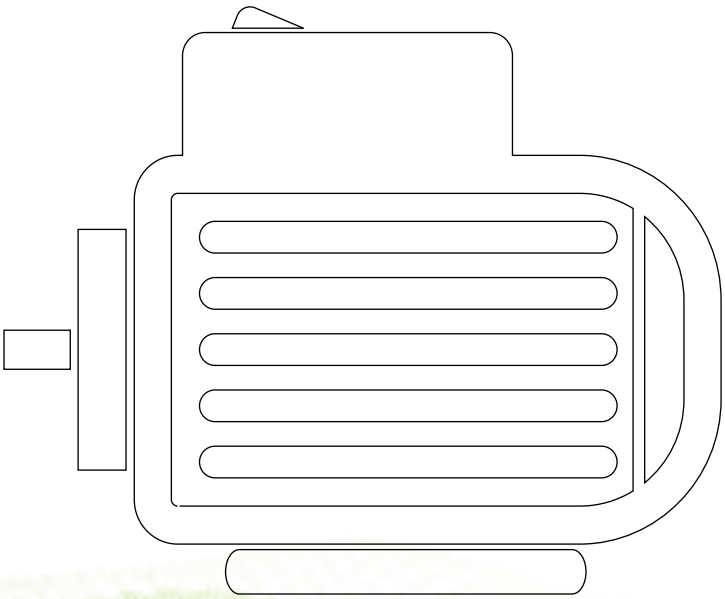

TECHNICAL DOCUMENTATION

Motors are manufactured in IEC 63-100 frame size as single phase, fully closed, short-circuit rotor and fan cooling.

Motors have been designed according to 230V, 50Hz as standard. Motors with other voltage and 60Hz frequency rating can be manufactured on demand.

QM type single phase motors are with run capacitors and QC type single phase motors are with start and run capacitors.

QM type motors with run capacitor:
400V run capacitor is used in the motors.

QC type motors with start and run capacitor:
Motors have electronic relay as well as 400V run capacitor and start capacitor. These type of motors with high startup moment have the capability of 300 start/stop per hour. Frequent direction of rotation change, will affect this capability. If you have such an application, please contact with us to get more detailed information. Thanks to current smoothing and rotor blocking protection properties of electronic relay, our single phase motors are guaranteed an extended service life.

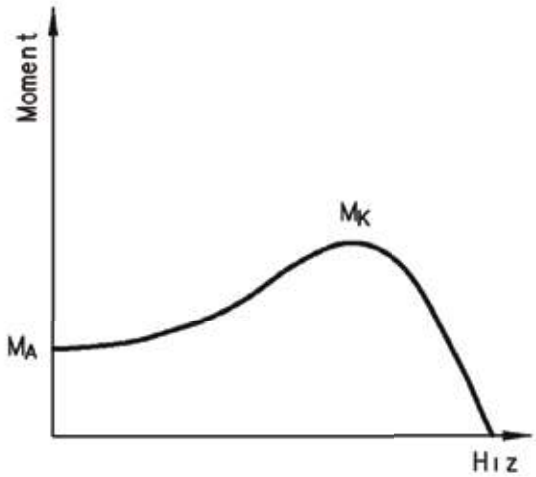

Torque-Speed curve of QM type motors with run capacitor

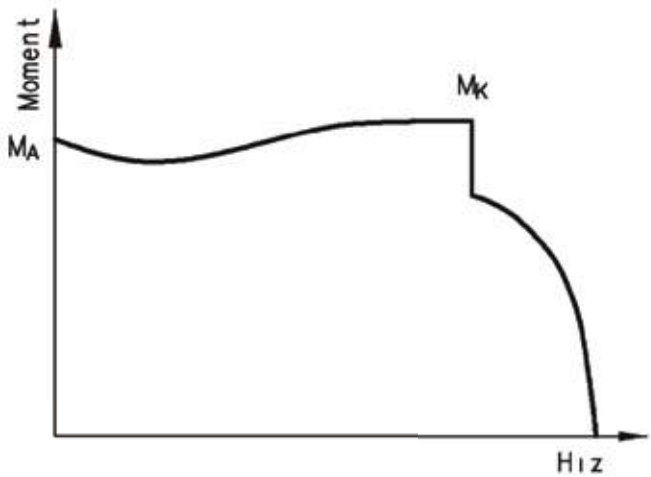

Torque-Speed curve of QC type motors with start and run capacitor

Thanks to the electronic relay, the starting torque (MA) of QC type motors is 2.5-3 times the nominal torque.

ELECTRICAL CHARACTERISTICS AT 50 Hz

	MOTOR TYPE	HOUSING TYPE	RATED VALUES					STARTING VALUES		Breakdown Torque Ratio	η %	Cos φ	µF	J	Weight [B3]
			Power		Speed	Current	Torque	Current	Torque						
			HP	kW	rpm	A	Nm	IA/ IN	MA / MN	Mk/ Mn			[400 V]	kgm²	kg
	2 pole 3000 rpm														
230V 50Hz	QM63M2B	Aluminium	1/3	0,25	2780	1,95	0,85	3,6	0,60	1,90	60	0,94	10	0,00021	6
	QM63M2C	Aluminium	1/2	0,37	2780	2,80	1,28	3,6	0,60	1,80	61	0,94	15	0,00026	6
	QM63M2D	Aluminium	3/4	0,55	2820	4,00	1,88	4,0	0,55	1,80	63	0,93	15	0,00030	7
	QM71M2A	Aluminium	1/3	0,25	2780	2,00	0,85	3,8	0,80	2,20	63	0,93	12,5	0,00028	6
	QM71M2B	Aluminium	1/2	0,37	2780	2,85	1,25	3,8	0,70	2,20	66	0,92	18	0,00035	7
	QM71M2C	Aluminium	3/4	0,55	2800	4,00	1,89	3,8	0,60	2,10	67	0,88	20	0,00040	8
	QM71M2D	Aluminium	1,0	0,75	2800	4,80	2,56	4,2	0,55	2,00	69	0,94	25	0,00051	9
	QM80M2A	Aluminium	3/4	0,55	2820	3,90	1,88	4,0	0,70	2,10	64	0,95	20	0,00092	10
	QM80M2B	Aluminium	1,0	0,75	2820	5,00	2,56	4,0	0,70	2,10	68	0,94	25	0,00107	11
	QM80M2C	Aluminium	1,5	1,10	2800	7,80	3,75	3,8	0,60	2,00	68	0,86	30	0,00126	12
	QM90S2A	Aluminium	1,5	1,10	2820	7,70	3,75	4,5	0,70	2,10	72	0,88	30	0,00118	14
	QM90L2A	Aluminium	2,0	1,50	2840	9,90	5,12	4,5	0,65	2,10	74	0,94	40	0,00152	16
	QM90L2C	Aluminium	3,0	2,20	2790	14,50	7,53	4,5	0,55	2,10	74	0,90	50	0,00172	18
	QM100L2B	Aluminium	4,0	3,00	2750	18,70	10,10	2,7	0,40	1,80	75	0,97	80	0,00213	22
	4 pole 1500 rpm														
230V 50Hz	QM63M4B	Aluminium	1/6	0,12	1400	1,10	1,12	3,5	0,70	2,00	51	0,91	12,5	0,00025	6
	QM71M4A	Aluminium	1/4	0,18	1400	1,50	1,24	3,5	0,70	2,00	57	0,92	12,5	0,00071	6,5
	QM71M4B	Aluminium	1/3	0,25	1400	2,00	1,72	3,5	0,70	2,00	60	0,90	15	0,00095	7,5
	QM71M4C	Aluminium	1/2	0,37	1400	2,70	2,54	3,5	0,65	1,90	64	0,91	20	0,00107	8,0
	QM80M4A	Aluminium	1/2	0,37	1400	2,60	2,52	3,5	0,70	1,80	66	0,84	20	0,00167	9,5
	QM80M4B	Aluminium	3/4	0,55	1390	3,80	3,78	2,2	0,70	1,80	68	0,95	25	0,00204	10,5
	QM80M4C	Aluminium	1,0	0,75	1380	5,00	5,23	3,5	0,65	1,75	69	0,95	30	0,00229	11,5
	QM90S4A	Aluminium	1,0	0,75	1400	5,50	5,15	4,5	0,60	1,80	68	0,88	30	0,00237	14
	QM90L4A	Aluminium	1,5	1,10	1400	7,40	7,50	4,5	0,65	1,90	69	0,90	40	0,00309	16
	QM90L4C	Aluminium	2,0	1,50	1400	10,20	10,31	5,0	0,55	1,60	69	0,90	50	0,00351	18
	QM100L4B	Aluminium	3,0	2,20	1410	13,50	15,34	3,0	0,55	1,80	76	0,94	75	0,00471	24

DIMENSION

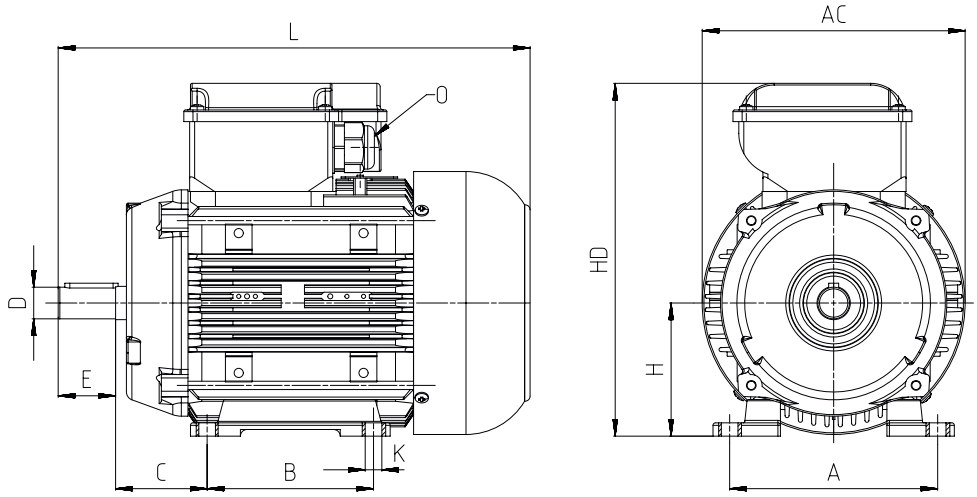

B3-B6-B7-B8-V5-V6

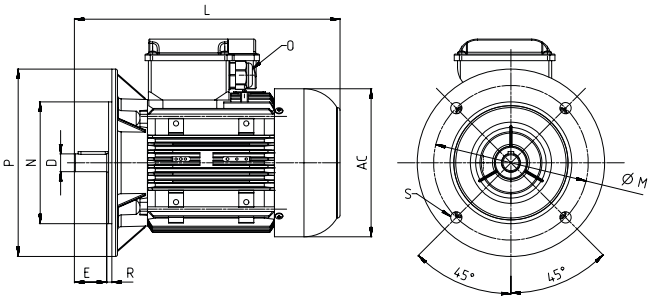

B14-V18-V19

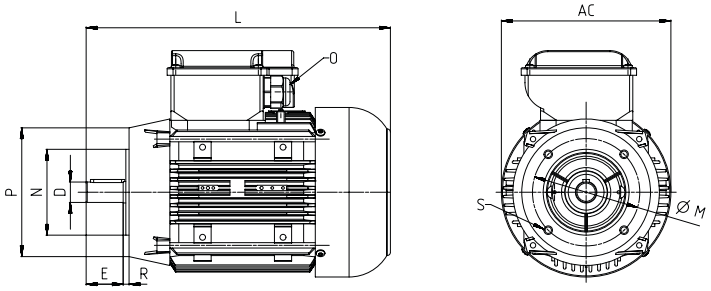

B5-V1-V3

			Main Dimensions			Foot Mounted Motors						Shaft				Bearing		Seal		Flange						
Frame Size	Housing Type	No. Of poles	AC	L	O	B	A	H	HD	K	C	D[1]	E	GA	F[2]	Drive Side	Non Drive Side	Drive Side	Non Drive Side	Mounting Type	Flange Type	P	N[3]	M	R	S
63 M	Aluminium	2...4	123	220	1*M20	80	100	63	182	7	40	11	23	12.5	4	6201-2Z	6201-2Z	12*22*7	12*22*7	B5	FA	140	95	115	0	10
																				B14	FB	120	80	100	0	M6
																				B14	FC	90	60	75	0	M5
71 M	Aluminium	2...4	138	253	1*M20	90	112	71	198	7	45	14	30	16.0	5	6202-2Z	6202-2Z	15*24*5	15*24*5	B5	FA	160	110	130	0	10
																				B14	FB	140	95	115	0	M8
																				B14	FC	105	70	85	0	M6
80 M	Aluminium	2...4	158	284	1*M20	100	125	80	215	10	50	19	40	21.5	6	6204-2Z	6204-2Z	20*30*7	20*30*7	B5	FA	200	130	165	0	12
																				B14	FB	160	110	130	0	M8
																				B14	FC	120	80	100	0	M6
S				297		100														B5	FA	200	130	165	0	12
90	Aluminium	2...4	193		1*M20		140	90	241	10	56	24	50	27.0	8	6305-2Z	6205-2Z	25*40*7	25*40*7	B14	FB	160	110	130	0	M8
L				317		125														B14	FC	140	95	115	0	M8
100 L	Aluminium	2...4	217	352	1*M25	140	160	100	241	12	63	28	60	31.0	8	6306-2Z	6205-2Z	30*47*7	25*40*7	B5	FA	250	180	215	0	14.5
																				B14	FB	200	130	165	0	M10
																				B14	FC	160	110	130	0	M8

Dimensions are in mm
(1) Tolerance DIN EN 50347 “j6”
(2) According to DIN 6885
(3) Tolerance DIN EN 50347 “j6”

ELECTRICAL CHARACTERISTICS AT 50 Hz

	MOTOR TYPE	HOUSING TYPE	RATED VALUES					STARTING VALUES		Breakdown Torque Ratio	η %	Cos φ	Capacitor		J	Weight [B3]
			Power		Speed	Current	Torque	Current	Torque				Run	Start		
			HP	kW	rpm	A	Nm	I_A/I_N	M_A/M_N	Mk/ Mn			µF	µF	kgm^2	kg
	2 pole 3000 rpm															
230V 50Hz	QC80M2A	Aluminium	3/4	0.55	2800	3.80	1.88	4.9	2.70	2.10	64	0.98	20	124-149	0.00092	10
	QC80M2B	Aluminium	1.0	0.75	2800	4.95	2.56	4.9	2.70	2.10	68	0.98	25	124-149	0.00107	11
	QC80M2C	Aluminium	1.5	1.10	2800	7.70	3.75	5.1	2.60	2.00	68	0.86	30	145-175	0.00126	12
	QC90S2A	Aluminium	1.5	1.10	2800	7.60	3.75	5.0	2.95	2.10	72	0.88	30	189-227	0.00118	15
	QC90L2A	Aluminium	2.0	1.50	2810	9.10	5.10	5.1	2.95	2.10	74	0.94	40	189-227	0.00152	17
	QC90L2C	Aluminium	3.0	2.20	2780	14.50	7.53	5.2	2.95	2.10	74	0.90	50	280-333	0.00172	19
	QC100L2B	Aluminium	4.0	3.00	2860	17.80	10.10	2.5	1.80	1.80	75	0.97	80	189-227	0.00213	23
	4 pole 1500 rpm															
230V 50Hz	QC80M4A	Aluminium	1/2	0.37	1390	2.80	2.54	4.5	2.50	1.80	66	0.84	20	130-156	0.00167	10
	QC80M4B	Aluminium	3/4	0.55	1390	3.70	3.80	4.5	2.55	1.80	69	0.98	25	130-156	0.00204	11
	QC80M4C	Aluminium	1.0	0.75	1370	5.00	5.20	4.6	2.65	1.75	69	0.95	30	130-156	0.00229	12
	QC90S4A	Aluminium	1.0	0.75	1400	5.80	5.15	4.8	2.85	1.80	68	0.93	30	145-175	0.00237	15
	QC90L4A	Aluminium	1.5	1.10	1400	7.40	7.50	4.9	2.95	1.90	69	0.90	40	145-175	0.00309	17
	QC90L4C	Aluminium	2.0	1.50	1400	10.70	10.31	5.3	2.85	1.60	69	0.90	50	145-175	0.00351	19
	QC100L4B	Aluminium	3.0	2.20	1415	14.20	15.30	3.0	1.90	1.80	76	0.94	75	145-175	0.00471	24

DIMENSION

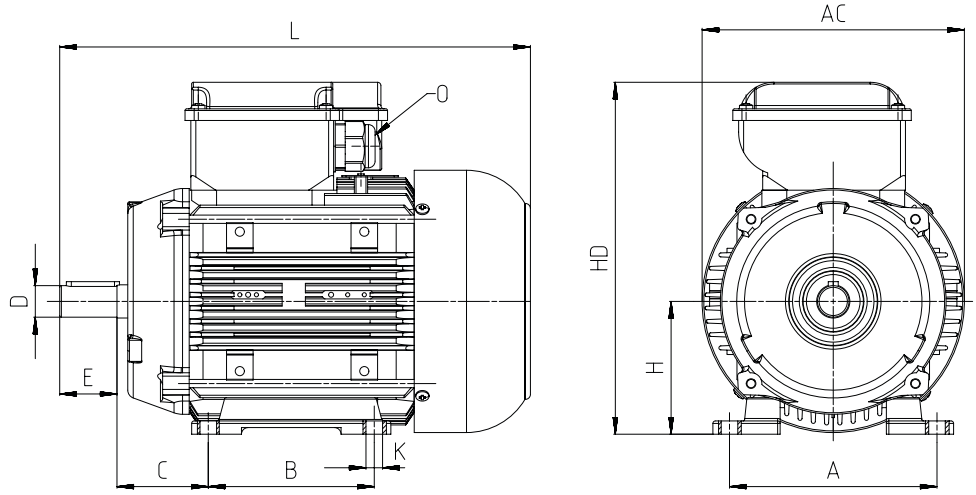

B3-B6-B7-B8-V5-V6

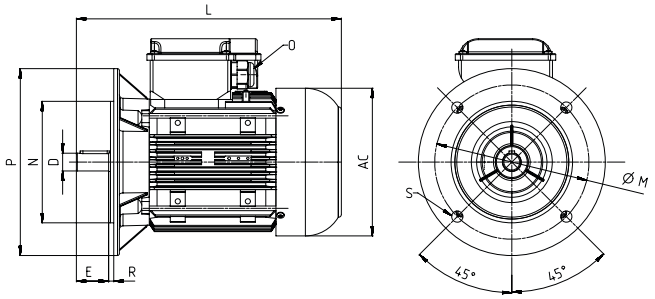

B14-V18-V19

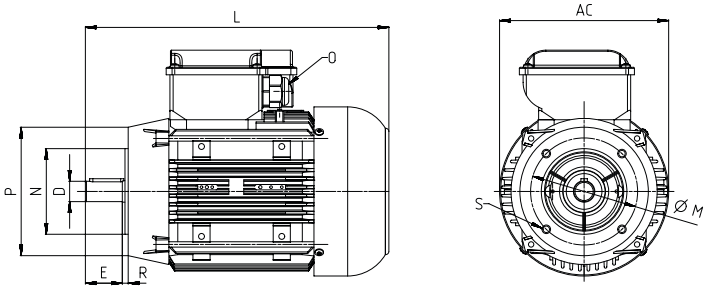

B5-V1-V3

			Main Dimensions			Foot Mounted Motors						Shaft				Bearing		Seal		Flange						
Frame Size	Housing Type	No. Of poles	AC	L	O	B	A	H	HD	K	C	D [1]	E	GA	F [2]	Drive Side	Non Drive Side	Drive Side	Non Drive Side	Mounting Type	Flange Type	P	N [3]	M	R	S
80 M	Aluminium	2...4	158	284	1*M20	100	125	80	215	10	50	19	40	21,5	6	6204-2Z	6204-2Z	20*30*7	20*30*7	B5	FA	200	130	165	0	12
																				B14	FB	160	110	130	0	M8
																				B14	FC	120	80	100	0	M6
S				297		100														B5	FA	200	130	165	0	12
90	Aluminium	2...4	193		1*M20		140	90	241	10	56	24	50	27,0	8	6305-2Z	6205-2Z	25*40*7	25*40*7	B14	FB	160	110	130	0	M8
L				317		125														B14	FC	140	95	115	0	M8
																				B5	FA	250	180	215	0	14.5
100 L	Aluminium	2...4	217	352	1*M25	140	160	100	241	12	63	28	60	31,0	8	6306-2Z	6205-2Z	30*47*7	25*40*7	B14	FB	200	130	165	0	M10
																				B14	FC	160	110	130	0	M8

Dimensions are in mm
(1) Tolerance DIN EN 50347 “j6”
(2) According to DIN 6885
(3) Tolerance DIN EN 50347 “j6”

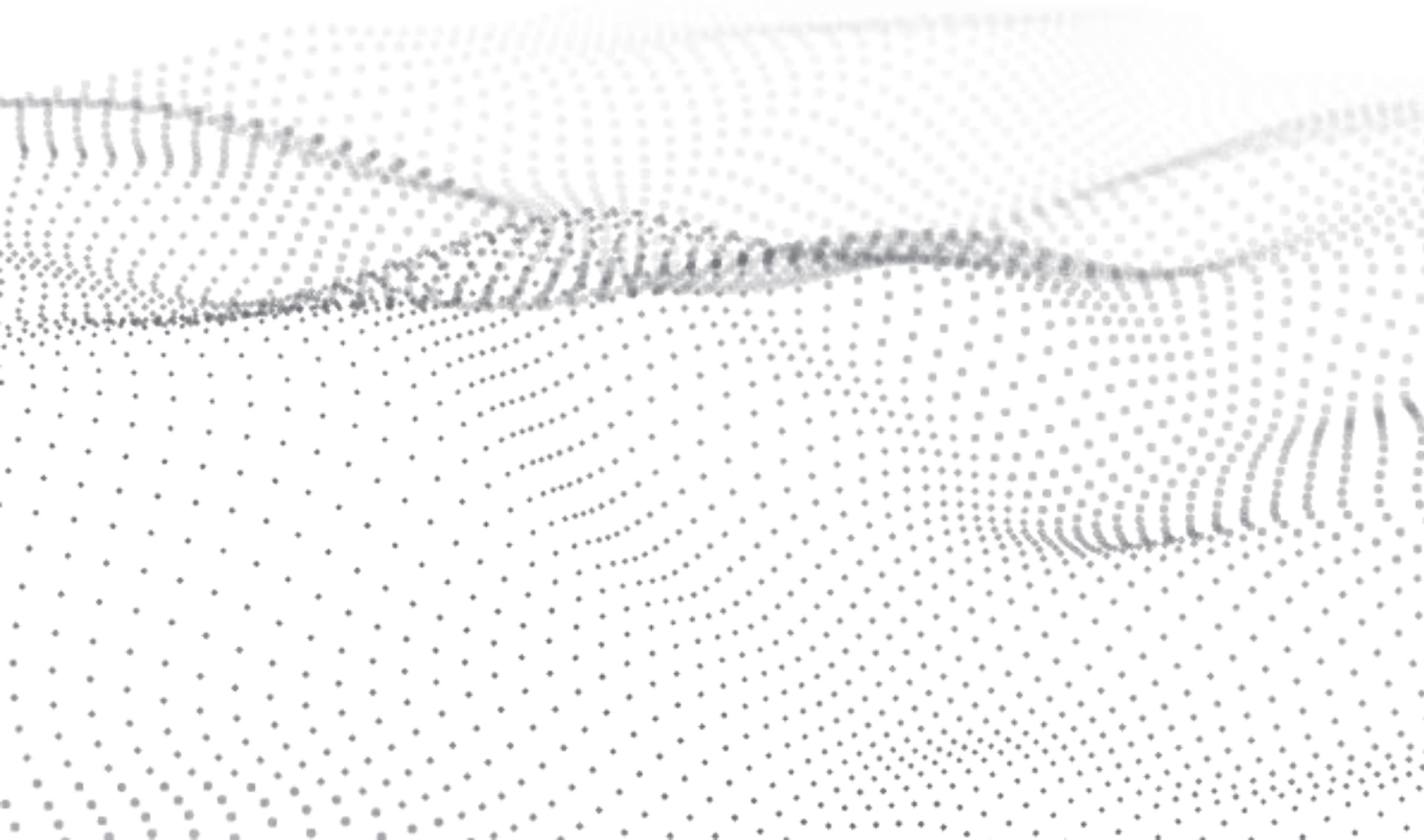

SPECIAL MOTORS

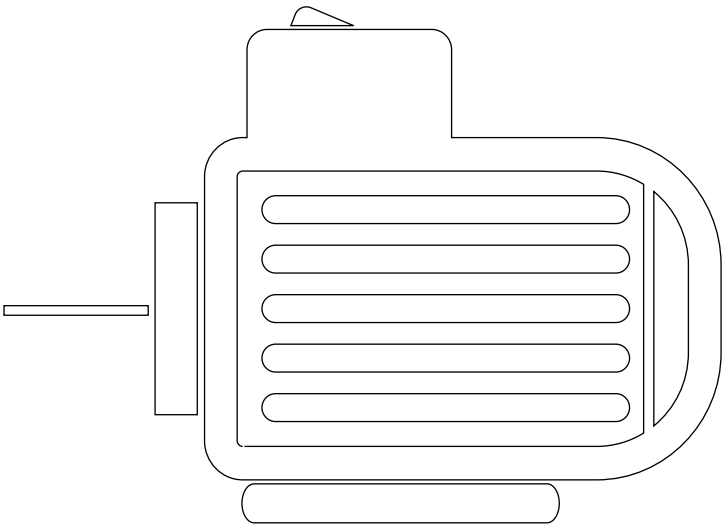

DOUBLE VOLTAGE MOTORS

9-lead motors with YY / Y connection and 12-lead motors with Δ/YY/Y connection. Generally designed for 230/460V 60Hz operating values, these motors address different mains voltage needs.

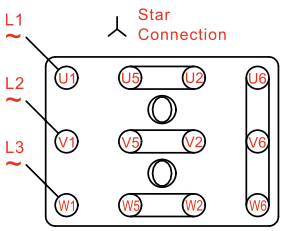

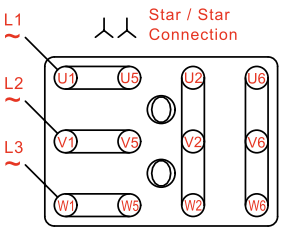

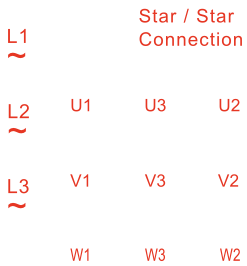

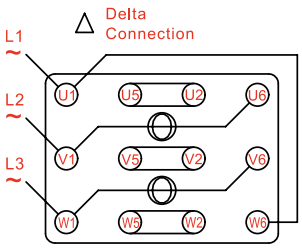

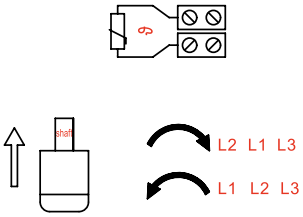

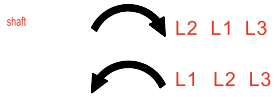

SEPARATE WINDING MOTORS

9-lead motors with YY / Y connection and 12-lead motors with Δ/YY/Y connection. Generally designed for 230/460V 60Hz operating values, these motors address different mains voltage needs.

Q1E112M2/12D 380V 50Hz 4.9/0.8kW 2900/385 d/d

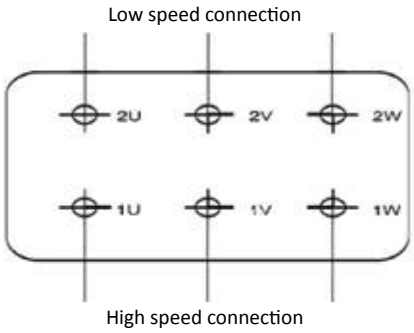

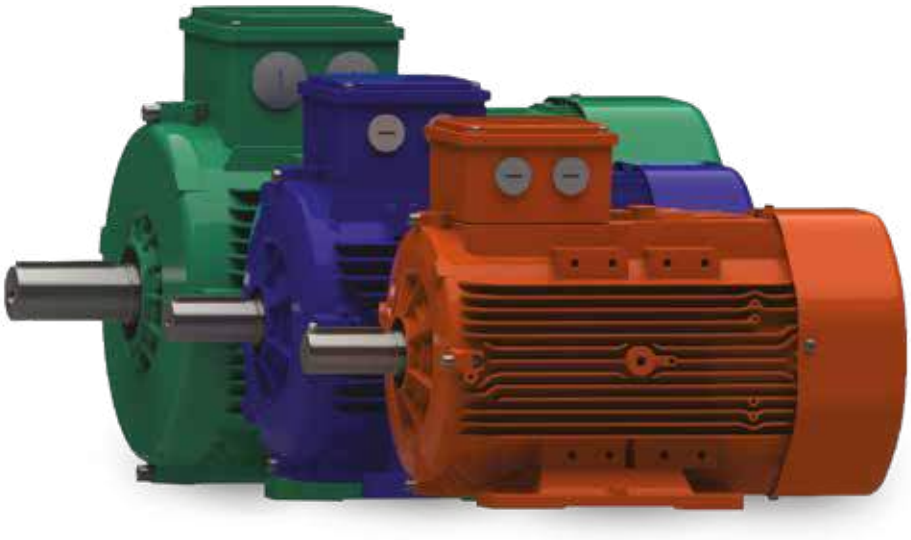

ANTI-CONDENSATION HEATER

Humidity, particularly on motor windings operating in humid environment, reduces insulation resistance and causes shorter motor life. In such applications, with the heaters placed on motor winding, the humidity of windings are removed before starting the motor.

H INSULATION CLASS MOTORS

Our standard motors have Class F insulation. However, we also manufacture motors with Class H insulation.

Ambient Temperature	Winding Temperature Rise Limit	Tolerance
40	125	15
180 °		

UL CERTIFIED MOTORS

We also manufacture UL certified motors upon request.

BUREU VERITAS CERTIFIED MOTORS

We also produce Bureu Veritas Certified marine motors upon request

SPECIAL VOLTAGE MOTORS

Different from standard voltages, we also manufacture motors in different voltage steps (290/500V, 330/570V etc) upon request.

SPECIAL FREQUENCY MOTORS

Different from standard frequencies, we also manufacture motors in different frequencies (32Hz, 87Hz etc) upon request.

SPECIAL BEARING MOTORS

We manufacture motors with bearings that suit to various temperature steps (150°C , 200°C etc) and axial-radial loads for different applications.

OTHER SPECIAL APPLICATIONS

- Special axle or double axle motors
- Special flange motors
- Fixed bearing motors
- Drain hole to remove condensation
- Use of thermic or thermistor to prevent motor winding temperature from rising above limit values
- Inverter duty motors

MOTOR PART LIST

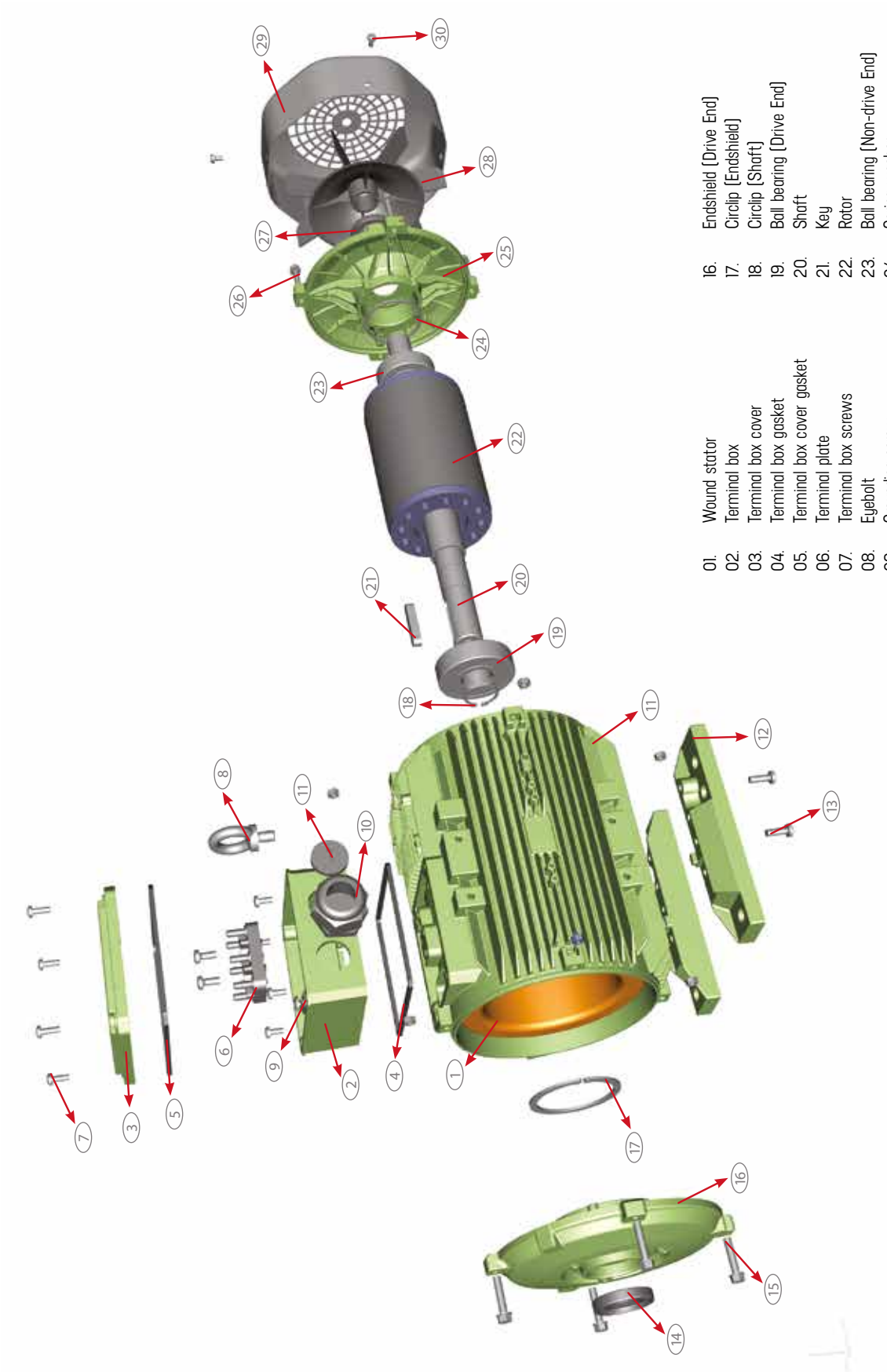

01. Wound stator
02. Terminal box
03. Terminal box cover
04. Terminal box gasket
05. Terminal box cover gasket
06. Terminal plate
07. Terminal box screws
08. Eyebolt
09. Grounding screw
10. Cable gland
11. Blind Plug
12. Foot
13. Foot screws
14. Seal [Drive End]
15. Endshield screws [Drive End]
16. Endshield [Drive End]
17. Circlip [Endshield]
18. Circlip [Shaft]
19. Ball bearing [Drive End]
20. Shaft
21. Key
22. Rotor
23. Ball bearing [Non-drive End]
24. Spring washer
25. Endshield [Non-drive End]
26. Endshield screws [Non-drive End]
27. Seal [Non-drive End]
28. Fan
29. Fan cover
30. Fan cover screws

WAT Motor Sanayi ve Ticaret A.Ş. reserves the right
to alter any data given in this catalogue.

WAT MOTOR SANAYİ ve TİCARET A.Ş.
KARAAĞAÇ MAHALLESİ 8. SOKAK NO: 4 A/2
KAPAKLI 59510 TEKİRDAĞ, TURKEY