TRANSTECNO®
the modular gearmotor

ITH

ITH

ITH Iron

Motoriduttori ad ingranaggi cilindrici
Helical in-line gearmotors

TRANSTECNO · GENUINE · PRODUCTS ·

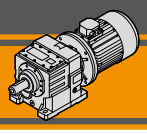

ENERGY SAVING

Indice	*Index*	Pag. *Page*
Caratteristiche tecniche	*Technical features*	**B2**
Versioni	*Versions*	**B2**
Designazione	*Classification*	**B3**
Sensi di rotazione	*Direction of rotation*	**B3**
Simbologia	*Symbols*	**B3**
Lubrificazione	*Lubrication*	**B4**
Carichi radiali in entrata	*Input radial loads*	**B6**
Carichi radiali in uscita	*Output radial loads*	**B6**
Dati tecnici	*Technical data*	**B7**
Dimensioni	*Dimensions*	**B20**
Accessori	*Accessories*	**B28**

Questa sezione annulla e sostituisce ogni precedente edizione o revisione. Qualora questa sezione non Vi sia giunta in distribuzione controllata, l'aggiornamento dei dati ivi contenuto non è assicurato. **In tal caso la versione più aggiornata è disponibile sul nostro sito internet www.transtecno.com**

This section replaces any previous edition and revision. If you obtained this catalogue other than through controlled distribution channels, the most up to date content is not guaranteed. ***In this case the latest version is available on our web site www.transtecno.com***

Caratteristiche tecniche

I motoriduttori della serie ITH sono dedicati ad applicazioni industriali che presentano carichi particolarmente gravosi. La costruzione robusta con carcassa in ghisa e l'elevata modularità dei diversi kit di entrata e di uscita li rendono adatti ad ogni tipo di applicazione.

Caratteristiche comuni a tutta la serie sono:

- Costruzione robusta con carcassa in ghisa;
- Elevata modularità;
- Lubrificazione con olio sintetico;
- Accoppiamento al motore tramite giunto elastico.
- Verniciatura a polvere epossidica RAL 7016 di spessore medio 0,10 – 0,15 mm.

Technical features

The ITH gearmotors are intended for heavy duty applications. The robust one pieces casing of the main housing and the modular design of input and output sets increase application fexibility.

The main features of ITH range are:

- *Robust cast iron housings;*
- *High degree of modularity;*
- *Lubrication with synthetic oil;*
- *Coupled to motor with flexible coupling.*
- *Epoxy powder coating RAL 7016 average thickness 0,10 – 0,15 mm.*

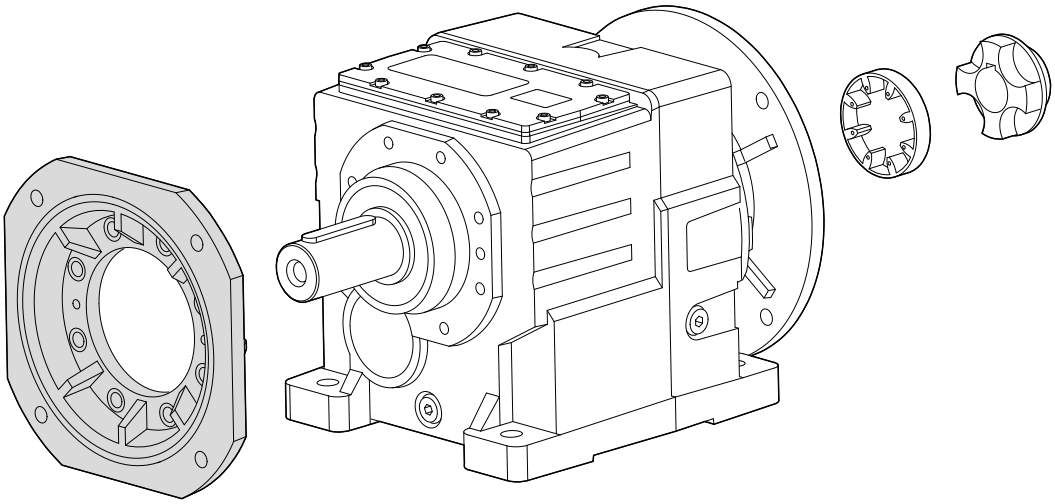

Versioni

Versions

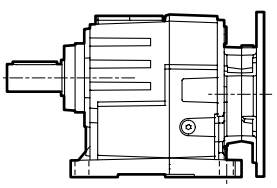

U

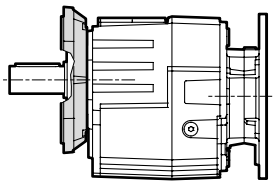

F...

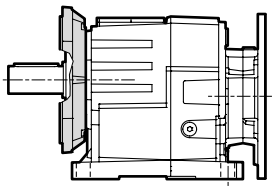

U/F...

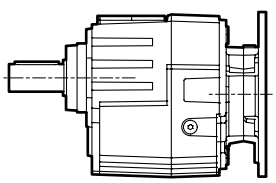

G

RIDUTTORE / *GEARBOX*

ITH	12	2	H	26.28	D40	132	B5	M1	CW
Tipo *Type*	Grandezza *Size*	Stadi *Stages*	Versione *Version*	Rapporto *Ratio*	Albero uscita *Output shaft*	IEC	Forma costruttiva *Version*	Pos. di montaggio *Mounting position*	Dispositivo antiretro *Backstop device*
ITH 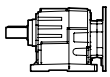	**11** **12** **13** **14**	**2** **3**	**U** **F...** **U/F...** **G**	vedi tabelle *see tables*	vedi tabelle *see tables*	**71..** **—** **200..**	**B5** **B14**	**M1 (B3)** **M2 (V6)** **M3 (B8)** **M4 (V5)** **M5 (B7)** **M6 (B6)**	**CW** **CCW**

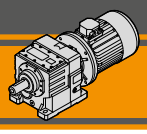

Designazione — *Classification*

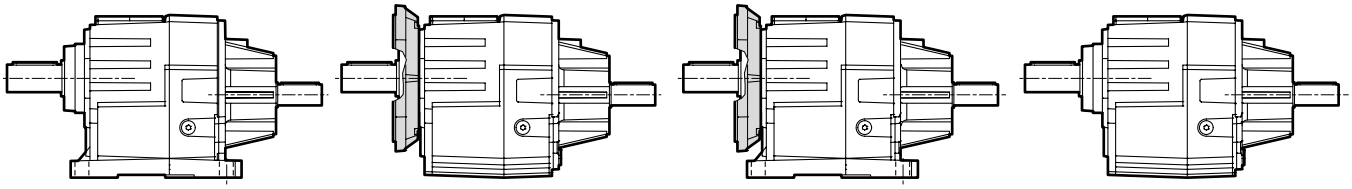

U | F... | U/F... | G

RIDUTTORE / *GEARBOX*

ITHIS	12	2	H	26.28	D40	M1
Tipo *Type*	Grandezza *Size*	Stadi *Stages*	Versione *Version*	Rapporto *Ratio*	Albero uscita *Output shaft*	Pos. di montaggio *Mounting position*
ITHIS 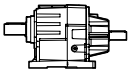	**11** **12** **13** **14**	**2** **3**	**U** **F...** **U/F...** **G**	vedi tabelle *see tables*	vedi tabelle *see tables*	**M1 (B3)** **M2 (V6)** **M3 (B8)** **M4 (V5)** **M5 (B7)** **M6 (B6)**

MOTORE / *MOTOR*

5.5kW	4p	3ph	230/400V	50Hz	T1
Potenza *Power*	Poli *Poles*	Fasi *Phases*	Tensione *Voltage*	Frequenza *Frequency*	Pos. morsettiera *Terminal box pos.*
vedi tabelle *see tables*	**2p** **4p** **6p** **8p**	**1ph** **3ph**	**230/400V** **220/380V** **...** **230V**	**50Hz** **60Hz**	**T1** (Std) **T4** 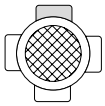 **T2** **T3**

Sensi di rotazione — *Direction of rotation*

ITH...2

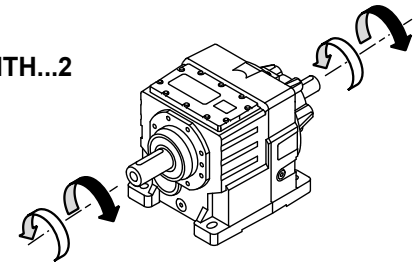

ITH...3

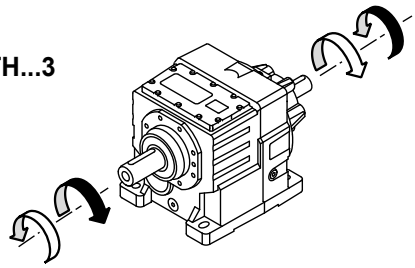

Simbologia — *Symbols*

n_1	[min^{-1}]	Velocità in ingresso / *Input speed*
n_2	[min^{-1}]	Velocità in uscita / *Output speed*
i		Rapporto di riduzione / *Ratio*
P_1	[kW]	Potenza in entrata / *Input power*
M_2	[Nm]	Coppia nominale in uscita in funzione di P_1 / *Output torque referred to P_1*
Pn_1	[kW]	Potenza nominale in entrata / *Nominal input power*
Mn_2	[Nm]	Coppia nominale in uscita in funzione di Pn_1 / *Nominal output torque referred to Pn_1*
sf		Fattore di servizio / *Service factor*
R_1	[N]	Carico radiale ammissibile in entrata / *Permitted input radial load*
A_1	[N]	Carico assiale ammissibile in entrata / *Permitted input axial load*
R_2	[N]	Carico radiale ammissibile in uscita / *Permitted output radial load*
A_2	[N]	Carico assiale ammissibile in uscita / *Permitted output axial load*

Lubrificazione

Lubrication

I motoriduttori della serie ITH sono forniti completi di lubrificante sintetico viscosità 320. La quantità di lubrificante dipende dalla posizione di montaggio.

ITH series gearmotors come complete with synthetic lubricant 320 viscosity. The lubricant quantity depends on mounting position.

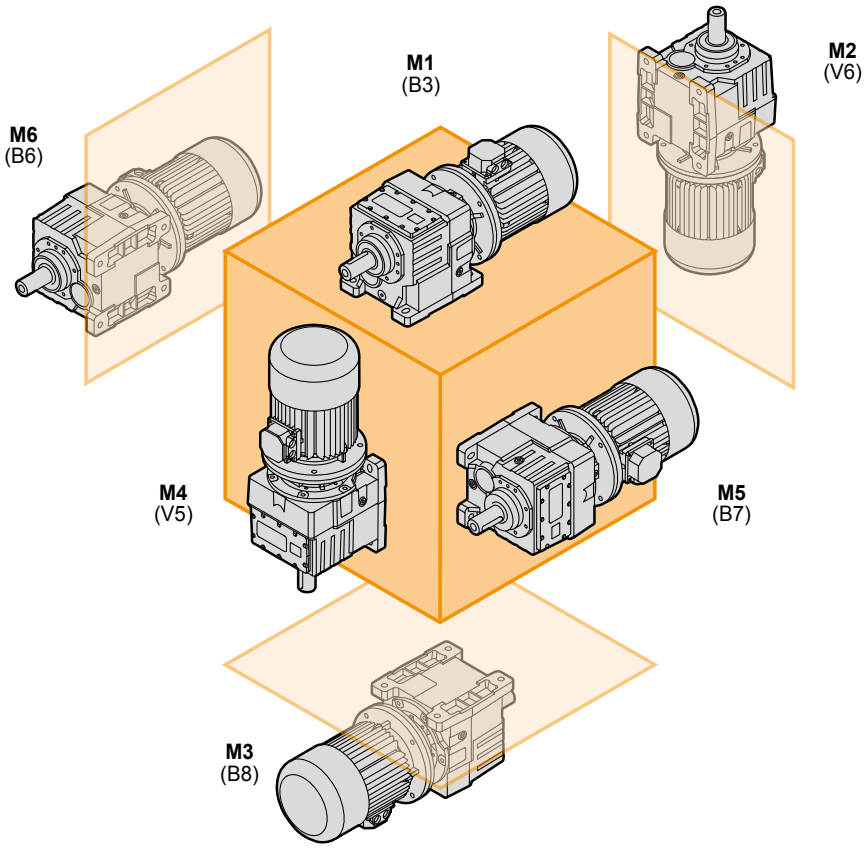

ITH	Quantità di olio (litri) / *Oil quantity (litres)*					
	M1 (B3)	**M2** (V6)	**M3** (B8)	**M4** (V5)	**M5** (B7)	**M6** (B6)
112 **113**	1,1	3,9	3,7	3,4	2,4	2,4
122 **123**	1,7	5,0	4,3	4,3	3,1	2,9
132 **133**	4,5	9,5	8,3	8,6	5,9	5,7
142 **143**	8,1	14,5	11,5	14,4	9,4	9,0

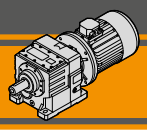

Lubrificazione

Lubrication

ITHIS	**Quantità di olio** (litri) / ***Oil quantity*** *(litres)*					
	M1 (B3)	**M2** (V6)	**M3** (B8)	**M4** (V5)	**M5** (B7)	**M6** (B6)
112 **113**	1,3	4,3	3,9	3,4	2,6	2,6
122 **123**	1,9	5,4	4,5	4,3	3,3	3,1
132	3,7	10,2	8,7	8,6	6,3	6,1
133	3,5	9,9	8,5		6,1	5,9
142	7,3	15,2	11,9	14,4	9,8	9,4
143	7,1	14,9	11,7		9,6	9,2

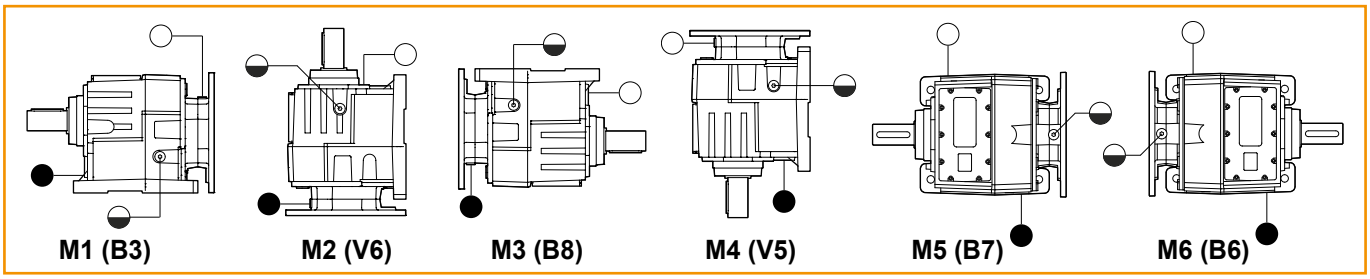

○ Sfiato e tappo di riempimento / *Breather and filling plug*
◒ Livello olio / *Oil level plug*
● Tappo di scarico / *Oil drain plug*

Carichi radiali in entrata — *Input Radial loads*

ITH 113	n_1 [min^{-1}]	Potenza motore/ *Motor Power [kW]*		
		1.1	1.5	1.85
R_1 [N]	1400	1250		
	900	1500		500
	500	1750	-	-

ITH 112 ITH 122 -123 ITH 133 - 143	n_1 [min^{-1}]	Potenza motore/ *Motor Power [kW]*			
		2.2	3.0	4.0	5.5
R_1 [N]	1400	1800			750
	900	2100		1200	-
	500	2500	-	-	-

ITH 132 ITH 142	n_1 [min^{-1}]	Potenza motore/ *Motor Power [kW]*					
		5.5	7.5	9.2	11.0	15.0	18.5
R_1 [N]	1400	3700				2800	1200
	900	4900			3300	650	-
	500	5250	3900	1300	-	-	-

I carichi radiali uscita massimi applicabili sono riportati nelle tabelle precedenti.
Quando il carico radiale risultante non è applicato sulla mezzeria dell'albero occorre calcolare quello effettivo con la seguente formula:

The radial loads maximum output applicable are indicated in the previous tables.
When the resulting radial load is not applied on the centre line of the shaft it is necessary to calculate the effective load with the following formula:

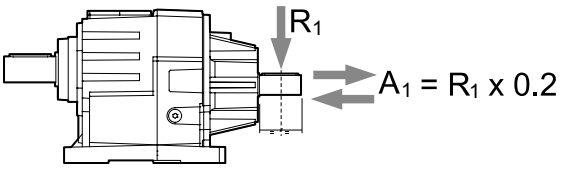

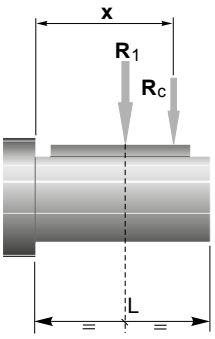

	ITH 112	ITH 113	ITH 122	ITH 123	ITH 132	ITH 133	ITH 142	ITH 143
a	139	134	139		157	139	157	139
b	110	110	110		118	110	118	110

$$R_c = \frac{R_1 \cdot a}{(b+x)} \leq R_1$$

$$R \leq R_c$$

a, b = valori riportati nella tabella
a, b = values given in the table

Carichi radiali in uscita — *Output Radial loads*

I carichi radiali uscita massimi applicabili sono riportati nelle tabelle dati tecnici.
Quando il carico radiale risultante non è applicato sulla mezzeria dell'albero occorre calcolare quello effettivo con la seguente formula:

The radial loads maximum output applicable are indicated in the technical data table.
When the resulting radial load is not applied on the centre line of the shaft it is necessary to calculate the effective load with the following formula:

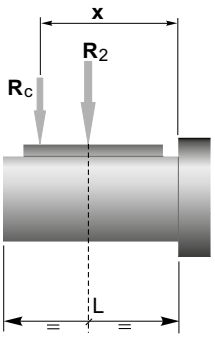

	ITH 112	ITH 113	ITH 122	ITH 123	ITH 132	ITH 133	ITH 142	ITH 143
a	184		208		247		286	
b	149		168		197		226	
R_{2MAX}	8200		12500		18500		22500	

$$R_c = \frac{R_2 \cdot a}{(b+x)} \leq R_{2MAX}$$

$$R \leq R_c$$

a, b = valori riportati nella tabella
a, b = values given in the table

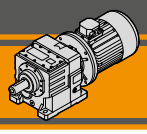

Dati tecnici — n_1 1400 min^{-1} — *Technical data*

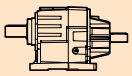

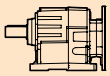

IEC Motori applicabili
IEC Motor adapters

ITHIS 112	n_2 [min^{-1}]	Mn_2 [Nm]	Pn_1 [kW]	i	R_2 [N]	ITH 112 71 B5	80 B5	90 B5/B14	100 B5/B14	112 B5/B14	132 B5/B14
	261	350	9.94	5.38	3437						
	216	350	8.26	6.47	3829						
	178	400	7.76	7.88	4111						
	164	400	7.15	8.54	4311						
	155	420	7.08	9.06	4381						
	136	420	6.24	10.28	4717						
	123	480	6.43	11.39	4734						
	112	480	5.86	12.52	5001						
	95	500	5.16	14.80	5408						
	77	530	4.47	18.10	5903						*
	69	530	4.00	20.25	6302						
	60	600	3.90	23.52	6389						
	54	600	3.50	26.16	6798					*	
	49	650	3.45	28.77	6794					*	
	44	680	3.23	32.18	7003					*	
	39	680	2.86	36.35	7519					*	
	34	680	2.50	41.57	8130					*	
	29	600	1.90	48.27	8200				*	*	
	25	600	1.60	57.21	8200				*	*	

ITHIS 113	n_2 [min^{-1}]	Mn_2 [Nm]	Pn_1 [kW]	i	R_2 [N]	ITH 113 71 B5	80 B5	90 B5/B14
	25	700	1.98	55.27	8200			
	21	700	1.61	67.61	8200			
	19	700	1.46	74.96	8200			
	15	700	1.19	91.70	8200			
	13	700	1.00	108.91	8200			
	10	700	0.80	136.65	8200			*
	8.5	700	0.67	163.98	8200			*
	8.1	700	0.63	173.44	8200			*
	7.6	700	0.59	185.20	8200			*
	6.9	700	0.54	201.58	8200			*
	6.6	700	0.51	212.17	8200			*
	6.2	700	0.48	226.55	8200		*	*
	5.7	700	0.44	246.59	8200		*	*

N.B.
Le aree evidenziate indicano l'applicabilità della corrispondente grandezza motore.

N.B.
Highlighted areas indicate motor inputs available on each size of unit.

*** =** Il fattore di servizio (**sf**) deve essere scelto in funzione dell'applicazione: si prega di contattare il nostro Servizio Tecnico.

**** =*** *The service factor (**sf**) has to be selected depending on application: please contact our Technical Department.*

Prima di eseguire la scelta del motoriduttore riferirsi alle prestazioni elencate nelle tabelle dalla pag. B11 alla pag. B19.

Before selecting any gearbox, please read the performance values shown in the tables on page B11 to B19.

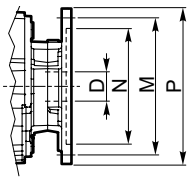

Dimensioni IEC / *IEC Dimensions*	71 B5	80 B5	90 B5	90 B14	100/112 B5	100/112 B14	132 B5	132 B14
N	110	130	130	95	180	110	230	130
M	130	165	165	115	215	130	265	165
P	160	200	200	140	250	160	300	200
D	14	19	24		28		38	

Dati tecnici — n_1 1400 min^{-1} — *Technical data*

n_2 [min^{-1}]	Mn_2 [Nm]	Pn_1 [kW]	i	R_2 [N]	IEC Motori applicabili / *IEC Motor adapters*				
ITHIS 122					**ITH 122**				
					80 B5	**90 B5/B14**	**100 B5/B14**	**112 B5/B14**	**132 B5/B14**
271	550	16.25	5.17	4751					
209	550	12.56	6.69	5522					
180	600	11.76	7.79	5878					
159	650	11.25	8.82	6149					
139	750	11.36	10.08	6278					
123	750	10.09	11.35	6727					
105	850	9.76	13.30	6946					
88	850	8.15	15.92	7713					
82	850	7.59	17.11	8045					
72	850	6.66	19.50	8683					
65	900	6.41	21.43	8887					
58	980	6.24	24.00	9005					
53	980	5.70	26.28	9494					
48	980	5.09	29.40	10136					
43	980	4.63	32.31	10710					*
40	980	4.22	35.47	11309					*
34	980	3.58	41.78	12500					
31	980	3.27	45.73	12500				*	
28	980	2.97	50.40	12500				*	
ITHIS 123					**ITH 123**				
					71 B5	**80 B5**	**90 B5/B14**	**100 B5/B14**	**112 B5/B14**
25	980	2.73	56.00	12500					*
23	980	2.49	61.31	12500					*
20	980	2.17	70.53	12500					*
17	980	1.89	81.00	12500				*	*
16	980	1.72	88.68	12500				*	*
13	980	1.45	105.23	12500				*	*
12	980	1.33	115.21	12500				*	*
11	980	1.19	128.73	12500				*	*
9.7	980	1.06	144.00	12500				*	*
8.9	980	0.97	157.66	12500				*	*
7.9	980	0.86	178.10	12500			*	*	*
6.9	980	0.75	203.65	12500			*	*	*
6.5	980	0.71	216.00	12500			*	*	*
5.9	980	0.65	236.49	12500			*	*	*
5.5	980	0.60	256.00	12500			*	*	*
5.0	980	0.55	280.29	12500			*	*	*

N.B.
Le aree evidenziate indicano l'applicabilità della corrispondente grandezza motore.

*** =** Il fattore di servizio (**sf**) deve essere scelto in funzione dell'applicazione: si prega di contattare il nostro Servizio Tecnico.

Prima di eseguire la scelta del motoriduttore riferirsi alle prestazioni elencate nelle tabelle dalla pag. B11 alla pag. B19.

N.B.
Highlighted areas indicate motor inputs available on each size of unit.

**** =** The service factor (**sf**) has to be selected depending on application: please contact our Technical Department.*

Before selecting any gearbox, please read the performance values shown in the tables on page B11 to B19.

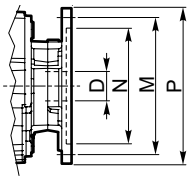

Dimensioni IEC / *IEC Dimensions*								
	71 B5	**80 B5**	**90 B5**	**90 B14**	**100/112 B5**	**100/112 B14**	**132 B5**	**132 B14**
N	110	130	130	95	180	110	230	130
M	130	165	165	115	215	130	265	165
P	160	200	200	140	250	160	300	200
D	14	19	24		28		38	

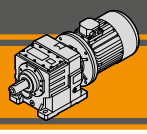

Dati tecnici — n_1 1400 min^{-1} — *Technical data*

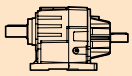

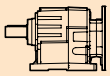

	n_2 [min^{-1}]	Mn_2 [Nm]	Pn_1 [kW]	i	R_2 [N]	IEC Motori applicabili / *IEC Motor adapters*						
ITHIS 132						**ITH 132**						
						80 B5	**90 B5/B14**	**100 B5/B14**	**112 B5/B14**	**132 B5/B14**	**160 B5**	**180 B5**
	278	850	25.8	5.03	10319							
	230	850	21.3	6.09	11532							
	203	900	19.9	6.91	12142							
	186	900	18.3	7.51	12746	*	*	*	*			
	167	900	16.4	8.36	13570							*
	155	900	15.2	9.03	14195							*
	136	950	14.1	10.30	14992							*
	127	950	13.2	11.01	15581							*
	113	1200	14.8	12.39	14811							*
	95	1200	12.4	14.80	16426							*
	93	1300	13.1	15.11	15778							*
	75	1500	12.3	18.69	15950							*
	69	1600	12.0	20.31	15734							*
	55	1600	9.5	25.65	18031						*	*
	51	1700	9.4	27.48	17571							
	46	1700	8.5	30.46	18500							
	40	1900	8.4	34.61	17356						*	*
	37	1900	7.7	37.71	18247							
	33	1900	6.9	41.80	18500							
	31	1900	6.4	45.60	18500							
	28	1900	5.8	49.88	18500							
ITHIS 133						**ITH 133**						
						80 B5	**90 B5/B14**	**100 B5/B14**	**112 B5/B14**	**132 B5/B14**		
	23	1900	4.9	60.92	18500					*		
	22	1900	4.6	64.74	18500					*		
	19.8	1900	4.2	70.88	18500					*		
	17.9	1900	3.8	78.38	18500					*		
	16.1	1900	3.4	87.14	18500				*	*		
	14.6	1900	3.1	95.67	18500				*	*		
	12.7	1900	2.7	109.93	18500				*	*		
	11.6	1900	2.5	120.36	18500				*	*		
	10.4	1900	2.2	134.66	18500				*	*		
	9.5	1900	2.0	147.98	18500			*	*	*		
	8.6	1900	1.8	162.45	18500			*	*	*		
	7.3	1900	1.5	191.39	18500			*	*			
	6.7	1900	1.4	209.48	18500			*	*			
	6.1	1900	1.3	230.85	18500			*	*			

N.B.
Le aree evidenziate indicano l'applicabilità della corrispondente grandezza motore.

*** =** Il fattore di servizio (**sf**) deve essere scelto in funzione dell'applicazione: si prega di contattare il nostro Servizio Tecnico.

Prima di eseguire la scelta del motoriduttore riferirsi alle prestazioni elencate nelle tabelle dalla pag. B11 alla pag. B19.

N.B.
Highlighted areas indicate motor inputs available on each size of unit.

**** =** The service factor (**sf**) has to be selected depending on application: please contact our Technical Department.*

Before selecting any gearbox, please read the performance values shown in the tables on page B11 to B19.

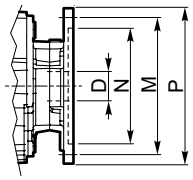

Dimensioni IEC / *IEC Dimensions*

	80 B5	90 B5	90 B14	100/112 B5	100/112 B14	132 B5	132 B14	160 B5	180 B5
N	130	130	95	180	110	230	130	250	250
M	165	165	115	215	130	265	165	300	300
P	200	200	140	250	160	300	200	350	350
D	19	24		28		38		42	48

Dati tecnici — n_1 1400 min^{-1} — *Technical data*

n_2 [min^{-1}]	Mn_2 [Nm]	Pn_1 [kW]	i	R_2 [N]	IEC Motori applicabili / *IEC Motor adapters*					
ITHIS 142					**ITH 142**					
					100 B5/B14	**112 B5/B14**	**132 B5/B14**	**160 B5**	**180 B5**	**200 B5**
228	1800	44.68	6.15	14955						
190	1800	37.40	7.35	16494						
158	2000	34.38	8.88	17248	*	*				
144	2000	31.34	9.75	18150						
135	2100	30.99	10.35	18181	*	*				
120	2100	27.54	11.65	19402						
110	2200	26.30	12.78	19769						*
99	2300	24.95	14.08	20171						*
85	2300	21.42	16.40	21936						*
79	2800	24.11	17.73	19026						*
69	2800	21.12	20.24	20463						*
54	3200	18.80	25.99	19654						*
50	3200	17.39	28.10	20514					*	*
43	3200	15.11	32.35	22168					*	*
38	3200	13.18	37.09	22500					*	*
32	3200	11.22	43.57	22500					*	*
30	3200	10.32	47.35	22500						
27	3200	9.44	51.76	22500						

ITHIS 143					**ITH 143**				
					80 B5	**90 B5/B14**	**100 B5/B14**	**112 B5/B14**	**132 B5/B14**
23	3500	8.84	61.74	22500					
21	3500	8.18	66.73	22500					
18	3500	6.87	79.43	22500					
16	3500	6.36	85.85	22500					
13	3500	4.90	111.40	22500					*
12	3500	4.53	120.42	22500					*
11	3500	4.14	131.84	22500					*
9.5	3500	3.70	147.51	22500					*
8.6	3500	3.37	162.10	22500					*
7.9	3500	3.07	177.95	22500					*
7.2	3500	2.81	193.96	22500					
6.7	3500	2.64	209.65	22500					
6.1	3500	2.38	229.46	22500					
5.5	3500	2.16	252.87	22500					

N.B.
Le aree evidenziate indicano l'applicabilità della corrispondente grandezza motore.

* = Il fattore di servizio (**sf**) deve essere scelto in funzione dell'applicazione: si prega di contattare il nostro Servizio Tecnico.

Prima di eseguire la scelta del motoriduttore riferirsi alle prestazioni elencate nelle tabelle dalla pag. B11 alla pag. B19.

N.B.
Highlighted areas indicate motor inputs available on each size of unit.

* = *The service factor (**sf**) has to be selected depending on application: please contact our Technical Department.*

Before selecting any gearbox, please read the performance values shown in the tables on page B11 to B19.

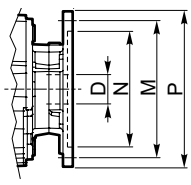

Dimensioni IEC / *IEC Dimensions*										
	80 B5	**90 B5**	**90 B14**	**100/112 B5**	**100/112 B14**	**132 B5**	**132 B14**	**160 B5**	**180 B5**	**200 B5**
N	130	130	95	180	110	230	130	250	250	300
M	165	165	115	215	130	265	165	300	300	350
P	200	200	140	250	160	300	200	350	350	400
D	19	24		28		38		42	48	55

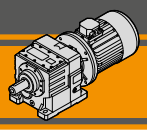

Dati tecnici

Technical data

P_1 [kW]	n_2 [min^{-1}]	M_2 [Nm]	sf	i		IEC	R_2 [N]
0.25							
71A4 (1400 min^{-1})	**54**	43	14	26.16	**ITH112**	**B5**	8200
	39	60	11	36.35		**B5**	8200
	34	68	10	41.57		**B5**	8200
	29	79	7.6	48.27		**B5**	8200
	24	94	6.4	57.21		**B5**	8200
	25	89	7.9	55.27	**ITH113**	**B5**	8200
	21	108	6.5	67.61		**B5**	8200
	19	120	5.8	74.96		**B5**	8200
	15	147	4.8	91.70		**B5**	8200
	13	175	4.0	108.91		**B5**	8200
	10	219	3.2	136.65		**B5**	8200
	8.5	263	2.7	163.98		**B5**	8200
	8.1	278	2.5	173.44		**B5**	8200
	7.6	297	2.4	185.20		**B5**	8200
	6.9	323	2.2	201.58		**B5**	8200
	6.6	340	2.1	212.17		**B5**	8200
	6.2	363	1.9	226.55		**B5**	8200
	5.7	395	1.8	246.59		**B5**	8200
	7.9	285	3.4	178.10	**ITH123**	**B5**	12500
	6.9	326	3.0	203.65		**B5**	12500
	6.5	346	2.8	216.00		**B5**	12500
	5.9	379	2.6	236.49		**B5**	12500
	5.5	410	2.4	256.00		**B5**	12500
	5.0	449	2.2	280.29		**B5**	12500
0.37							
71B4 (1400 min^{-1})	**54**	63	9.5	26.16	**ITH112**	**B5**	8200
	39	88	7.7	36.35		**B5**	8200
	34	101	6.8	41.57		**B5**	8200
	29	117	5.1	48.27		**B5**	8200
	24	139	4.3	57.21		**B5**	8200
	25	131	5.3	55.27	**ITH113**	**B5**	8200
	21	160	4.4	67.61		**B5**	8200
	19	178	3.9	74.96		**B5**	8200
	15	218	3.2	91.70		**B5**	8200
	13	258	2.7	108.91		**B5**	8200
	10	324	2.2	136.65		**B5**	8200
	8.5	389	1.8	163.98		**B5**	8200
	8.1	411	1.7	173.44		**B5**	8200
	7.6	439	1.6	185.20		**B5**	8200
	6.9	478	1.5	201.58		**B5**	8200
	6.6	503	1.4	212.17		**B5**	8200
	6.2	537	1.3	226.55		**B5**	8200
	5.7	585	1.2	246.59		**B5**	8200
	7.9	423	2.3	178.10	**ITH123**	**B5**	12500
	6.9	483	2.0	203.65		**B5**	12500
	6.5	512	1.9	216.00		**B5**	12500
	5.9	561	1.7	236.49		**B5**	12500
	5.5	607	1.6	256.00		**B5**	12500
	5.0	665	1.5	280.29		**B5**	12500

P_1 [kW]	n_2 [min^{-1}]	M_2 [Nm]	sf	i		IEC	R_2 [N]
0.55							
80A4 (1400 min^{-1})	**260**	19	18	5.38	**ITH112**	**B5**	4411
	216	23	15	6.47		**B5**	4901
	178	28	14	7.88		**B5**	5479
	164	31	13	8.54		**B5**	5736
	155	33	13	9.06		**B5**	5928
	136	37	11	10.28		**B5**	6363
	123	41	12	11.39		**B5**	6737
	112	45	11	12.52		**B5**	7098
	95	53	9.4	14.80		**B5**	7783
	77	65	8.1	18.10		**B5**	8200
	69	73	7.3	20.25		**B5**	8200
	60	85	7.1	23.52		**B5**	8200
	54	94	6.4	26.16		**B5**	8200
	49	104	6.3	28.77		**B5**	8200
	44	116	5.9	32.18		**B5**	8200
	39	131	5.2	36.35		**B5**	8200
	34	150	4.5	41.57		**B5**	8200
	29	174	3.5	48.27		**B5**	8200
	24	206	2.9	57.21		**B5**	8200
	25	195	3.6	55.27	**ITH113**	**B5**	8200
	21	238	2.9	67.61		**B5**	8200
	19	264	2.6	74.96		**B5**	8200
	15	323	2.2	91.70		**B5**	8200
	13	384	1.8	108.91		**B5**	8200
	10	482	1.5	136.65		**B5**	8200
	8.5	578	1.2	163.98		**B5**	8200
	8.1	612	1.1	173.44		**B5**	8200
	7.6	653	1.1	185.20		**B5**	8200
	6.9	711	1.0	201.58		**B5**	8200
	6.6	748	0.9	212.17		**B5**	8200
	53	95	10	26.28	**ITH122**	**B5**	12500
	48	106	9.3	29.40		**B5**	12500
	43	116	8.4	32.31		**B5**	12500
	39	128	7.7	35.47		**B5**	12500
	34	150	6.5	41.78		**B5**	12500
	31	165	5.9	45.73		**B5**	12500
	28	182	5.4	50.40		**B5**	12500
	25	197	5.0	56.00	**ITH123**	**B5**	12500
	23	216	4.5	61.31		**B5**	12500
	20	249	3.9	70.53		**B5**	12500
	17	286	3.4	81.00		**B5**	12500
	16	313	3.1	88.68		**B5**	12500
	13	371	2.6	105.23		**B5**	12500
	12	406	2.4	115.21		**B5**	12500
	11	454	2.2	128.73		**B5**	12500
	9.7	508	1.9	144.00		**B5**	12500
	8.9	556	1.8	157.66		**B5**	12500
	7.9	628	1.6	178.10		**B5**	12500
	6.9	718	1.4	203.65		**B5**	12500
	6.5	762	1.3	216.00		**B5**	12500
	5.9	834	1.2	236.49		**B5**	12500
	5.5	903	1.1	256.00		**B5**	12500
	5.0	988	1.0	280.29		**B5**	12500

Dati tecnici

Technical data

P_1 [kW]	n_2 [min^{-1}]	M_2 [Nm]	sf	i		IEC	R_2 [N]
0.55							
80A4 (1400 min^{-1})	**23**	215	8.8	60.92	**ITH133**	**B5**	18500
	22	228	8.3	64.74		**B5**	18500
	20	250	7.6	70.88		**B5**	18500
	18	276	6.9	78.38		**B5**	18500
	16	307	6.2	87.14		**B5**	18500
	15	337	5.6	95.67		**B5**	18500
	13	388	4.9	109.93		**B5**	18500
	12	424	4.5	120.36		**B5**	18500
	10	475	4.0	134.66		**B5**	18500
	9.5	522	3.6	147.98		**B5**	18500
	8.6	573	3.3	162.45		**B5**	18500
	7.3	675	2.8	191.39		**B5**	18500
	6.7	739	2.6	209.48		**B5**	18500
	6.1	814	2.3	230.85		**B5**	18500
	13	393	8.9	111.40	**ITH143**	**B5**	22500
	12	425	8.2	120.42		**B5**	22500
	11	465	7.5	131.84		**B5**	22500
	9.5	520	6.7	147.51		**B5**	22500
	8.6	572	6.1	162.10		**B5**	22500
	7.9	628	5.6	177.95		**B5**	22500
	7.2	684	5.1	193.96		**B5**	22500
	6.1	809	4.3	229.46		**B5**	22500
	5.5	892	3.9	252.87		**B5**	22500
0.75							
80B4 (1400 min^{-1})	**260**	26	13	5.38	**ITH112**	**B5**	4390
	216	32	11	6.47		**B5**	4874
	178	39	10	7.88		**B5**	5441
	164	42	9.5	8.54		**B5**	5693
	155	44	9.4	9.06		**B5**	5881
	136	50	8.3	10.28		**B5**	6305
	123	56	8.6	11.39		**B5**	6669
	112	61	7.8	12.52		**B5**	7019
	95	73	6.9	14.80		**B5**	7680
	77	89	6.0	18.10		**B5**	8200
	69	99	5.3	20.25		**B5**	8200
	60	116	5.2	23.52		**B5**	8200
	54	128	4.7	26.16		**B5**	8200
	49	141	4.6	28.77		**B5**	8200
	44	158	4.3	32.18		**B5**	8200
	39	179	3.8	36.35		**B5**	8200
	34	204	3.3	41.57		**B5**	8200
	29	237	2.5	48.27		**B5**	8200
	24	281	2.1	57.21		**B5**	8200
	25	266	2.6	55.27	**ITH113**	**B5**	8200
	21	325	2.2	67.61		**B5**	8200
	19	361	1.9	74.96		**B5**	8200
	15	441	1.6	91.70		**B5**	8200
	13	524	1.3	108.91		**B5**	8200
	10	657	1.1	136.65		**B5**	8200
	82	84	10	17.11	**ITH122**	**B5**	11895
	72	96	8.9	19.50		**B5**	12500
	65	105	8.6	21.43		**B5**	12500
	58	118	8.3	24.00		**B5**	12500
	53	129	7.6	26.28		**B5**	12500
	48	144	6.8	29.40		**B5**	12500
	43	159	6.2	32.31		**B5**	12500
	39	174	5.6	35.47		**B5**	12500
	34	205	4.8	41.78		**B5**	12500
	31	225	4.4	45.73		**B5**	12500
	28	248	4.0	50.40		**B5**	12500

P_1 [kW]	n_2 [min^{-1}]	M_2 [Nm]	sf	i		IEC	R_2 [N]
0.75							
80B4 (1400 min^{-1})	**25**	269	3.6	56.00	**ITH123**	**B5**	12500
	23	295	3.3	61.31		**B5**	12500
	20	339	2.9	70.53		**B5**	12500
	17	390	2.5	81.00		**B5**	12500
	16	426	2.3	88.68		**B5**	12500
	13	506	1.9	105.23		**B5**	12500
	12	554	1.8	115.21		**B5**	12500
	11	619	1.6	128.73		**B5**	12500
	9.7	693	1.4	144.00		**B5**	12500
	8.9	758	1.3	157.66		**B5**	12500
	7.9	856	1.1	178.10		**B5**	12500
	6.9	979	1.0	203.65		**B5**	12500
	6.5	1039	0.9	216.00		**B5**	12500
	37	185	10	37.71	**ITH132**	**B5**	18500
	33	205	9.3	41.80		**B5**	18500
	31	224	8.5	45.60		**B5**	18500
	28	245	7.8	49.88		**B5**	18500
	23	293	6.5	60.92	**ITH133**	**B5**	18500
	22	311	6.1	64.74		**B5**	18500
	20	341	5.6	70.88		**B5**	18500
	18	377	5.0	78.38		**B5**	18500
	16	419	4.5	87.14		**B5**	18500
	15	460	4.1	95.67		**B5**	18500
	13	529	3.6	109.93		**B5**	18500
	12	579	3.3	120.36		**B5**	18500
	10	648	2.9	134.66		**B5**	18500
	9.5	712	2.7	147.98		**B5**	18500
	8.6	781	2.4	162.45		**B5**	18500
	7.3	920	2.1	191.39		**B5**	18500
	6.7	1007	1.9	209.48		**B5**	18500
	6.1	1110	1.7	230.85		**B5**	18500
	18	382	9.2	79.43	**ITH143**	**B5**	22500
	16	413	8.5	85.85		**B5**	22500
	13	536	6.5	111.40		**B5**	22500
	12	579	6.0	120.42		**B5**	22500
	11	634	5.5	131.84		**B5**	22500
	9.5	709	4.9	147.51		**B5**	22500
	8.6	780	4.5	162.10		**B5**	22500
	7.9	856	4.1	177.95		**B5**	22500
	7.2	933	3.8	193.96		**B5**	22500
	6.7	1008	3.5	209.65		**B5**	22500
	6.1	1103	3.2	229.46		**B5**	22500
	5.5	1216	2.9	252.87		**B5**	22500

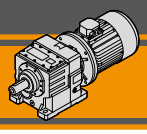

Dati tecnici

Technical data

P_1 [kW]	n_2 [min^{-1}]	M_2 [Nm]	sf	i		IEC	R_2 [N]
1.1							
90S4 (1400 min^{-1})	**260**	39	9.0	5.38	**ITH112**	**B5/14**	4354
	216	47	7.5	6.47		**B5/14**	4825
	178	57	7.1	7.88		**B5/14**	5374
	164	62	6.5	8.54		**B5/14**	5617
	155	65	6.4	9.06		**B5/14**	5798
	136	74	5.7	10.28		**B5/14**	6204
	123	82	5.8	11.39		**B5/14**	6550
	112	90	5.3	12.52		**B5/14**	6881
	95	107	4.7	14.80		**B5/14**	7500
	77	130	4.1	18.10		**B5/14**	8200
	69	146	3.6	20.25		**B5/14**	8200
	60	169	3.5	23.52		**B5/14**	8200
	54	188	3.2	26.16		**B5/14**	8200
	49	207	3.1	28.77		**B5/14**	8200
	44	232	2.9	32.18		**B5/14**	8200
	39	262	2.6	36.35		**B5/14**	8200
	34	299	2.3	41.57		**B5/14**	8200
	29	348	1.7	48.27		**B5/14**	8200
	24	412	1.5	57.21		**B5/14**	8200
	25	390	1.8	55.27	**ITH113**	**B5/14**	8200
	21	477	1.5	67.61		**B5/14**	8200
	19	529	1.3	74.96		**B5/14**	8200
	15	647	1.1	91.70		**B5/14**	8200
	13	768	0.9	108.91		**B5/14**	8200
	159	64	10	8.82	**ITH122**	**B5/14**	8152
	139	73	10	10.08		**B5/14**	8778
	123	82	9.2	11.35		**B5/14**	9371
	105	96	8.9	13.30		**B5/14**	10218
	88	115	7.4	15.92		**B5/14**	11257
	82	123	6.9	17.11		**B5/14**	11698
	72	140	6.1	19.50		**B5/14**	12500
	65	154	5.8	21.43		**B5/14**	12500
	58	173	5.7	24.00		**B5/14**	12500
	53	189	5.2	26.28		**B5/14**	12500
	48	212	4.6	29.40		**B5/14**	12500
	43	233	4.2	32.31		**B5/14**	12500
	39	255	3.8	35.47		**B5/14**	12500
	34	301	3.3	41.78		**B5/14**	12500
	31	329	3.0	45.73		**B5/14**	12500
	28	363	2.7	50.40		**B5/14**	12500
	25	395	2.5	56.00	**ITH123**	**B5/14**	12500
	23	432	2.3	61.31		**B5/14**	12500
	20	497	2.0	70.53		**B5/14**	12500
	17	571	1.7	81.00		**B5/14**	12500
	16	626	1.6	88.68		**B5/14**	12500
	13	742	1.3	105.23		**B5/14**	12500
	12	813	1.2	115.21		**B5/14**	12500
	11	908	1.1	128.73		**B5/14**	12500
	9.7	1016	1.0	144.00		**B5/14**	12500
	8.9	1112	0.9	157.66		**B5/14**	12500
	55	185	8.7	25.65	**ITH132**	**B5/14**	18500
	51	198	8.6	27.48		**B5/14**	18500
	46	219	7.7	30.46		**B5/14**	18500
	40	249	7.6	34.61		**B5/14**	18500
	37	272	7.0	37.71		**B5/14**	18500
	33	301	6.3	41.80		**B5/14**	18500
	31	328	5.8	45.60		**B5/14**	18500
	28	359	5.3	49.88		**B5/14**	18500

P_1 [kW]	n_2 [min^{-1}]	M_2 [Nm]	sf	i		IEC	R_2 [N]
1.1							
90S4 (1400 min^{-1})	**23**	430	4.4	60.92	**ITH133**	**B5/14**	18500
	22	457	4.2	64.74		**B5/14**	18500
	20	500	3.8	70.88		**B5/14**	18500
	18	553	3.4	78.38		**B5/14**	18500
	16	615	3.1	87.14		**B5/14**	18500
	15	675	2.8	95.67		**B5/14**	18500
	13	775	2.5	109.93		**B5/14**	18500
	12	849	2.2	120.36		**B5/14**	18500
	10	950	2.0	134.66		**B5/14**	18500
	9.5	1044	1.8	147.98		**B5/14**	18500
	8.6	1146	1.7	162.45		**B5/14**	18500
	7.3	1350	1.4	191.39		**B5/14**	18500
	6.7	1478	1.3	209.48		**B5/14**	18500
	6.1	1628	1.2	230.85		**B5/14**	18500
	23	435	8.0	61.74	**ITH143**	**B5/14**	22500
	21	471	7.4	66.73		**B5/14**	22500
	18	560	6.2	79.43		**B5/14**	22500
	16	606	5.8	85.85		**B5/14**	22500
	13	786	4.5	111.40		**B5/14**	22500
	12	849	4.1	120.42		**B5/14**	22500
	11	930	3.8	131.84		**B5/14**	22500
	9.5	1040	3.4	147.51		**B5/14**	22500
	8.6	1143	3.1	162.10		**B5/14**	22500
	7.9	1255	2.8	177.95		**B5/14**	22500
	7.2	1368	2.6	193.96		**B5/14**	22500
	6.7	1479	2.4	209.65		**B5/14**	22500
	6.1	1618	2.2	229.46		**B5/14**	22500
	5.5	1784	2.0	252.87		**B5/14**	22500
1.5							
90L4 (1400 min^{-1})	**260**	53	6.6	5.38	**ITH112**	**B5/14**	4313
	216	64	5.5	6.47		**B5/14**	4769
	178	77	5.2	7.88		**B5/14**	5299
	164	84	4.8	8.54		**B5/14**	5531
	155	89	4.7	9.06		**B5/14**	5703
	136	101	4.2	10.28		**B5/14**	6088
	123	112	4.3	11.39		**B5/14**	6414
	112	123	3.9	12.52		**B5/14**	6723
	95	145	3.4	14.80		**B5/14**	7294
	77	178	3.0	18.10		**B5/14**	8009
	69	199	2.7	20.25		**B5/14**	8200
	60	231	2.6	23.52		**B5/14**	8200
	54	257	2.3	26.16		**B5/14**	8200
	49	283	2.3	28.77		**B5/14**	8200
	44	316	2.2	32.18		**B5/14**	8200
	39	357	1.9	36.35		**B5/14**	8200
	34	408	1.7	41.57		**B5/14**	8200
	29	474	1.3	48.27		**B5/14**	8200
	24	562	1.1	57.21		**B5/14**	8200
	25	532	1.3	55.27	**ITH113**	**B5/14**	8200
	21	650	1.1	67.61		**B5/14**	8200
	19	721	1.0	74.96		**B5/14**	8200

Dati tecnici

P_1 [kW]	n_2 [min^{-1}]	M_2 [Nm]	sf	i		IEC	R_2 [N]
1.5							
90L4 (1400 min^{-1})	**271**	50	11	5.17	**ITH122**	**B5/14**	6002
	209	66	8.4	6.69		**B5/14**	6929
	180	77	7.8	7.79		**B5/14**	7541
	159	87	7.5	8.82		**B5/14**	8073
	139	99	7.6	10.08		**B5/14**	8681
	123	111	6.7	11.35		**B5/14**	9253
	105	131	6.5	13.30		**B5/14**	10067
	88	156	5.4	15.92		**B5/14**	11056
	82	168	5.1	17.11		**B5/14**	11473
	72	192	4.4	19.50		**B5/14**	12254
	65	210	4.3	21.43		**B5/14**	12500
	58	236	4.2	24.00		**B5/14**	12500
	53	258	3.8	26.28		**B5/14**	12500
	48	289	3.4	29.40		**B5/14**	12500
	43	317	3.1	32.31		**B5/14**	12500
	39	348	2.8	35.47		**B5/14**	12500
	34	410	2.4	41.78		**B5/14**	12500
	31	449	2.2	45.73		**B5/14**	12500
	28	495	2.0	50.40		**B5/14**	12500
	25	539	1.8	56.00	**ITH123**	**B5/14**	12500
	23	590	1.7	61.31		**B5/14**	12500
	20	678	1.4	70.53		**B5/14**	12500
	17	779	1.3	81.00		**B5/14**	12500
	16	853	1.1	88.68		**B5/14**	12500
	13	1012	1.0	105.23		**B5/14**	12500
	155	89	10	9.03	**ITH132**	**B5/14**	18500
	136	101	9.4	10.30		**B5/14**	18500
	127	108	8.8	11.01		**B5/14**	18500
	113	122	9.9	12.39		**B5/14**	18500
	95	145	8.3	14.80		**B5/14**	18500
	93	148	8.8	15.11		**B5/14**	18500
	75	184	8.2	18.69		**B5/14**	18500
	69	199	8.0	20.31		**B5/14**	18500
	55	252	6.4	25.65		**B5/14**	18500
	51	270	6.3	27.48		**B5/14**	18500
	46	299	5.7	30.46		**B5/14**	18500
	40	340	5.6	34.61		**B5/14**	18500
	37	370	5.1	37.71		**B5/14**	18500
	33	411	4.6	41.80		**B5/14**	18500
	31	448	4.2	45.60		**B5/14**	18500
	28	490	3.9	49.88		**B5/14**	18500
	23	586	3.2	60.92	**ITH133**	**B5/14**	18500
	22	623	3.1	64.74		**B5/14**	18500
	20	682	2.8	70.88		**B5/14**	18500
	18	754	2.5	78.38		**B5/14**	18500
	16	838	2.3	87.14		**B5/14**	18500
	15	920	2.1	95.67		**B5/14**	18500
	13	1057	1.8	109.93		**B5/14**	18500
	12	1158	1.6	120.36		**B5/14**	18500
	10	1295	1.5	134.66		**B5/14**	18500
	9.5	1423	1.3	147.98		**B5/14**	18500
	8.6	1562	1.2	162.45		**B5/14**	18500
	7.3	1841	1.0	191.39		**B5/14**	18500

Technical data

P_1 [kW]	n_2 [min^{-1}]	M_2 [Nm]	sf	i		IEC	R_2 [N]
1.5							
90L4 (1400 min^{-1})	**23**	594	5.9	61.74	**ITH143**	**B5/14**	22500
	21	642	5.5	66.73		**B5/14**	22500
	18	764	4.6	79.43		**B5/14**	22500
	16	826	4.2	85.85		**B5/14**	22500
	13	1072	3.3	111.40		**B5/14**	22500
	12	1158	3.0	120.42		**B5/14**	22500
	11	1268	2.8	131.84		**B5/14**	22500
	9.5	1419	2.5	147.51		**B5/14**	22500
	8.6	1559	2.2	162.10		**B5/14**	22500
	7.9	1712	2.0	177.95		**B5/14**	22500
	7.2	1866	1.9	193.96		**B5/14**	22500
	6.7	2016	1.7	209.65		**B5/14**	22500
	6.1	2207	1.6	229.46		**B5/14**	22500
	5.5	2432	1.4	252.87		**B5/14**	22500
1.85							
90LB4 (1400 min^{-1})	**260**	65	5.4	5.38	**ITH112**	**B5/14**	4276
	216	78	4.5	6.47		**B5/14**	4721
	178	95	4.2	7.88		**B5/14**	5232
	164	103	3.9	8.54		**B5/14**	5455
	155	110	3.8	9.06		**B5/14**	5620
	136	125	3.4	10.28		**B5/14**	5987
	123	138	3.5	11.39		**B5/14**	6295
	112	152	3.2	12.52		**B5/14**	6584
	95	179	2.8	14.80		**B5/14**	7113
	77	219	2.4	18.10		**B5/14**	7761
	69	245	2.2	20.25		**B5/14**	8120
	60	285	2.1	23.52		**B5/14**	8200
	54	317	1.9	26.16		**B5/14**	8200
	49	349	1.9	28.77		**B5/14**	8200
	44	390	1.7	32.18		**B5/14**	8200
	39	440	1.5	36.35		**B5/14**	8200
	34	504	1.4	41.57		**B5/14**	8200
	29	585	1.0	48.27		**B5/14**	8200
	25	656	1.1	55.27	**ITH113**	**B5/14**	8200
	271	61	9.0	5.17	**ITH122**	**B5/14**	5973
	209	81	6.8	6.69		**B5/14**	6884
	180	94	6.4	7.79		**B5/14**	7485
	159	107	6.1	8.82		**B5/14**	8004
	139	122	6.1	10.08		**B5/14**	8595
	123	137	5.5	11.35		**B5/14**	9150
	105	161	5.3	13.30		**B5/14**	9935
	88	193	4.4	15.92		**B5/14**	10880
	82	207	4.1	17.11		**B5/14**	11276
	72	236	3.6	19.50		**B5/14**	12012
	65	260	3.5	21.43		**B5/14**	12500
	58	291	3.4	24.00		**B5/14**	12500
	53	318	3.1	26.28		**B5/14**	12500
	48	356	2.8	29.40		**B5/14**	12500
	43	391	2.5	32.31		**B5/14**	12500
	39	430	2.3	35.47		**B5/14**	12500
	34	506	1.9	41.78		**B5/14**	12500
	31	554	1.8	45.73		**B5/14**	12500
	28	611	1.6	50.40		**B5/14**	12500
	25	664	1.5	56.00	**ITH123**	**B5/14**	12500
	23	727	1.3	61.31		**B5/14**	12500
	20	837	1.2	70.53		**B5/14**	12500
	17	961	1.0	81.00		**B5/14**	12500
	16	1052	0.9	88.68		**B5/14**	12500

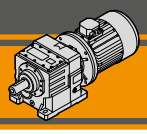

Dati tecnici

Technical data

P_1 [kW]	n_2 [min^{-1}]	M_2 [Nm]	sf	i		IEC	R_2 [N]
1.85							
90LB4 (1400 min^{-1})	**155**	109	8.2	9.03	**ITH132**	**B5/14**	18500
	136	125	7.6	10.30		**B5/14**	18500
	127	133	7.1	11.01		**B5/14**	18500
	113	150	8.0	12.39		**B5/14**	18500
	95	179	6.7	14.80		**B5/14**	18500
	93	183	7.1	15.11		**B5/14**	18500
	75	226	6.6	18.69		**B5/14**	18500
	69	246	6.5	20.31		**B5/14**	18500
	55	311	5.1	25.65		**B5/14**	18500
	51	333	5.1	27.48		**B5/14**	18500
	46	369	4.6	30.46		**B5/14**	18500
	40	419	4.5	34.61		**B5/14**	18500
	37	457	4.2	37.71		**B5/14**	18500
	33	506	3.8	41.80		**B5/14**	18500
	31	552	3.4	45.60		**B5/14**	18500
	28	604	3.1	49.88		**B5/14**	18500
	23	723	2.6	60.92	**ITH133**	**B5/14**	18500
	22	768	2.5	64.74		**B5/14**	18500
	20	841	2.3	70.88		**B5/14**	18500
	18	930	2.0	78.38		**B5/14**	18500
	16	1034	1.8	87.14		**B5/14**	18500
	15	1135	1.7	95.67		**B5/14**	18500
	13	1304	1.5	109.93		**B5/14**	18500
	12	1428	1.3	120.36		**B5/14**	18500
	10	1597	1.2	134.66		**B5/14**	18500
	9.5	1755	1.1	147.98		**B5/14**	18500
	8.6	1927	1.0	162.45		**B5/14**	18500
	23	732	4.8	61.74	**ITH143**	**B5/14**	22500
	21	792	4.4	66.73		**B5/14**	22500
	18	942	3.7	79.43		**B5/14**	22500
	16	1018	3.4	85.85		**B5/14**	22500
	13	1322	2.6	111.40		**B5/14**	22500
	12	1428	2.5	120.42		**B5/14**	22500
	11	1564	2.2	131.84		**B5/14**	22500
	9.5	1750	2.0	147.51		**B5/14**	22500
	8.6	1923	1.8	162.10		**B5/14**	22500
	7.9	2111	1.7	177.95		**B5/14**	22500
	7.2	2301	1.5	193.96		**B5/14**	22500
	6.7	2487	1.4	209.65		**B5/14**	22500
	6.1	2722	1.3	229.46		**B5/14**	22500
	5.5	3000	1.2	252.87		**B5/14**	22500
2.2							
100LA4 (1400 min^{-1})	260	77	4.5	5.38	**ITH112**	**B5/14**	4240
	216	93	3.8	6.47		**B5/14**	4672
	178	113	3.5	7.88		**B5/14**	5166
	164	123	3.3	8.54		**B5/14**	5379
	155	131	3.2	9.06		**B5/14**	5537
	136	148	2.8	10.28		**B5/14**	5886
	123	164	2.9	11.39		**B5/14**	6175
	112	180	2.7	12.52		**B5/14**	6446
	95	213	2.3	14.80		**B5/14**	6933
	77	261	2.0	18.10		**B5/14**	7513
	69	292	1.8	20.25		**B5/14**	7823
	60	339	1.8	23.52		**B5/14**	8200
	54	377	1.6	26.16		**B5/14**	8200
	49	414	1.6	28.77		**B5/14**	8200
	44	464	1.5	32.18		**B5/14**	8200
	39	524	1.3	36.35		**B5/14**	8200
	34	599	1.1	41.57		**B5/14**	8200

P_1 [kW]	n_2 [min^{-1}]	M_2 [Nm]	sf	i		IEC	R_2 [N]
2.2							
100LA4 (1400 min^{-1})	271	73	7.5	5.17	**ITH122**	**B5/14**	5944
	209	96	5.7	6.69		**B5/14**	6840
	180	112	5.3	7.79		**B5/14**	7428
	159	127	5.1	8.82		**B5/14**	7935
	139	145	5.2	10.08		**B5/14**	8510
	123	164	4.6	11.35		**B5/14**	9047
	105	192	4.4	13.30		**B5/14**	9803
	88	229	3.7	15.92		**B5/14**	10704
	82	247	3.4	17.11		**B5/14**	11079
	72	281	3.0	19.50		**B5/14**	11770
	65	309	2.9	21.43		**B5/14**	12276
	58	346	2.8	24.00		**B5/14**	12500
	53	379	2.6	26.28		**B5/14**	12500
	48	424	2.3	29.40		**B5/14**	12500
	43	465	2.1	32.31		**B5/14**	12500
	39	511	1.9	35.47		**B5/14**	12500
	34	602	1.6	41.78		**B5/14**	12500
	31	659	1.5	45.73		**B5/14**	12500
	28	726	1.3	50.40		**B5/14**	12500
	25	790	1.2	56.00	**ITH123**	**B5/14**	12500
	23	865	1.1	61.31		**B5/14**	12500
	20	995	1.0	70.53		**B5/14**	12500
	155	130	6.9	9.03	**ITH132**	**B5/14**	18500
	136	148	6.4	10.30		**B5/14**	18500
	127	159	6.0	11.01		**B5/14**	18500
	113	179	6.7	12.39		**B5/14**	18500
	95	213	5.6	14.80		**B5/14**	18500
	93	218	6.0	15.11		**B5/14**	18500
	75	269	5.6	18.69		**B5/14**	18500
	69	293	5.5	20.31		**B5/14**	18500
	55	370	4.3	25.65		**B5/14**	18500
	51	396	4.3	27.48		**B5/14**	18500
	46	439	3.9	30.46		**B5/14**	18500
	40	499	3.8	34.61		**B5/14**	18500
	37	543	3.5	37.71		**B5/14**	18500
	33	602	3.2	41.80		**B5/14**	18500
	31	657	2.9	45.60		**B5/14**	18500
	28	719	2.6	49.88		**B5/14**	18500
	23	859	2.2	60.92	**ITH133**	**B5/14**	18500
	22	913	2.1	64.74		**B5/14**	18500
	20	1000	1.9	70.88		**B5/14**	18500
	18	1106	1.7	78.38		**B5/14**	18500
	16	1229	1.5	87.14		**B5/14**	18500
	15	1350	1.4	95.67		**B5/14**	18500
	13	1551	1.2	109.93		**B5/14**	18500
	12	1698	1.1	120.36		**B5/14**	18500
	10	1900	1.0	134.66		**B5/14**	18500
	85	236	9.7	16.40	**ITH142**	**B5/14**	22500
	69	292	9.6	20.24		**B5/14**	22500
	54	374	8.5	25.99		**B5/14**	22500
	43	466	6.9	32.35		**B5/14**	22500
	32	628	5.1	43.57		**B5/14**	22500
	30	682	4.7	47.35		**B5/14**	22500
	27	746	4.3	51.76		**B5/14**	22500

Dati tecnici

Technical data

P_1 [kW]	n_2 [min^{-1}]	M_2 [Nm]	sf	i		IEC	R_2 [N]
2.2							
100LA4 (1400 min^{-1})	**23**	871	4.0	61.74	**ITH143**	**B5/14**	22500
	21	941	3.7	66.73		**B5/14**	22500
	18	1120	3.1	79.43		**B5/14**	22500
	16	1211	2.9	85.85		**B5/14**	22500
	13	1572	2.2	111.40		**B5/14**	22500
	12	1699	2.1	120.42		**B5/14**	22500
	11	1860	1.9	131.84		**B5/14**	22500
	9.5	2081	1.7	147.51		**B5/14**	22500
	8.6	2287	1.5	162.10		**B5/14**	22500
	7.9	2510	1.4	177.95		**B5/14**	22500
	7.2	2736	1.3	193.96		**B5/14**	22500
	6.7	2957	1.2	209.65		**B5/14**	22500
	6.1	3237	1.1	229.46		**B5/14**	22500
	5.5	3567	1.0	252.87		**B5/14**	22500
3.0							
100LB4 (1400 min^{-1})	**260**	106	3.3	5.38	**ITH112**	**B5/14**	4157
	216	127	2.8	6.47		**B5/14**	4561
	178	155	2.6	7.88		**B5/14**	5014
	164	168	2.4	8.54		**B5/14**	5207
	155	178	2.4	9.06		**B5/14**	5348
	136	202	2.1	10.28		**B5/14**	5654
	123	224	2.1	11.39		**B5/14**	5903
	112	246	2.0	12.52		**B5/14**	6130
	95	291	1.7	14.80		**B5/14**	6521
	77	356	1.5	18.10		**B5/14**	6946
	69	398	1.3	20.25		**B5/14**	7146
	60	462	1.3	23.52		**B5/14**	7350
	54	514	1.2	26.16		**B5/14**	7437
	49	565	1.2	28.77		**B5/14**	7459
	44	632	1.1	32.18		**B5/14**	7402
	39	714	1.0	36.35		**B5/14**	7212
	271	99	5.5	5.17	**ITH122**	**B5/14**	5878
	209	131	4.2	6.69		**B5/14**	6738
	180	153	3.9	7.79		**B5/14**	7298
	159	173	3.8	8.82		**B5/14**	7777
	139	198	3.8	10.08		**B5/14**	8315
	123	223	3.4	11.35		**B5/14**	8812
	105	261	3.3	13.30		**B5/14**	9500
	88	313	2.7	15.92		**B5/14**	10302
	82	336	2.5	17.11		**B5/14**	10628
	72	383	2.2	19.50		**B5/14**	11215
	65	421	2.1	21.43		**B5/14**	11633
	58	471	2.1	24.00		**B5/14**	12118
	53	516	1.9	26.28		**B5/14**	12487
	48	578	1.7	29.40		**B5/14**	12500
	43	635	1.5	32.31		**B5/14**	12500
	39	697	1.4	35.47		**B5/14**	12500
	34	821	1.2	41.78		**B5/14**	12500
	31	898	1.1	45.73		**B5/14**	12500
	28	990	1.0	50.40		**B5/14**	12500
	25	1077	0.9	56.00	**ITH123**	**B5/14**	12500

P_1 [kW]	n_2 [min^{-1}]	M_2 [Nm]	sf	i		IEC	R_2 [N]
3.0							
100LB4 (1400 min^{-1})	**155**	177	5.1	9.03	**ITH132**	**B5/14**	18500
	136	202	4.7	10.30		**B5/14**	18500
	127	216	4.4	11.01		**B5/14**	18500
	113	243	4.9	12.39		**B5/14**	18500
	95	291	4.1	14.80		**B5/14**	18500
	93	297	4.4	15.11		**B5/14**	18500
	75	367	4.1	18.69		**B5/14**	18500
	69	399	4.0	20.31		**B5/14**	18500
	55	504	3.2	25.65		**B5/14**	18500
	51	540	3.1	27.48		**B5/14**	18500
	46	598	2.8	30.46		**B5/14**	18500
	40	680	2.8	34.61		**B5/14**	18500
	37	741	2.6	37.71		**B5/14**	18500
	33	821	2.3	41.80		**B5/14**	18500
	31	896	2.1	45.60		**B5/14**	18500
	28	980	1.9	49.88		**B5/14**	18500
	23	1172	1.6	60.92	**ITH133**	**B5/14**	18500
	22	1245	1.5	64.74		**B5/14**	18500
	20	1363	1.4	70.88		**B5/14**	18500
	18	1508	1.3	78.38		**B5/14**	18500
	16	1676	1.1	87.14		**B5/14**	18500
	15	1840	1.0	95.67		**B5/14**	18500
	110	251	8.8	12.78	**ITH142**	**B5/14**	22500
	99	277	8.3	14.08		**B5/14**	22500
	85	322	7.1	16.40		**B5/14**	22500
	69	398	7.0	20.24		**B5/14**	22500
	54	511	6.3	25.99		**B5/14**	22500
	43	636	5.0	32.35		**B5/14**	22500
	32	856	3.7	43.57		**B5/14**	22500
	30	930	3.4	47.35		**B5/14**	22500
	27	1017	3.1	51.76		**B5/14**	22500
	23	1188	2.9	61.74	**ITH143**	**B5/14**	22500
	21	1284	2.7	66.73		**B5/14**	22500
	18	1528	2.3	79.43		**B5/14**	22500
	16	1651	2.1	85.85		**B5/14**	22500
	13	2143	1.6	111.40		**B5/14**	22500
	12	2316	1.5	120.42		**B5/14**	22500
	11	2536	1.4	131.84		**B5/14**	22500
	9.5	2838	1.2	147.51		**B5/14**	22500
	8.6	3118	1.1	162.10		**B5/14**	22500
	7.9	3423	1.0	177.95		**B5/14**	22500
4.0							
112M4 (1400 min^{-1})	**260**	141	2.5	5.38	**ITH112**	**B5/14**	4053
	216	169	2.1	6.47		**B5/14**	4422
	178	206	1.9	7.88		**B5/14**	4824
	164	224	1.8	8.54		**B5/14**	4991
	155	237	1.8	9.06		**B5/14**	5111
	136	269	1.6	10.28		**B5/14**	5365
	123	298	1.6	11.39		**B5/14**	5563
	112	328	1.5	12.52		**B5/14**	5735
	95	388	1.3	14.80		**B5/14**	6005
	77	474	1.1	18.10		**B5/14**	6237
	69	530	1.0	20.25		**B5/14**	6299
	60	616	1.0	23.52		**B5/14**	6277

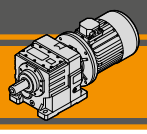

Dati tecnici

Technical data

P_1 [kW]	n_2 [min^{-1}]	M_2 [Nm]	sf	i		IEC	R_2 [N]
4.0							
112M4 (1400 min^{-1})	**271**	133	4.1	5.17	**ITH122**	**B5/14**	5795
	209	175	3.1	6.69		**B5/14**	6611
	180	204	2.9	7.79		**B5/14**	7136
	159	231	2.8	8.82		**B5/14**	7580
	139	264	2.8	10.08		**B5/14**	8072
	123	297	2.5	11.35		**B5/14**	8518
	105	348	2.4	13.30		**B5/14**	9122
	88	417	2.0	15.92		**B5/14**	9800
	82	448	1.9	17.11		**B5/14**	10065
	72	511	1.7	19.50		**B5/14**	10523
	65	561	1.6	21.43		**B5/14**	10828
	58	629	1.6	24.00		**B5/14**	11156
	53	688	1.4	26.28		**B5/14**	11377
	48	770	1.3	29.40		**B5/14**	11583
	43	846	1.2	32.31		**B5/14**	11683
	39	929	1.1	35.47		**B5/14**	11701
	34	1095	0.9	41.78		**B5/14**	11474
	155	237	3.8	9.03	**ITH132**	**B5/14**	18353
	136	270	3.5	10.30		**B5/14**	18500
	127	288	3.3	11.01		**B5/14**	18500
	113	325	3.7	12.39		**B5/14**	18500
	95	388	3.1	14.80		**B5/14**	18500
	93	396	3.3	15.11		**B5/14**	18500
	75	490	3.1	18.69		**B5/14**	18500
	69	532	3.0	20.31		**B5/14**	18500
	55	672	2.4	25.65		**B5/14**	18500
	51	720	2.4	27.48		**B5/14**	18500
	46	798	2.1	30.46		**B5/14**	18500
	40	907	2.1	34.61		**B5/14**	18500
	37	988	1.9	37.71		**B5/14**	18500
	33	1095	1.7	41.80		**B5/14**	18500
	31	1194	1.6	45.60		**B5/14**	18500
	28	1306	1.5	49.88		**B5/14**	18500
	23	1562	1.2	60.92	**ITH133**	**B5/14**	18500
	22	1660	1.1	64.74		**B5/14**	18500
	20	1818	1.0	70.88		**B5/14**	18500
	18	2010	0.9	78.38		**B5/14**	18500
	110	335	6.6	12.78	**ITH142**	**B5/14**	22500
	99	369	6.2	14.08		**B5/14**	22500
	85	429	5.4	16.40		**B5/14**	22500
	69	530	5.3	20.24		**B5/14**	22500
	54	681	4.7	25.99		**B5/14**	22500
	43	847	3.8	32.35		**B5/14**	22500
	32	1141	2.8	43.57		**B5/14**	22500
	30	1240	2.6	47.35		**B5/14**	22500
	27	1356	2.4	51.76		**B5/14**	22500
	23	1583	2.2	61.74	**ITH143**	**B5/14**	22500
	21	1712	2.0	66.73		**B5/14**	22500
	18	2037	1.7	79.43		**B5/14**	22500
	16	2202	1.6	85.85		**B5/14**	22500
	13	2857	1.2	111.40		**B5/14**	22500
	12	3088	1.1	120.42		**B5/14**	22500
	11	3381	1.0	131.84		**B5/14**	22500

P_1 [kW]	n_2 [min^{-1}]	M_2 [Nm]	sf	i		IEC	R_2 [N]
5.5							
132S4 (1400 min^{-1})	**260**	194	1.8	5.38	**ITH112**	**B5/B14**	3898
	216	233	1.5	6.47		**B5/B14**	4213
	178	284	1.4	7.88		**B5/B14**	4539
	164	308	1.3	8.54		**B5/B14**	4667
	155	326	1.3	9.06		**B5/B14**	4756
	136	370	1.1	10.28		**B5/B14**	4930
	123	410	1.2	11.39		**B5/B14**	5052
	112	451	1.1	12.52		**B5/B14**	5142
	271	182	3.0	5.17	**ITH122**	**B5/B14**	5671
	209	241	2.3	6.69		**B5/B14**	6420
	180	281	2.1	7.79		**B5/B14**	6893
	159	318	2.0	8.82		**B5/B14**	7284
	139	363	2.1	10.08		**B5/B14**	7706
	123	409	1.8	11.35		**B5/B14**	8077
	105	479	1.8	13.30		**B5/B14**	8555
	88	573	1.5	15.92		**B5/B14**	9047
	82	616	1.4	17.11		**B5/B14**	9220
	72	702	1.2	19.50		**B5/B14**	9484
	65	772	1.2	21.43		**B5/B14**	9622
	58	864	1.1	24.00		**B5/B14**	9712
	53	946	1.0	26.28		**B5/B14**	9710
	48	1059	0.9	29.40		**B5/B14**	9593
	278	178	4.8	5.03	**ITH132**	**B5/B14**	13316
	230	219	3.9	6.09		**B5/B14**	14674
	203	249	3.6	6.91		**B5/B14**	15633
	186	270	3.3	7.51		**B5/B14**	16290
	167	301	3.0	8.36		**B5/B14**	17159
	155	325	2.8	9.03		**B5/B14**	17797
	136	371	2.6	10.30		**B5/B14**	18500
	127	396	2.4	11.01		**B5/B14**	18500
	113	446	2.7	12.39		**B5/B14**	18500
	95	533	2.3	14.80		**B5/B14**	18500
	93	544	2.4	15.11		**B5/B14**	18500
	75	673	2.2	18.69		**B5/B14**	18500
	69	731	2.2	20.31		**B5/B14**	18500
	55	924	1.7	25.65		**B5/B14**	18500
	51	990	1.7	27.48		**B5/B14**	18500
	46	1097	1.5	30.46		**B5/B14**	18500
	40	1246	1.5	34.61		**B5/B14**	18500
	37	1358	1.4	37.71		**B5/B14**	18500
	33	1506	1.3	41.80		**B5/B14**	18500
	31	1642	1.2	45.60		**B5/B14**	18500
	28	1796	1.1	49.88		**B5/B14**	18500
	228	217	8.3	6.15	**ITH142**	**B5/B14**	21811
	190	265	6.8	7.35		**B5/B14**	22500
	158	320	6.3	8.88		**B5/B14**	22500
	144	351	5.7	9.75		**B5/B14**	22500
	135	373	5.6	10.35		**B5/B14**	22500
	120	419	5.0	11.65		**B5/B14**	22500
	110	460	4.8	12.78		**B5/B14**	22500
	99	507	4.5	14.08		**B5/B14**	22500
	85	591	3.9	16.40		**B5/B14**	22500
	79	639	4.4	17.73		**B5/B14**	22500
	69	729	3.8	20.24		**B5/B14**	22500
	54	936	3.4	25.99		**B5/B14**	22500
	50	1012	3.2	28.10		**B5/B14**	22500
	43	1165	2.7	32.35		**B5/B14**	22500
	38	1336	2.4	37.09		**B5/B14**	22500
	32	1569	2.0	43.57		**B5/B14**	22500
	30	1705	1.9	47.35		**B5/B14**	22500
	27	1864	1.7	51.76		**B5/B14**	22500

Dati tecnici

Technical data

P_1 [kW]	n_2 [min^{-1}]	M_2 [Nm]	sf	i		IEC	R_2 [N]
5.5							
132S4 (1400 min^{-1})	**23**	2177	1.6	61.74	**ITH143**	**B5/B14**	22500
	21	2353	1.5	66.73		**B5/B14**	22500
	18	2801	1.2	79.43		**B5/B14**	22500
	16	3028	1.2	85.85		**B5/B14**	22500
7.5							
132MA4 (1400 min^{-1})	**260**	264	1.3	5.38	**ITH112**	**B5/B14**	3691
	216	318	1.1	6.47		**B5/B14**	3935
	178	387	1.0	7.88		**B5/B14**	4160
	164	420	1.0	8.54		**B5/B14**	4235
	155	445	0.9	9.06		**B5/B14**	4282
	271	249	2.2	5.17	**ITH122**	**B5/B14**	5505
	209	328	1.7	6.69		**B5/B14**	6166
	180	383	1.6	7.79		**B5/B14**	6569
	159	433	1.5	8.82		**B5/B14**	6890
	139	495	1.5	10.08		**B5/B14**	7219
	123	557	1.3	11.35		**B5/B14**	7489
	105	653	1.3	13.30		**B5/B14**	7800
	88	782	1.1	15.92		**B5/B14**	8042
	82	840	1.0	17.11		**B5/B14**	8094
	278	242	3.5	5.03	**ITH132**	**B5/B14**	13028
	230	299	2.8	6.09		**B5/B14**	14276
	203	339	2.7	6.91		**B5/B14**	15148
	186	369	2.4	7.51		**B5/B14**	15736
	167	411	2.2	8.36		**B5/B14**	16503
	155	444	2.0	9.03		**B5/B14**	17056
	136	506	1.9	10.30		**B5/B14**	17997
	127	541	1.8	11.01		**B5/B14**	18461
	113	609	2.0	12.39		**B5/B14**	18500
	95	727	1.7	14.80		**B5/B14**	18500
	93	742	1.8	15.11		**B5/B14**	18500
	75	918	1.6	18.69		**B5/B14**	18500
	69	997	1.6	20.31		**B5/B14**	18500
	55	1260	1.3	25.65		**B5/B14**	18500
	51	1350	1.3	27.48		**B5/B14**	18500
	46	1496	1.1	30.46		**B5/B14**	18500
	40	1700	1.1	34.61		**B5/B14**	18500
	37	1852	1.0	37.71		**B5/B14**	18500
	228	296	6.1	6.15	**ITH142**	**B5/B14**	21469
	190	361	5.0	7.35		**B5/B14**	22500
	158	436	4.6	8.88		**B5/B14**	22500
	144	479	4.2	9.75		**B5/B14**	22500
	135	508	4.1	10.35		**B5/B14**	22500
	120	572	3.7	11.65		**B5/B14**	22500
	110	627	3.5	12.78		**B5/B14**	22500
	99	691	3.3	14.08		**B5/B14**	22500
	85	805	2.9	16.40		**B5/B14**	22500
	79	871	3.2	17.73		**B5/B14**	22500
	69	994	2.8	20.24		**B5/B14**	22500
	54	1277	2.5	25.99		**B5/B14**	22500
	50	1380	2.3	28.10		**B5/B14**	22500
	43	1589	2.0	32.35		**B5/B14**	22500
	38	1821	1.8	37.09		**B5/B14**	22500
	32	2140	1.5	43.57		**B5/B14**	22500
	30	2326	1.4	47.35		**B5/B14**	22500
	27	2542	1.3	51.76		**B5/B14**	22500
	23	2969	1.2	61.74	**ITH143**	**B5/B14**	22500
	21	3209	1.1	66.73		**B5/B14**	22500

P_1 [kW]	n_2 [min^{-1}]	M_2 [Nm]	sf	i		IEC	R_2 [N]
9.2							
132L4 (1400 min^{-1})	**260**	324	1.1	5.38	**ITH112**	**B5/B14**	3514
	271	305	1.8	5.17	**ITH122**	**B5/B14**	5364
	209	403	1.4	6.69		**B5/B14**	5949
	180	469	1.3	7.79		**B5/B14**	6293
	159	531	1.2	8.82		**B5/B14**	6554
	139	607	1.2	10.08		**B5/B14**	6805
	123	684	1.1	11.35		**B5/B14**	6989
	105	801	1.1	13.30		**B5/B14**	7157
	278	297	2.9	5.03	**ITH132**	**B5/B14**	12784
	230	367	2.3	6.09		**B5/B14**	13938
	203	416	2.2	6.91		**B5/B14**	14736
	186	452	2.0	7.51		**B5/B14**	15266
	167	504	1.8	8.36		**B5/B14**	15945
	155	544	1.7	9.03		**B5/B14**	16426
	136	621	1.5	10.30		**B5/B14**	17221
	127	663	1.4	11.01		**B5/B14**	17599
	113	747	1.6	12.39		**B5/B14**	18229
	95	892	1.3	14.80		**B5/B14**	18500
	93	910	1.4	15.11		**B5/B14**	18500
	75	1126	1.3	18.69		**B5/B14**	18500
	69	1223	1.3	20.31		**B5/B14**	18500
	55	1545	1.0	25.65		**B5/B14**	18500
	51	1656	1.0	27.48		**B5/V14**	18104
	228	363	5.0	6.15	**ITH142**	**B5/B14**	21179
	190	443	4.1	7.35		**B5/B14**	22500
	158	535	3.7	8.88		**B5/B14**	22500
	144	587	3.4	9.75		**B5/B14**	22500
	135	623	3.4	10.35		**B5/B14**	22500
	120	702	3.0	11.65		**B5/B14**	22500
	110	770	2.9	12.78		**B5/B14**	22500
	99	848	2.7	14.08		**B5/B14**	22500
	85	988	2.3	16.40		**B5/B14**	22500
	79	1068	2.6	17.73		**B5/B14**	22500
	69	1219	2.3	20.24		**B5/B14**	22500
	54	1566	2.0	25.99		**B5/B14**	22500
	50	1693	1.9	28.10		**B5/B14**	22500
	43	1949	1.6	32.35		**B5/B14**	22500
	38	2234	1.4	37.09		**B5/B14**	22500
	32	2625	1.2	43.57		**B5/B14**	22500
	30	2853	1.1	47.35		**B5/B14**	22500
	27	3118	1.0	51.76		**B5/B14**	22500
	23	3642	1.0	61.74	**ITH143**	**B5/B14**	22500
11.0							
160M4 (1400 min^{-1})	**278**	355	2.4	5.03	**ITH132**	**B5**	12525
	230	439	1.9	6.09		**B5**	13580
	203	498	1.8	6.91		**B5**	14299
	186	541	1.7	7.51		**B5**	14768
	167	602	1.5	8.36		**B5**	15355
	155	650	1.4	9.03		**B5**	15759
	136	742	1.3	10.30		**B5**	16398
	127	793	1.2	11.01		**B5**	16686
	113	893	1.3	12.39		**B5**	17128
	95	1066	1.1	14.80		**B5**	17547
	93	1088	1.2	15.11		**B5**	17571
	75	1346	1.1	18.69		**B5**	17421
	69	1463	1.1	20.31		**B5**	17114

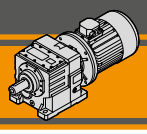

Dati tecnici

Technical data

P_1 [kW]	n_2 [min^{-1}]	M_2 [Nm]	sf	i		IEC	R_2 [N]
11.0							
160M4 (1400 min^{-1})	**228**	434	4.1	6.15	**ITH142**	**B5**	20871
	190	529	3.4	7.35		**B5**	22500
	158	640	3.1	8.88		**B5**	22500
	144	702	2.8	9.75		**B5**	22500
	135	745	2.8	10.35		**B5**	22500
	120	839	2.5	11.65		**B5**	22500
	110	920	2.4	12.78		**B5**	22500
	99	1014	2.3	14.08		**B5**	22500
	85	1181	1.9	16.40		**B5**	22500
	79	1277	2.2	17.73		**B5**	22500
	69	1458	1.9	20.24		**B5**	22500
	54	1872	1.7	25.99		**B5**	22500
	50	2024	1.6	28.10		**B5**	22500
	43	2330	1.4	32.35		**B5**	22500
	38	2671	1.2	37.09		**B5**	22500
	32	3139	1.0	43.57		**B5**	22500
15.0							
160L4 (1400 min^{-1})	**278**	484	1.8	5.03	**ITH132**	**B5**	11949
	230	598	1.4	6.09		**B5**	12785
	203	679	1.3	6.91		**B5**	13329
	186	738	1.2	7.51		**B5**	13661
	167	821	1.1	8.36		**B5**	14043
	155	887	1.0	9.03		**B5**	14276
	228	592	3.0	6.15	**ITH142**	**B5**	20188
	190	722	2.5	7.35		**B5**	21643
	158	873	2.3	8.88		**B5**	22500
	144	957	2.1	9.75		**B5**	22500
	135	1016	2.1	10.35		**B5**	22500
	120	1144	1.8	11.65		**B5**	22500
	110	1255	1.8	12.78		**B5**	22500
	99	1383	1.7	14.08		**B5**	22500
	85	1610	1.4	16.40		**B5**	22500
	79	1742	1.6	17.73		**B5**	22500
	69	1988	1.4	20.24		**B5**	22500
	54	2553	1.3	25.99		**B5**	22500
	50	2760	1.2	28.10		**B5**	22500
	43	3178	1.0	32.35		**B5**	22410
18.5							
180M4 (1400 min^{-1})	**278**	597	1.4	5.03	**ITH132**	**B5**	11445
	230	738	1.2	6.09		**B5**	12090
	203	837	1.1	6.91		**B5**	12480
	186	910	1.0	7.51		**B5**	12692
	228	730	2.5	6.15	**ITH142**	**B5**	19590
	190	890	2.0	7.35		**B5**	20839
	158	1076	1.9	8.88		**B5**	22145
	144	1181	1.7	9.75		**B5**	22500
	135	1254	1.7	10.35		**B5**	22500
	120	1411	1.5	11.65		**B5**	22500
	110	1548	1.4	12.78		**B5**	22500
	99	1705	1.3	14.08		**B5**	22500
	85	1986	1.2	16.40		**B5**	22500
	79	2148	1.3	17.73		**B5**	22500
	69	2452	1.1	20.24		**B5**	22500
	54	3149	1.0	25.99		**B5**	20141

P_1 [kW]	n_2 [min^{-1}]	M_2 [Nm]	sf	i		IEC	R_2 [N]
22.0							
180L4 (1400 min^{-1})	**278**	710	1.2	5.03	**ITH132**	**B5**	10941
	230	878	1.0	6.09		**B5**	11394
	228	868	2.1	6.15	**ITH142**	**B5**	18992
	190	1059	1.7	7.35		**B5**	20034
	158	1280	1.6	8.88		**B5**	21065
	144	1404	1.4	9.75		**B5**	21474
	135	1491	1.4	10.35		**B5**	21693
	120	1678	1.3	11.65		**B5**	22000
	110	1840	1.2	12.78		**B5**	22097
	99	2028	1.1	14.08		**B5**	22028
	85	2362	1.0	16.40		**B5**	21475
	79	2555	1.1	17.73		**B5**	20928
	69	2916	1.0	20.24		**B5**	19494
30.0							
200L4 (1400 min^{-1})	**228**	1183	1.5	6.15	**ITH142**	**B5**	17626
	190	1444	1.2	7.35		**B5**	18195
	158	1745	1.1	8.88		**B5**	18598
	144	1915	1.0	9.75		**B5**	18625
	135	2033	1.0	10.35		**B5**	18568
	120	2288	0.9	11.65		**B5**	18247

Dimensioni ***Dimensions***

ITH 112 - ITH 113

ITH 112 U
ITH 113 U

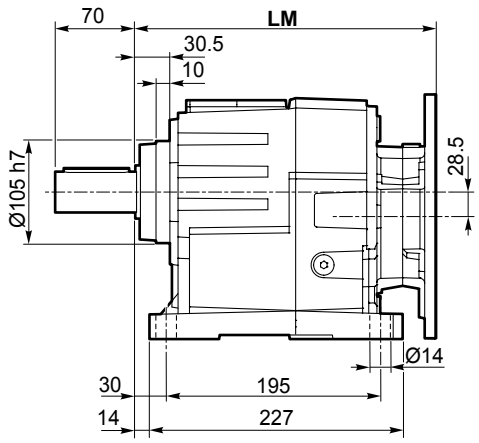

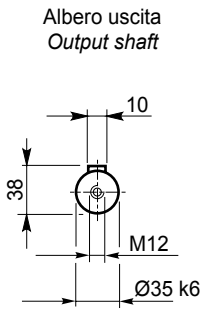

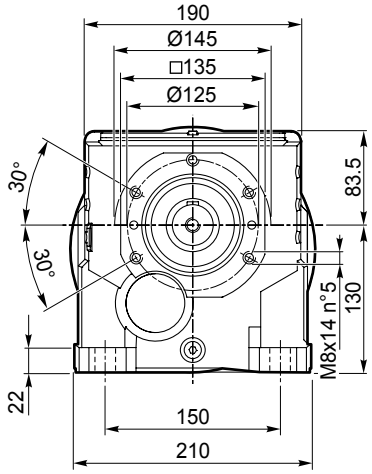

ITH 112 G
ITH 113 G

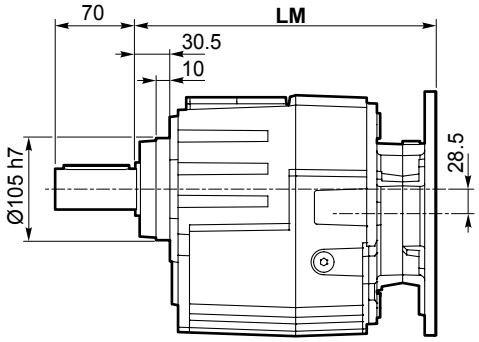

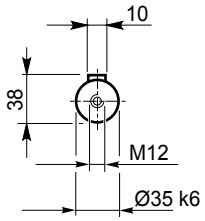

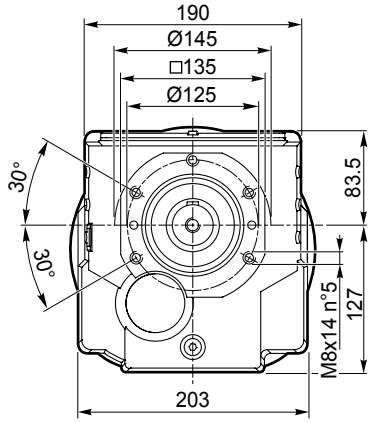

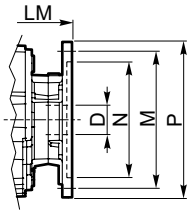

Dimensioni IEC / *IEC Dimensions*								
	71 B5	**80 B5**	**90 B5**	**90 B14**	**100/112 B5**	**100/112 B14**	**132 B5**	**132 B14**
LM	289			293,5	293	293,5	314	
N	110	130	130	95	180	110	230	130
M	130	165	165	115	215	130	265	165
P	160	200	200	130	250	160	300	200
D	14	19	24		28		38	

IEC Motori applicabili
IEC Motor adapters

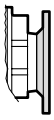

B7

ITHIS 112...
ITHIS 113...

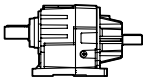

B28

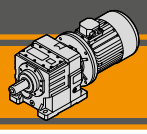

Dimensioni ***Dimensions***

ITH 112 - ITH 113

ITH 112 U/F...
ITH 113 U/F...

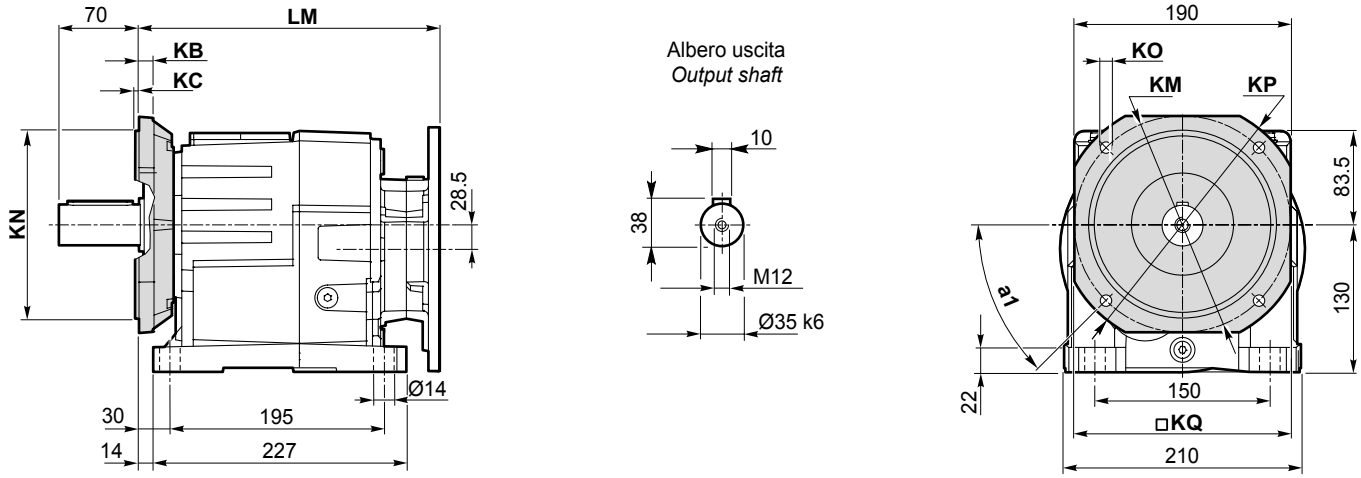

ITH 112 F...
ITH 113 F...

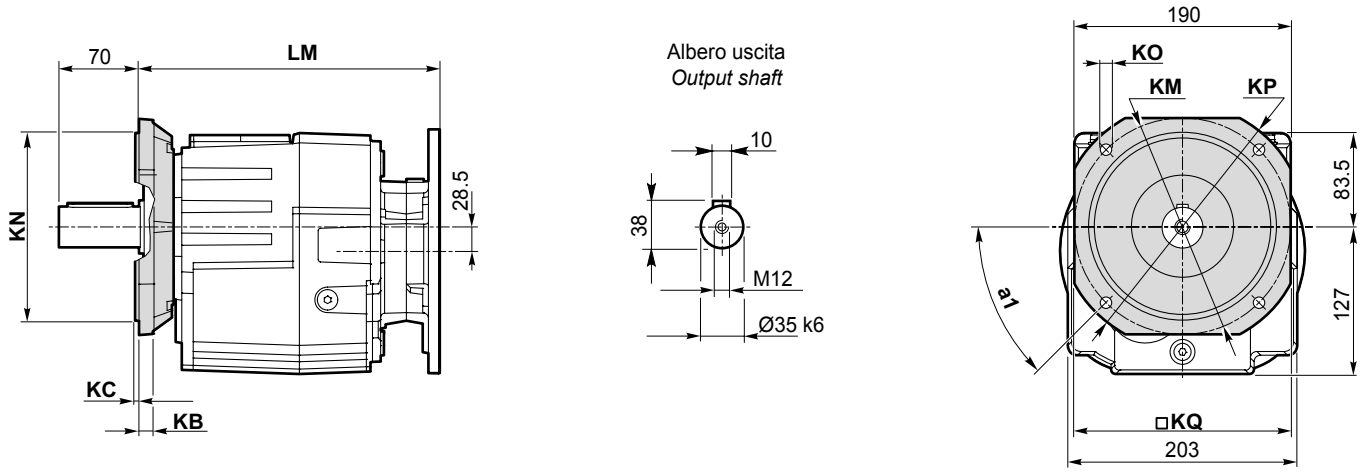

Versione **F** / ***F Version***										
ITH	**a_1**	**KB**	**KC**	**KM**	**KN** f7	**KO**	**KP**	**KQ**	**Flangia / *Flange*** Tipo / *Type*	**Peso / *Weight* [kg]**
112 113	45°	12	4	165	130	11	200	165	**F200**	**2.1**
	45°	12	4	215	180	14	250	215	**F250**	**3.2**

Peso / *Weight [kg]*								
ITH	**71 B5**	**80 B5**	**90 B5**	**90 B14**	**100/112 B5**	**100/112 B14**	**132 B5**	**132 B14**
112 U	28	29	29	28	30	28	34	31
112 G	26	27	27	26	29	26	32	29
113 U	28	29	29	28	-	-	-	-
113 G	27	28	28	27	-	-	-	-

Nota: peso del riduttore complessivo di olio per la posizione M1 (B3)
Note: weight of the gearbox filled with oil for M1 (B3) assembly position

Dimensioni ***Dimensions***

ITH 122 - ITH 123

ITH 122 U
ITH 123 U

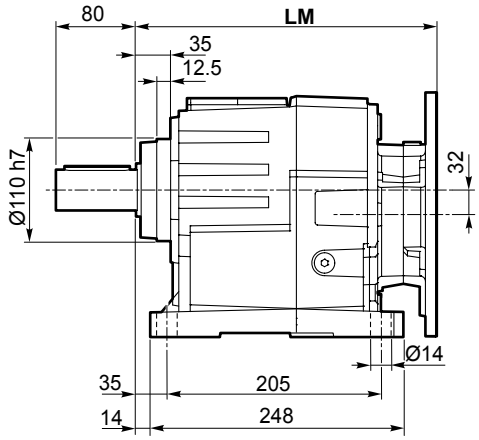

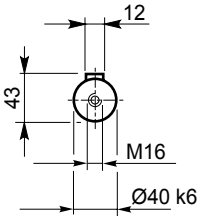

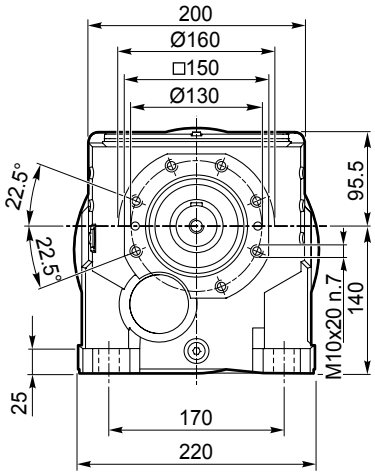

ITH 122 G
ITH 123 G

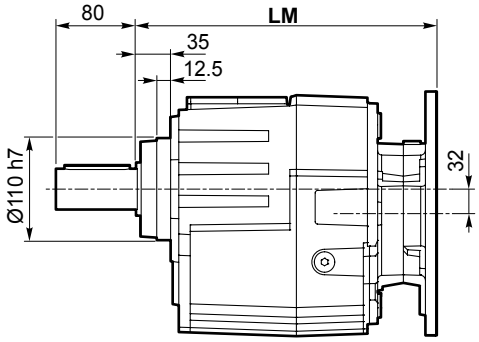

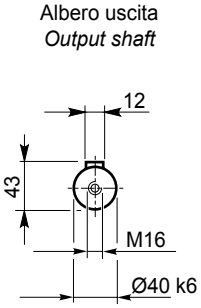

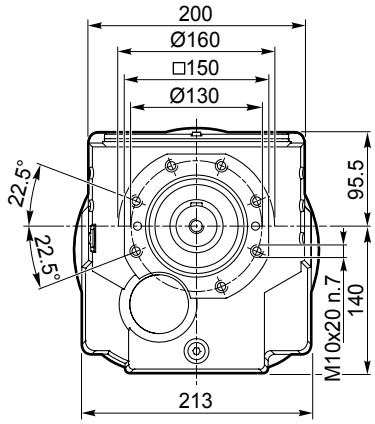

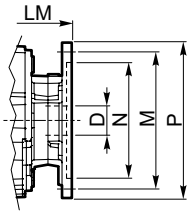

Dimensioni IEC / *IEC Dimensions*								
	71 B5	**80 B5**	**90 B5**	**90 B14**	**100/112 B5**	**100/112 B14**	**132 B5**	**132 B14**
LM	309.5			314	313.5	314	334.5	
N	110	130	130	95	180	110	230	130
M	130	165	165	115	215	130	265	165
P	160	200	200	130	250	160	300	200
D	14	19	24		28		38	

IEC Motori applicabili
IEC Motor adapters

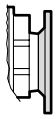

B8

ITHIS 122...
ITHIS 123...

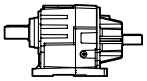

B28

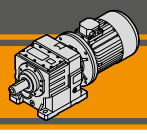

Dimensioni ***Dimensions***

ITH 122- ITH 123

ITH 122 U/F...
ITH 123 U/F...

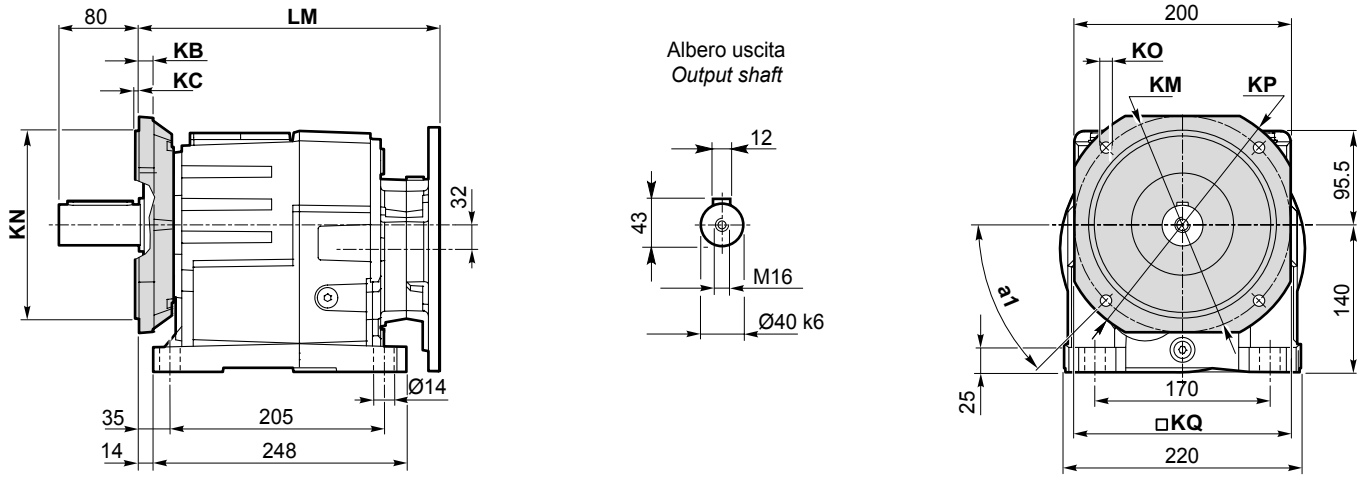

ITH 122 F...
ITH 123 F...

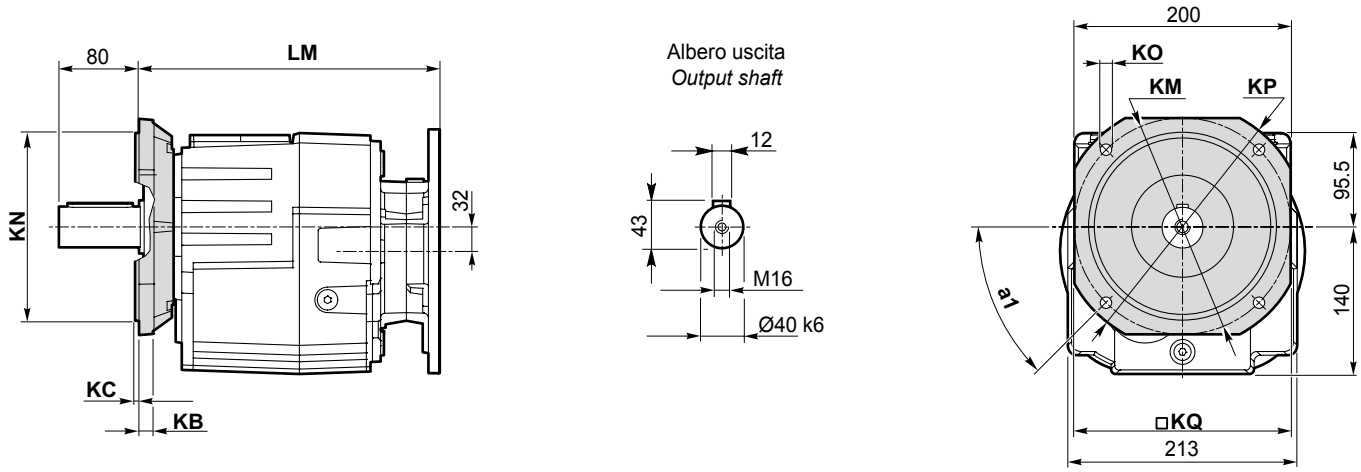

Versione **F** / ***F Version***										
ITH	**a_1**	**KB**	**KC**	**KM**	**KN** f7	**KO**	**KP**	**KQ**	**Flangia / *Flange*** Tipo / *Type*	**Peso / *Weight* [kg]**
122 123	45°	13	4	165	130	11	200	172	**F200**	**2.6**
	45°	13	4	215	180	14	250	215	**F250**	**3.8**
	45°	13	4	265	230	14	300	265	**F300**	**5.6**

Peso / *Weight [kg]*								
ITH	**71 B5**	**80 B5**	**90 B5**	**90 B14**	**100/112 B5**	**100/112 B14**	**132 B5**	**132 B14**
122 U	-	36	36	35	38	35	41	38
122 G	-	34	34	33	36	33	39	36
123 U	36	37	37	36	39	36	-	-
123 G	34	35	35	34	37	34	-	-

Nota: peso del riduttore complessivo di olio per la posizione M1 (B3)
Note: weight of the gearbox filled with oil for M1 (B3) assembly position

Dimensioni ***Dimensions***

ITH 132 - ITH 133

ITH 132 U
ITH 133 U

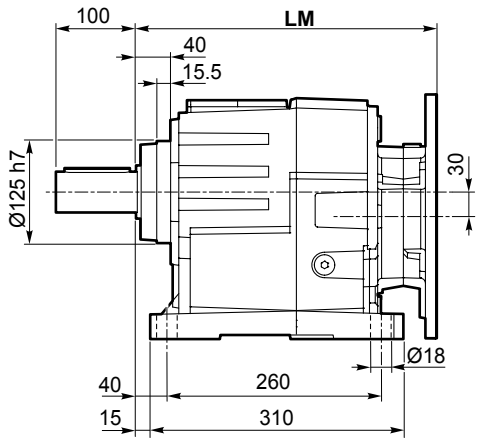

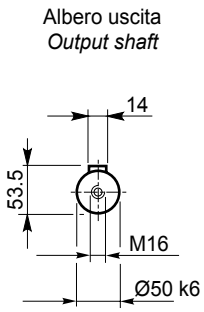

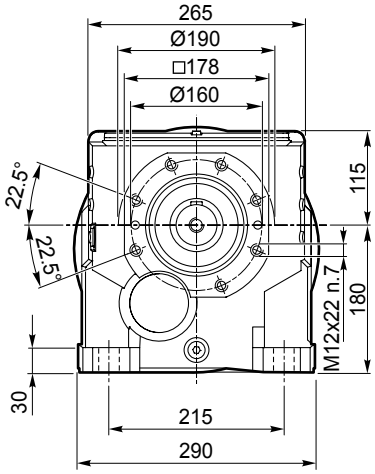

ITH 132 G
ITH 133 G

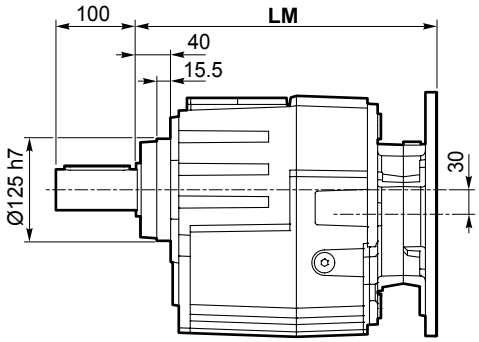

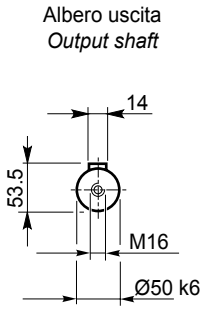

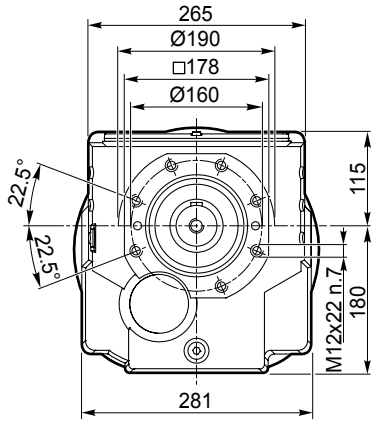

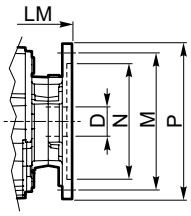

Dimensioni IEC / *IEC Dimensions*									
	80 B5	**90 B5**	**90 B14**	**100/112 B5**	**100/112 B14**	**132 B5**	**132 B14**	**160 B5**	**180 B5**
LM	340.5		345	344.5	345	365.5		415.5	
N	130		95	180	110	230	130	250	
M	165		115	215	130	265	165	300	
P	200		140	250	160	300	200	350	
D	19	24		28		38		42	48

IEC Motori applicabili
IEC Motor adapters

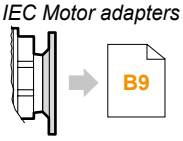

ITHIS 132...
ITHIS 133...

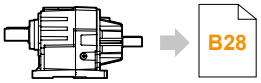

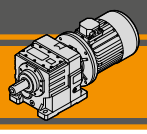

Dimensioni ***Dimensions***

ITH 132- ITH 133

ITH 132 U/F...
ITH 133 U/F...

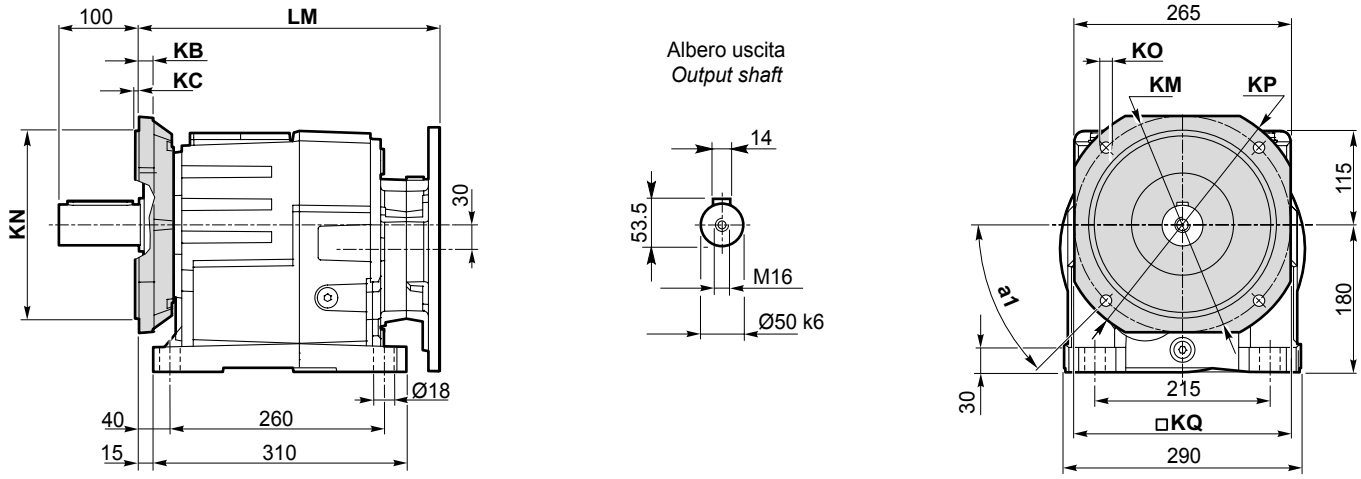

ITH 132 F...
ITH 133 F...

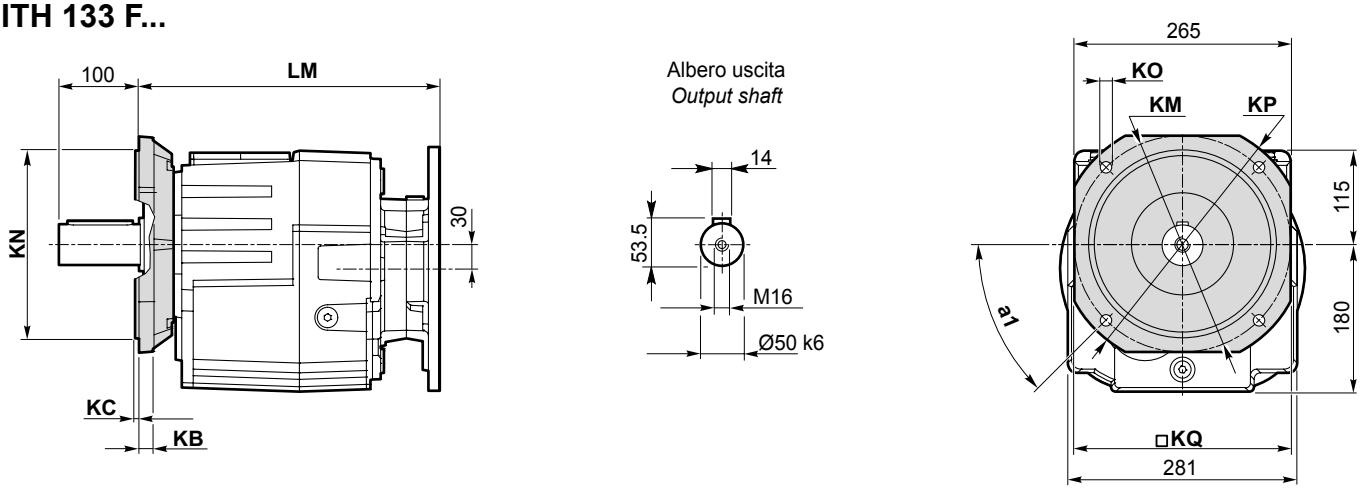

Versione **F** / ***F Version***										
ITH	**a_1**	**KB**	**KC**	**KM**	**KN** f7	**KO**	**KP**	**KQ**	**Flangia / *Flange*** Tipo / *Type*	**Peso / *Weight* [kg]**
132 133	45°	16	4	215	180	14	250	215	**F250**	**4.8**
	45°	16	4	265	230	14	300	260	**F300**	**7.1**
	45°	16	4	300	250	18	350	300	**F350**	**9.1**

Peso / *Weight [kg]*									
ITH	**80 B5**	**90 B5**	**90 B14**	**100/112 B5**	**100/112 B14**	**132 B5**	**132 B14**	**160 B5**	**180 B5**
132 U	67		66	68	66	72	69	83	
132 G	63		62	64	62	68	65	79	
133 U	69		68	70	68	74	71	-	-
133 G	65		64	66	64	70	67	-	-

Nota: peso del riduttore complessivo di olio per la posizione M1 (B3)
Note: weight of the gearbox filled with oil for M1 (B3) assembly position

Dimensioni *Dimensions*

ITH 142 - ITH 143

ITH 142 U
ITH 143 U

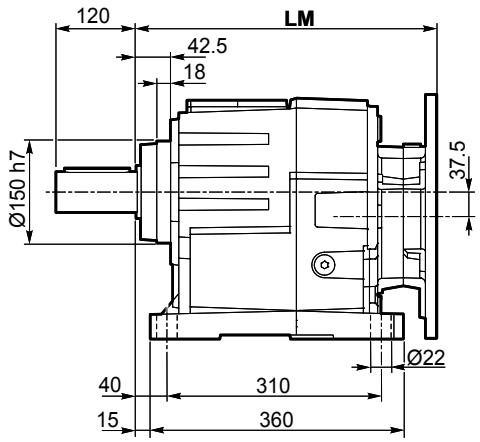

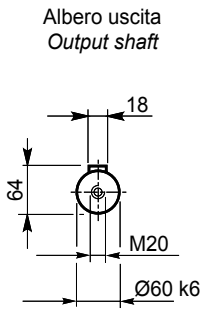

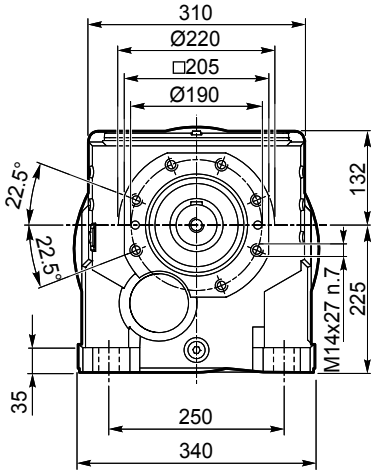

ITH 142 G
ITH 143 G

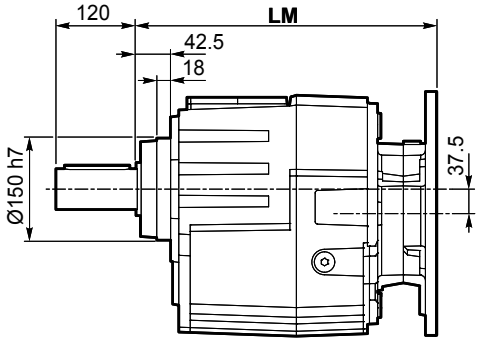

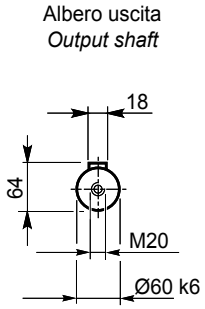

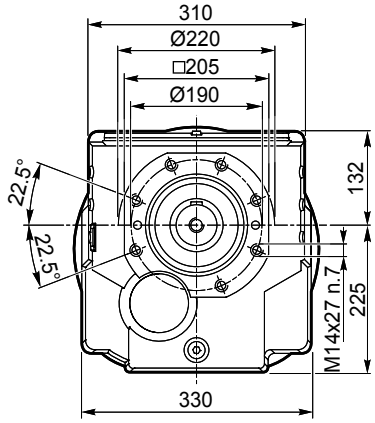

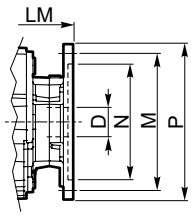

Dimensioni IEC / *IEC Dimensions*										
	80 B5	**90 B5**	**90 B14**	**100/112 B5**	**100/112 B14**	**132 B5**	**132 B14**	**160 B5**	**180 B5**	**200 B5**
LM	373.5		378	377.5	378	398.5		448.5		460.5
N	130		95	180	110	230	130	250		300
M	165		115	215	130	265	165	300		350
P	200		140	250	160	300	200	350		400
D	19	24		28		38		42	48	55

IEC Motori applicabili
IEC Motor adapters

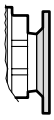

B10

ITHIS 142...
ITHIS 143...

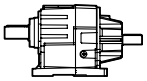

B28

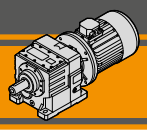

ITH 142- ITH 143

ITH 142 U/F...
ITH 143 U/F...

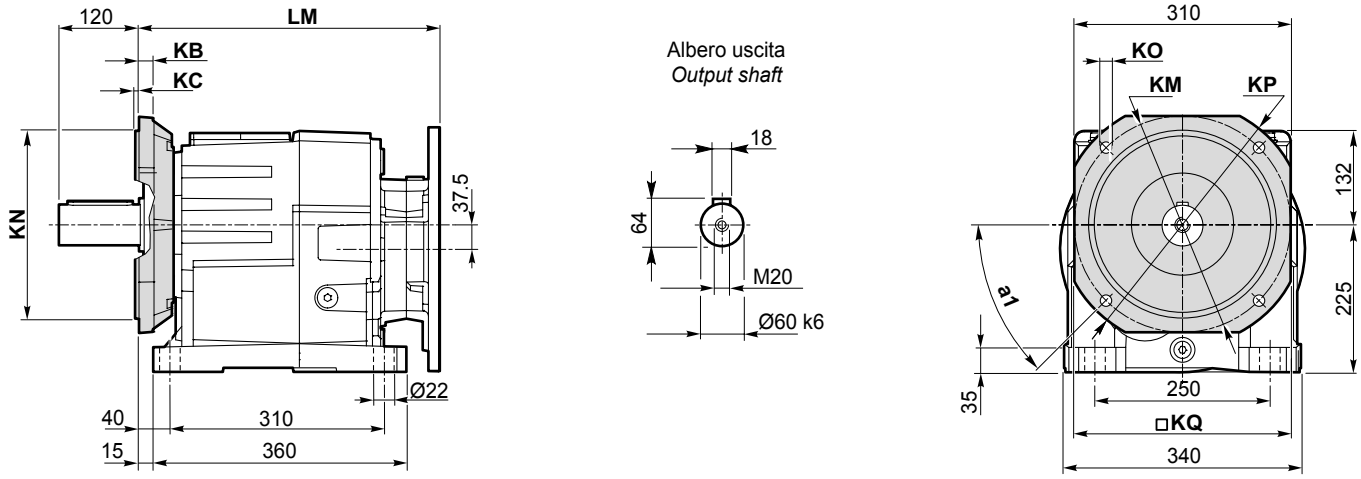

ITH 142 F...
ITH 143 F...

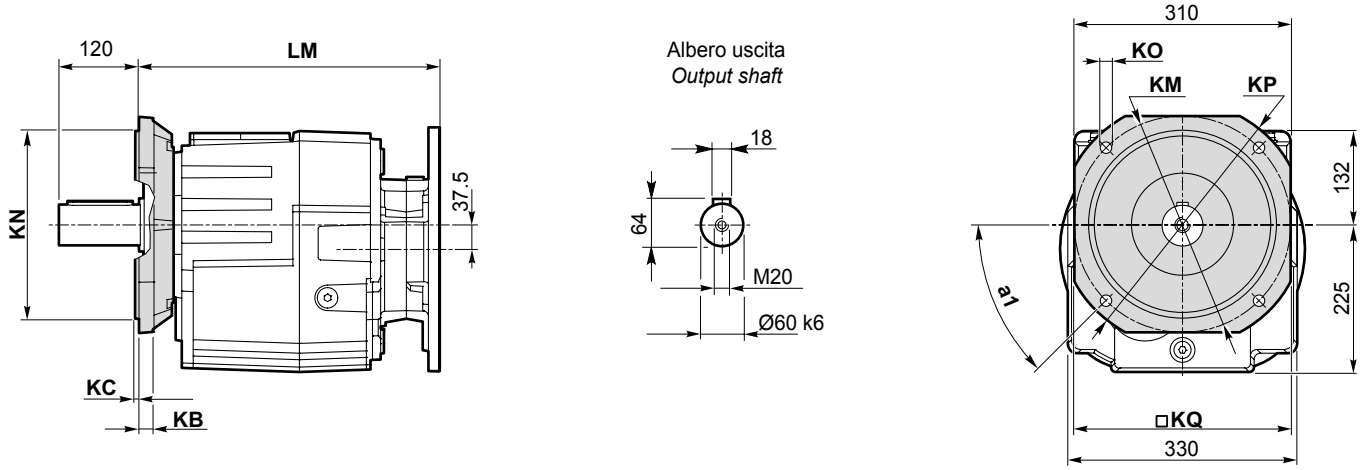

Versione **F** / ***F*** *Version*										
ITH	**a_1**	**KB**	**KC**	**KM**	**KN** f7	**KO**	**KP**	**KQ**	**Flangia / *Flange*** Tipo / *Type*	**Peso / *Weight* [kg]**
142 143	45°	18	4	265	230	14	300	265	**F300**	**7.4**
	45°	18	5	300	250	18	350	300	**F350**	**10.2**
	45°	18	5	400	350	18	450	400	**F450**	**16.9**

Peso / *Weight [kg]*										
ITH	**80 B5**	**90 B5**	**90 B14**	**100/112 B5**	**100/112 B14**	**132 B5**	**132 B14**	**160 B5**	**180 B5**	**200 B5**
142 U	-	-	-	105	102	108	105	119		129
142 G	-	-	-	99	96	102	99	113		123
143 U	106		105	108	105	111	108	-	-	-
143 G	100		99	102	99	105	102	-	-	-

Nota: peso del riduttore complessivo di olio per la posizione M1 (B3)
Note: weight of the gearbox filled with oil for M1 (B3) assembly position

Dimensioni — *Dimensions*

ITHIS...

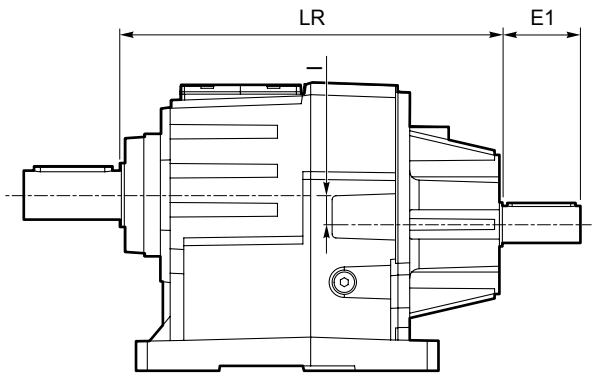

Albero entrata
Input shaft

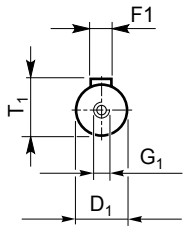

ITHIS	Versione *Version*	LR	D1	E1	I	T1	F1	G1
112	U G U/F... F...	321.5	28	60	28.5	31	8	M10
113		321.5	24	50	28.5	27	8	M8
122		342	28	60	32	31	8	M10
123		342	28	60	32	31	8	M10
132		390.5	38	80	30	41	10	M12
133		373	28	60	30	31	8	M10
142		423.5	38	80	37.5	41	10	M12
143		406	28	60	37.5	31	8	M10

ITHIS	Peso / *Weight* [kg]
112 U	29
112 G	28
113 U	30
113 G	28
122 U	37
122 G	35
123 U	38
123 G	36
132 U	73
132 G	69
133 U	69
133 G	65
142 U	110
142 G	104
143 U	107
143 G	101

Accessori — *Accessories*

Dispositivo antiretro / *Backstop device*

ITH...CW
ITH...CCW

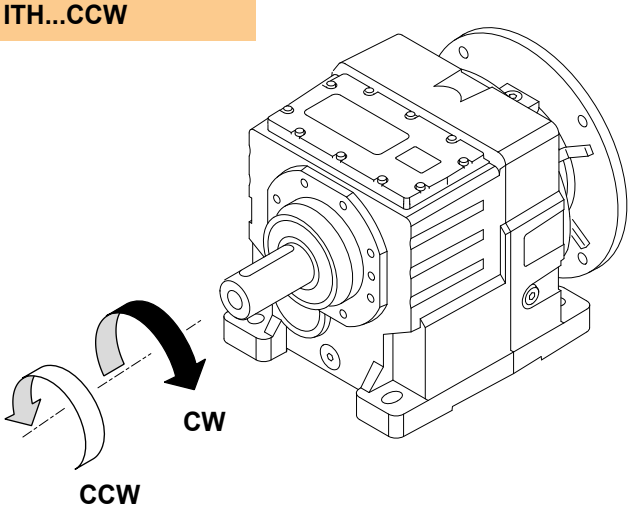

Il dispositivo antiretro permette la rotazione dell'albero in un solo senso senza creare ingombri aggiuntivi.
Prima di utilizzarlo è necessario specificare il senso di rotazione dell'albero di uscita come mostrato in figura.

The backstop device allows the output shaft to rotate in just one direction. Before using it, please specify output shaft rotation direction as shown in the figure.