TRANSTECNO®
the modular gearmotor

ITS

ITS

ITS Iron

Motoriduttori pendolari
Helical parallel gearmotors

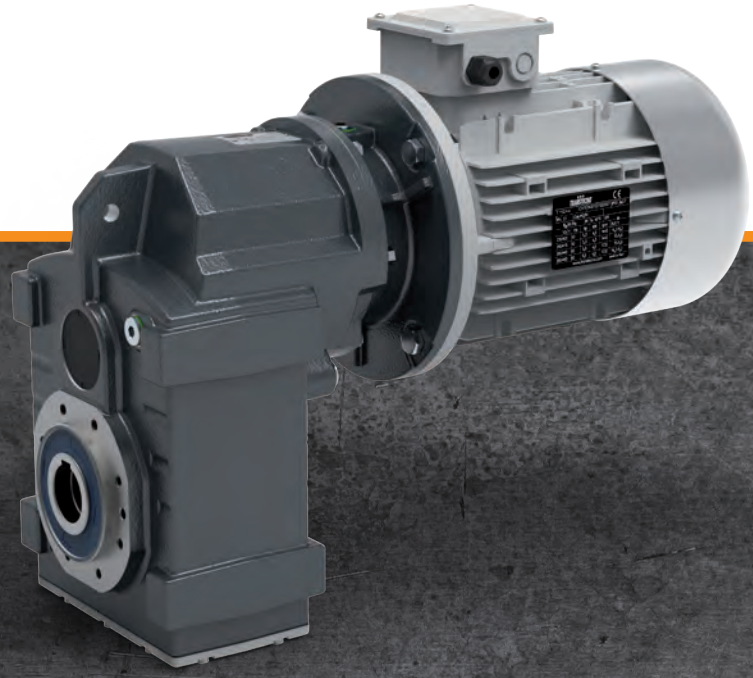

TRANSTECNO · GENUINE · PRODUCTS

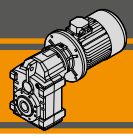

ENERGY SAVING

Indice	*Index*	Pag. *Page*
Caratteristiche tecniche	*Technical features*	**D2**
Versioni	*Versions*	**D2**
Designazione	*Classification*	**D3**
Sensi di rotazione	*Direction of rotation*	**D4**
Simbologia	*Symbols*	**D4**
Lubrificazione	*Lubrication*	**D5**
Carichi radiali	*Radial loads*	**D6**
Dati tecnici	*Technical data*	**D8**
Dimensioni	*Dimensions*	**D18**
Accessori	*Accessories*	**D25**

Questa sezione annulla e sostituisce ogni precedente edizione o revisione. Qualora questa sezione non Vi sia giunta in distribuzione controllata, l'aggiornamento dei dati ivi contenuto non è assicurato. **In tal caso la versione più aggiornata è disponibile sul nostro sito internet www.transtecno.com**

This section replaces any previous edition and revision. If you obtained this catalogue other than through controlled distribution channels, the most up to date content is not guaranteed. ***In this case the latest version is available on our web site www.transtecno.com***

Caratteristiche tecniche

I motoriduttori della serie ITS sono dedicati ad applicazioni industriali che presentano carichi particolarmente gravosi. La costruzione robusta con carcassa in ghisa e l'elevata modularità dei diversi kit di entrata e di uscita li rendono adatti ad ogni tipo di applicazione.

Caratteristiche comuni a tutta la serie sono:

- Costruzione robusta con carcassa in ghisa
- Elevata modularità
- Lubrificazione con olio sintetico
- Accoppiamento al motore tramite giunto elastico
- Verniciatura a polvere epossidica RAL 7016 di spessore medio 0,10 – 0,15 mm

Technical features

The ITS gearmotors are intended for heavy duty applications. The robust one pieces casing of the main housing and the modular design of input and output sets increase application fexibility.

The main features of ITS range are:

- *Robust cast iron housings*
- *High degree of modularity*
- *Lubrication with synthetic oil*
- *Coupled to motor with flexible coupling*
- *Epoxy powder coating RAL 7016 average thickness 0,10 – 0,15 mm.*

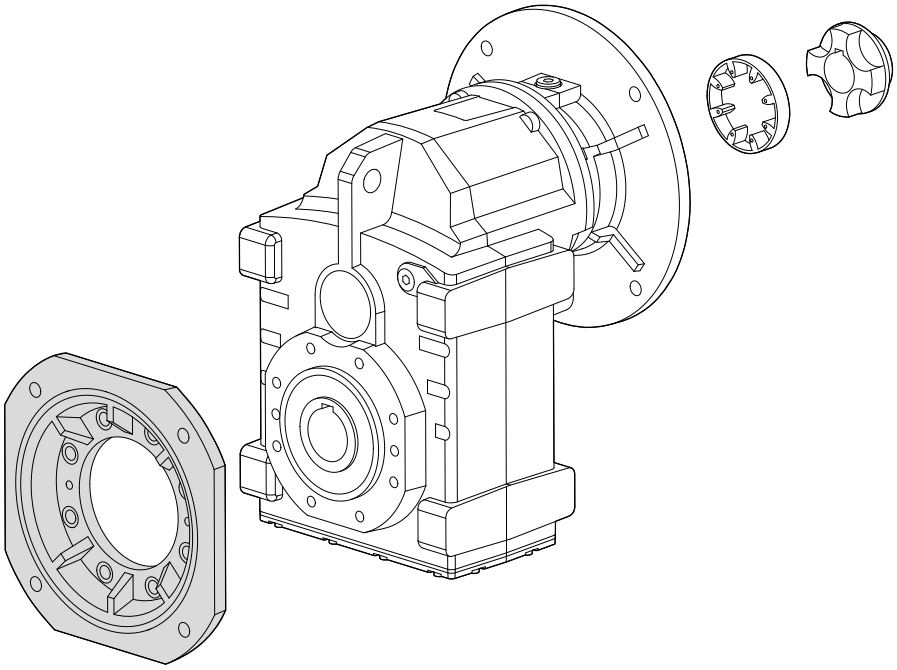

Versioni

Versions

ITS...

Versione Riduttore
Gearbox Version

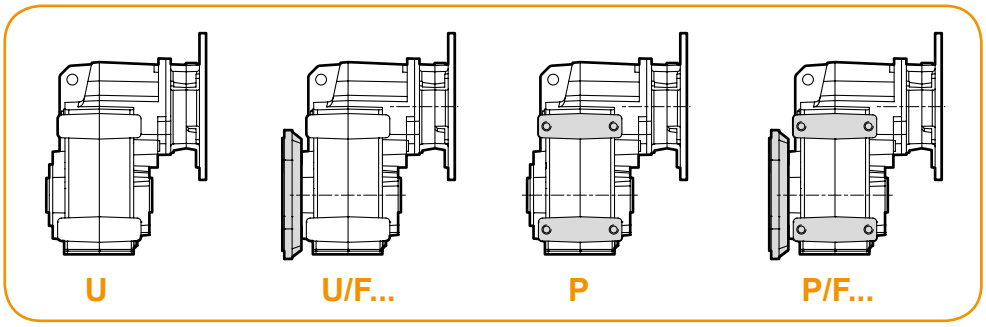

Albero di uscita
Output shaft

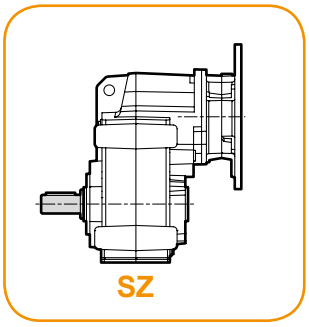

ITSIS...

Versione Riduttore
Gearbox Version

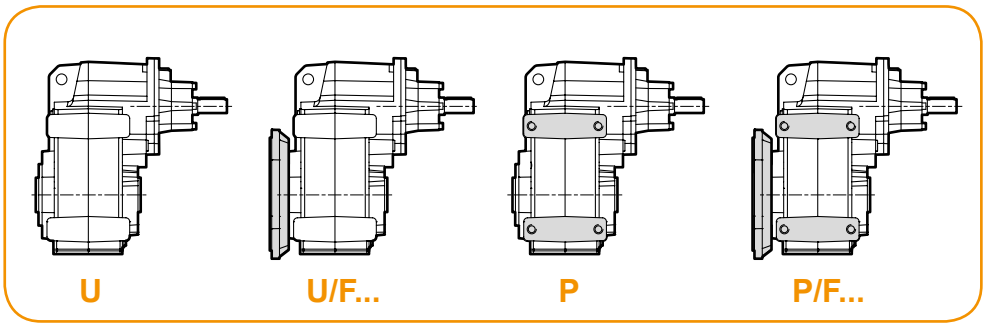

Albero di uscita
Output shaft

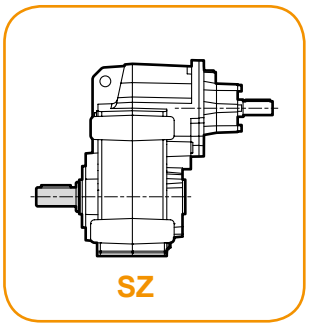

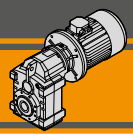

Designazione

Classification

RIDUTTORE / *GEARBOX*

ITS	92	2	U	22.92	D40	132	B5	SZ	M1	CW
Tipo *Type*	Grandezza *Size*	Stadi *Stages*	Versione *Version*	Rapporto *Ratio*	Albero uscita *Output shaft*	IEC	Forma costruttiva *Version*	Albero uscita maschio *Solid outout shaft*	Posizione di montaggio *Mounting position*	Dispositivo antiretro *Backstop device*
ITS	**92** **93** **94**	**2** **3**	**U...** **U/F...** **P...** **P/F...**	vedi tabelle *see tables*	vedi tabelle *see tables*	**80..** **—** **180..**	**B5** **B14**	**SZ**	**M1 (B3)** **M2 (V6)** **M3 (B8)** **M4 (V5)** **M5 (B7)** **M6 (B6)**	**CW** **CCW**

RIDUTTORE / *GEARBOX*

ITSIS	92	2	U	22.92	D40	SZ	M1
Tipo *Type*	Grandezza *Size*	Stadi *Stages*	Versione *Version*	Rapporto *Ratio*	Albero uscita *Output shaft*	Albero uscita maschio *Solid outout shaft*	Posizione di montaggio *Mounting position*
ITSIS	**92** **93** **94**	**2** **3**	**U...** **U/F...** **P...** **P/F...**	vedi tabelle *see tables*	vedi tabelle *see tables*	**SZ**	**M1 (B3)** **M2 (V6)** **M3 (B8)** **M4 (V5)** **M5 (B7)** **M6 (B6)**

MOTORE / *MOTOR*

5,5 kW	4p	3ph	230/400V	50Hz	T1
Potenza *Power*	Poli *Poles*	Fasi *Phases*	Tensione *Voltage*	Frequenza *Frequency*	Pos. morsettiera *Terminal box pos.*
vedi tabelle *see tables*	**2p** **4p** **6p** **8p**	**1ph** **3ph**	**230/400V** **220/380V** **...** **230V**	**50Hz** **60Hz**	**T1** (Std) **T4** **T2** **T3**

Sensi di rotazione — *Direction of rotation*

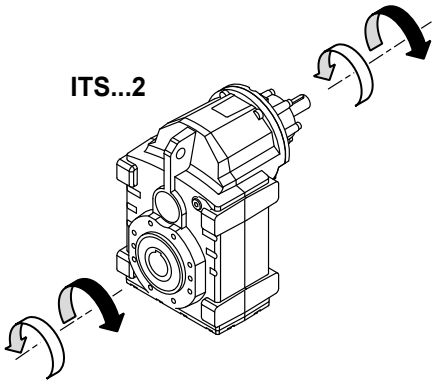

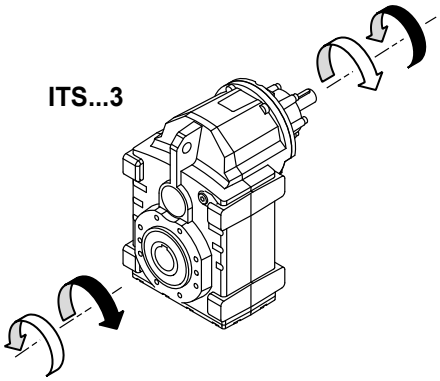

Simbologia — *Symbols*

n_1	[min^{-1}]	Velocità in ingresso / *Input speed*
n_2	[min^{-1}]	Velocità in uscita / *Output speed*
i		Rapporto di riduzione / *Ratio*
P_1	[kW]	Potenza in entrata / *Input power*
M_2	[Nm]	Coppia nominale in uscita in funzione di P_1 / *Output torque referred to P_1*
Pn_1	[kW]	Potenza nominale in entrata / *Nominal input power*
Mn_2	[Nm]	Coppia nominale in uscita in funzione di Pn_1 / *Nominal output torque referred to Pn_1*
sf		Fattore di servizio / *Service factor*
R_1	[N]	Carico radiale ammissibile in entrata / *Permitted input radial load*
A_1	[N]	Carico assiale ammissibile in entrata / *Permitted input axial load*
R_2 U	[N]	Carico radiale ammissibile in uscita per la versione “U...” / *Permitted output radial load for “U...” version*
R_2 P	[N]	Carico radiale ammissibile in uscita per la versione “P...” / *Permitted output radial load for “P...” version*
R_2	[N]	Carico radiale ammissibile in uscita / *Permitted output radial load*
A_2	[N]	Carico assiale ammissibile in uscita / *Permitted output axial load*

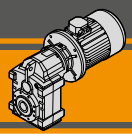

Lubrificazione

Lubrication

I motoriduttori della serie ITS sono forniti completi di lubrificante sintetico viscosità 320. La quantità di lubrificante dipende dalla posizione di montaggio.

ITS series gearmotors come complete with synthetic lubricant 320 viscosity. The lubricant quantity depends on assembly position.

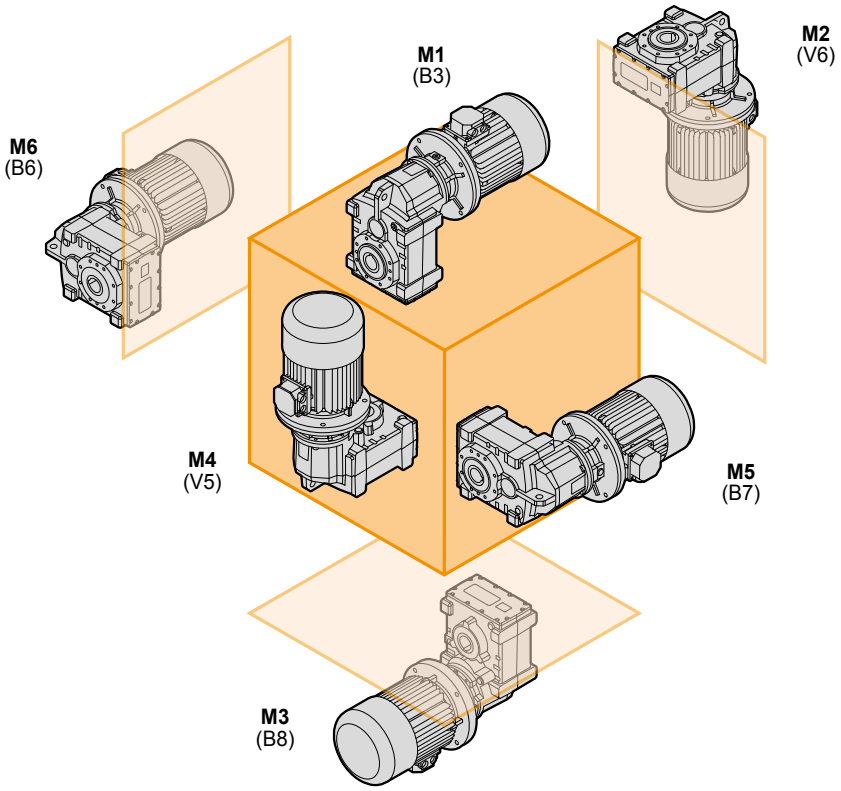

ITS	Quantità di olio (litri) / *Oil quantity (litres)*					
	M1 (B3)	**M2** (V6)	**M3** (B8)	**M4** (V5)	**M5** (B7)	**M6** (B6)
922	3,4	5,2	4,2	6,1	3,7	3,6
923	4,9					
932	4,7	7,0	4,3	7,7	4,5	4,4
933	6,7					
942	9,1	14,4	9,1	15,4	9,1	8,9
943	12,0					

ITSIS	Quantità di olio (litri) / *Oil quantity (litres)*					
	M1 (B3)	**M2** (V6)	**M3** (B8)	**M4** (V5)	**M5** (B7)	**M6** (B6)
922	3,6	5,6	4,4	6,1	3,9	3,8
923	5,1					
932	4,9	7,4	4,7	7,7	4,7	4,6
933	6,9					
942	9,3	15,1	9,8	15,4	9,5	9,3
943	12,2	14,8	9,5	15,4	9,3	9,1

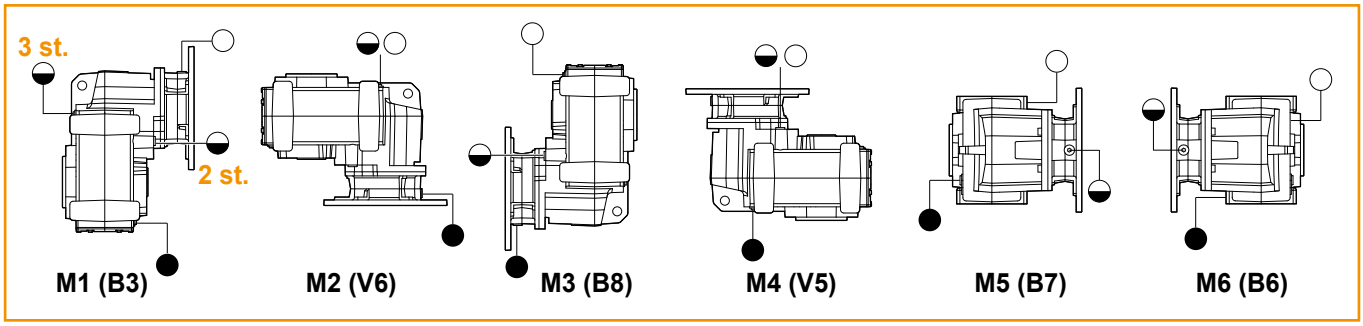

○ Sfiato e tappo di riempimento / *Breather and filling plug*
◒ Livello olio / *Oil level plug*
● Tappo di scarico / *Oil drain plug*

Carichi radiali in entrata — *Input Radial loads*

ITS 922 ITS 923 -932 ITS 933 - 943	n_1 [min^{-1}]	Potenza motore/ *Motor Power [kW]*			
		2.2	**3.0**	**4.0**	**5.5**
R_1 [N]	1400	1800			750
	900	2100		1200	-
	500	2500	-	-	-

ITS 942	n_1 [min^{-1}]	Potenza motore/ *Motor Power [kW]*					
		5.5	**7.5**	**9.2**	**11.0**	**15.0**	**18.5**
R_1 [N]	1400	3700				2800	1200
	900	4900			3300	650	-
	500	5250	3900	1300	-	-	-

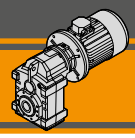

I carichi radiali uscita massimi applicabili sono riportati nelle tabelle precedenti.
Quando il carico radiale risultante non è applicato sulla mezzeria dell'albero occorre calcolare quello effettivo con la seguente formula:

The radial loads maximum output applicable are indicated in the previous tables.
When the resulting radial load is not applied on the centre line of the shaft it is necessary to calculate the effective load with the following formula:

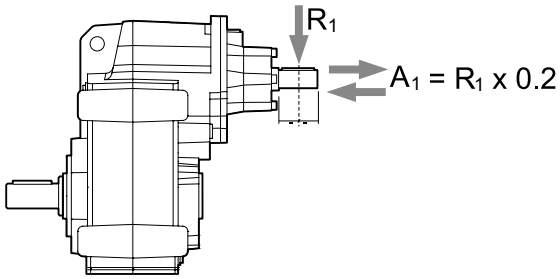

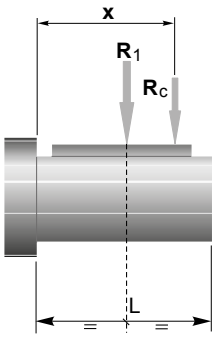

	ITS922	ITS923	ITS932	ITS933	ITS942	ITS943
a	139				157	139
b	110				118	110

$$R_c = \frac{R_1 \cdot a}{(b+x)} \leq R_1$$

$$R \leq R_c$$

a, b = valori riportati nella tabella
a, b = values given in the table

Carichi radiali in uscita

Output radial loads

I carichi radiali uscita massimi applicabili sono riportati nelle tabelle dati tecnici.
Quando il carico radiale risultante non è applicato sulla mezzeria dell'albero occorre calcolare quello effettivo con la seguente formula:

The radial loads maximum output applicable are indicated in the technical data table.
When the resulting radial load is not applied on the centre line of the shaft it is necessary to calculate the effective load with the following formula:

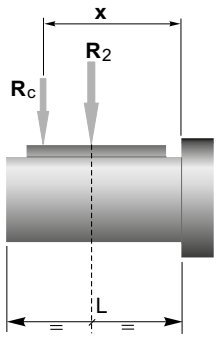

ITS	922 U... 923 U...	922 P... 923 P...	932 U... 933 U...	932 P... 933 P...	942 U... 943 U...	942 P... 943 P...
a	190	182	224	216	262	252
b	150	142	174	166	202	192
R_{2MAX}	9500	18000	12000	23000	15000	31000

$$R_c = \frac{R_2 \cdot a}{(b+x)} \leq R_{2MAX}$$

$$R \leq R_c$$

a, b = valori riportati nella tabella
a, b = values given in the table

La versione U utilizza cuscinetti a sfere sull'asse di uscita mentre la versione P utilizza cuscinetti a rulli conici.
E' possibile utilizzare cuscinetti a rulli conici anche sulla versione U a richiesta.

U version has ball bearings on the output side.
P version uses taper roller bearings.
It's possible to have taper roller bearings for U version upon request.

Dati tecnici — n_1 1400 min^{-1} — *Technical data*

n_2 [min^{-1}]	Mn_2 [Nm]	Pn_1 [kW]	i	R_2 U [N]	R_2 P [N]	IEC Motori applicabili / *IEC Motor adapters*				
ITSIS 922						**ITS 922**				
						80B5	**90B5/B14**	**100B5/B14**	**112B5/B14**	**132B5/B14**
248	500	13.50	5.66	2492	9368					
198	500	10.82	7.06	2835	10580					
167	500	9.13	8.37	3131	11619					
153	650	10.87	9.13	3078	11708					
134	650	9.51	10.43	3327	12602					
116	650	8.24	12.04	3618	13638					
104	750	8.48	13.50	3685	14122					
90	750	7.39	15.50	3994	15236					
79	900	7.72	17.81	4012	15753					
64	900	6.32	21.73	4506	17576					
61	900	6.00	22.92	4648	18095					
59	900	5.78	23.80	4751	18500					
53	900	5.16	26.63	5073	18500					*
48	900	4.70	29.26	5360	18500					*
44	1000	4.75	32.14	5361	18500					*
40	1000	4.43	35.19	5652	18500					*
36	1000	3.96	39.38	6035	18500					*
32	1000	3.60	43.27	6376	18500					*
30	1000	3.28	47.50	6733	18500				*	*
25	1100	3.07	55.96	6992	18500				*	
23	1100	2.80	61.25	7371	18500				*	
21	1100	2.54	67.50	7800	18500				*	
ITSIS 923						**ITS 923**				
						71B5	**80B5**	**90B5/B14**	**100B5/B14**	**112B5/B14**
19	1100	2.29	75.00	8295	18500					*
16	1100	1.99	86.28	9001	18500				*	*
15	1100	1.82	94.46	9500	18500				*	*
13	1100	1.58	108.48	9500	18500				*	*
12	1100	1.44	118.77	9500	18500				*	*
9.9	1100	1.22	140.93	9500	18500				*	*
9.1	1100	1.11	154.30	9500	18500				*	*
8.1	1100	1.00	172.40	9500	18500				*	*
7.4	1100	0.91	188.76	9500	18500			*	*	*
6.6	1100	0.81	211.15	9500	18500			*	*	*
5.9	1100	0.72	238.53	9500	18500			*	*	*
5.1	1100	0.63	272.74	9500	18500			*	*	*
4.8	1100	0.59	289.29	9500	18500			*	*	*
4.4	1100	0.54	316.73	9500	18500			*	*	*
4.1	1100	0.50	342.86	9500	18500		*	*	*	*
3.7	1100	0.46	375.38	9500	18500		*	*	*	*

N.B.
Le aree evidenziate indicano l'applicabilità della corrispondente grandezza motore.

*** =** Il fattore di servizio (**sf**) deve essere scelto in funzione dell'applicazione: si prega di contattare il nostro Servizio Tecnico.

Prima di eseguire la scelta del motoriduttore riferirsi alle prestazioni elencate nelle tabelle dalla pag. D11 alla pag. D17.

N.B.
Highlighted areas indicate motor inputs available on each size of unit.

**** =** The service factor (**sf**) has to be selected depending on application: please contact our Technical Department.*

Before selecting any gearbox, please read the performance values shown in the tables on page D11 to D17.

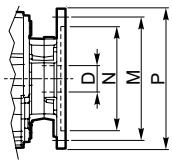

Dimensioni IEC / *IEC Dimensions*

	71 B5	80 B5	90 B5	90 B14	100/112 B5	100/112 B14	132 B5	132 B14
N	110	130	130	95	180	110	230	130
M	130	165	165	115	215	130	265	165
P	160	200	200	140	250	160	300	200
D	14	19	24		28		38	

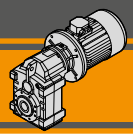

Dati tecnici — n_1 1400 min^{-1} — *Technical data*

IEC Motori applicabili
IEC Motor adapters

ITSIS 932 / ITS 932

	n_2 [min^{-1}]	Mn_2 [Nm]	Pn_1 [kW]	i	R_2 U [N]	R_2 P [N]	80B5	90B5/B14	100B5/B14	112B5/B14	132B5/B14	160B5
228	850	21.16	6.13	2770	11626							
183	850	16.96	7.65	3152	13130							
155	850	14.37	9.03	3472	14386							
141	900	13.88	9.90	3606	14984							
124	900	12.20	11.27	3889	16091							
107	900	10.52	13.06	4238	17453							
96	900	9.43	14.58	4519	18541							*
83	1000	9.09	16.81	4754	19661							*
73	1000	7.94	19.24	5144	21179							*
59	1200	7.77	23.57	5412	22749							*
57	1200	7.40	24.75	5568	23000							*
54	1400	8.28	25.81	5306	23000							
49	1400	7.40	28.88	5665	23000							
40	1650	7.26	34.71	5714	23000							*
37	1650	6.63	38.01	6024	23000							
33	1650	6.05	42.53	6432	23000							
30	1650	5.51	46.73	6796	23000							
27	1650	5.02	51.30	7176	23000							
23	1650	4.26	60.44	7896	23000							
21	1650	3.89	66.15	8323	23000							
19	1500	3.21	72.90	9358	23000				*			

ITSIS 933 / ITS 933

	n_2 [min^{-1}]	Mn_2 [Nm]	Pn_1 [kW]	i	R_2 U [N]	R_2 P [N]	71B5	80B5	90B5/B14	100B5/B14	112B5/B14
17	1700	3.27	81.00	9172	23000						*
15	1700	2.85	93.18	9953	23000						*
14	1700	2.60	102.02	10493	23000						*
12	1700	2.26	117.16	11376	23000						*
11	1700	2.07	128.28	12000	23000						*
9.2	1700	1.74	152.21	12000	23000					*	*
8.4	1700	1.59	166.65	12000	23000					*	*
7.5	1700	1.42	186.19	12000	23000					*	*
6.9	1700	1.30	203.86	12000	23000					*	*
6.1	1700	1.16	228.05	12000	23000					*	*
5.4	1700	1.03	257.61	12000	23000					*	*
4.8	1700	0.90	294.56	12000	23000				*	*	*
4.5	1700	0.85	312.43	12000	23000				*	*	*
4.1	1700	0.78	342.07	12000	23000				*	*	*
3.8	1700	0.72	370.29	12000	23000				*	*	*
3.5	1700	0.65	405.42	12000	23000				*	*	*

N.B.
Le aree evidenziate indicano l'applicabilità della corrispondente grandezza motore.

* = Il fattore di servizio (**sf**) deve essere scelto in funzione dell'applicazione: si prega di contattare il nostro Servizio Tecnico.

Prima di eseguire la scelta del motoriduttore riferirsi alle prestazioni elencate nelle tabelle dalla pag. D11 alla pag. D17.

N.B.
Highlighted areas indicate motor inputs available on each size of unit.

* = *The service factor (**sf**) has to be selected depending on application: please contact our Technical Department.*

Before selecting any gearbox, please read the performance values shown in the tables on page D11 to D17.

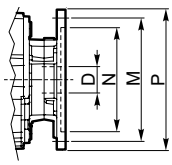

Dimensioni IEC / *IEC Dimensions*

	71 B5	80 B5	90 B5	90 B14	100/112 B5	100/112 B14	132 B5	132 B14	160 B5
N	110	130	130	95	180	110	230	130	250
M	130	165	165	115	215	130	265	165	300
P	160	200	200	140	250	160	300	200	350
D	14	19	24		28		38		42

Dati tecnici — n_1 1400 min^{-1} — *Technical data*

	n_2 [min^{-1}]	Mn_2 [Nm]	Pn_1 [kW]	i	R_2 U [N]	R_2 P [N]	IEC Motori applicabili / *IEC Motor adapters*					
ITSIS 942							**ITS 942**					
							90B5/B14	**100B5/B14**	**112B5/B14**	**132B5/B14**	**160B5**	**180B5**
177	1500	28.90	7.93	4206	17268							
146	1500	23.89	9.59	4701	19178							
131	1700	24.34	10.67	4816	19916							
118	1700	21.96	11.82	5113	21074		*	*	*			
109	2000	23.66	12.91	5070	21422							
99	2000	21.49	14.21	5364	22590							
88	2400	23.04	15.91	5258	22990							
81	2400	21.15	17.33	5527	24097							
73	2500	19.96	19.13	5725	25158							
60	2500	16.37	23.32	6426	28055							*
48	2700	14.01	29.42	7022	31000							*
45	3000	14.61	31.35	6763	31000							*
35	3000	11.57	39.60	7751	31000							*
32	2700	9.53	43.25	8792	31000							
29	2700	8.60	47.95	9337	31000							
26	3200	9.34	53.43	8754	31000							
24	3200	8.57	58.22	9203	31000							
22	3200	7.73	64.53	9773	31000							
20	3000	6.65	70.40	10842	31000							
18	3000	6.08	77.00	11424	31000							

ITSIS 943						**ITS 943**				
						80B5	**90B5/B14**	**100B5/B14**	**112B5/B14**	**132B5/B14**
15	3200	5.31	94.05	12175	31000					
14	3200	4.99	99.94	12614	31000					*
13	3200	4.56	109.42	13299	31000					*
12	3200	4.12	121.00	14102	31000					*
10	3200	3.71	134.54	15000	31000				*	*
9.5	3200	3.38	147.69	15000	31000				*	*
8.2	3200	2.94	169.71	15000	31000				*	*
7.5	3200	2.69	185.82	15000	31000				*	*
6.7	3200	2.40	207.90	15000	31000				*	*
6.1	3200	2.18	228.46	15000	31000				*	*
5.6	3200	1.99	250.80	15000	31000			*	*	*
4.7	3200	1.69	295.48	15000	31000			*	*	
4.3	3200	1.54	323.40	15000	31000			*	*	
3.9	3200	1.40	356.40	15000	31000			*	*	

N.B.
Le aree evidenziate indicano l'applicabilità della corrispondente grandezza motore.

N.B.
Highlighted areas indicate motor inputs available on each size of unit.

*** =** Il fattore di servizio (**sf**) deve essere scelto in funzione dell'applicazione: si prega di contattare il nostro Servizio Tecnico.

Prima di eseguire la scelta del motoriduttore riferirsi alle prestazioni elencate nelle tabelle dalla pag. D11 alla pag. D17.

**** =*** *The service factor (**sf**) has to be selected depending on application: please contact our Technical Department.*

Before selecting any gearbox, please read the performance values shown in the tables on page D11 to D17.

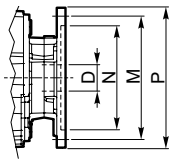

Dimensioni IEC / *IEC Dimensions*									
	80 B5	**90 B5**	**90 B14**	**100/112 B5**	**100/112 B14**	**132 B5**	**132 B14**	**160 B5**	**180 B5**
N	130	130	95	180	110	230	130	250	250
M	165	165	115	215	130	265	165	300	300
P	200	200	140	250	160	300	200	350	350
D	19	24		28		38		42	48

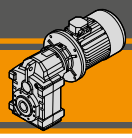

Dati tecnici

Technical data

P_1 [kW]	n_2 [min^{-1}]	M_2 [Nm]	sf	i		IEC	R_2 U [N]	R_2 P [N
0.25								
71A4 (1400 min^{-1})	**5.9**	382	2.9	238.53	**ITS923**	**B5**	9500	18500
	5.1	437	2.5	272.74		**B5**	9500	18500
	4.8	464	2.4	289.29		**B5**	9500	18500
	4.4	508	2.2	316.73		**B5**	9500	18500
	4.1	550	2.0	342.86		**B5**	9500	18500
	3.7	602	1.8	375.38		**B5**	9500	18500
	5.4	413	4.1	257.61	**ITS933**	**B5**	12000	23000
	4.8	472	3.6	294.56		**B5**	12000	23000
	4.5	501	3.4	312.43		**B5**	12000	23000
	4.1	548	3.1	342.07		**B5**	12000	23000
	3.8	594	2.9	370.29		**B5**	12000	23000
	3.5	650	2.6	405.42		**B5**	12000	23000
0.37								
71B4 (1400 min^{-1})	**5.9**	566	1.9	238.53	**ITS923**	**B5**	9500	18500
	5.1	647	1.7	272.74		**B5**	9500	18500
	4.8	686	1.6	289.29		**B5**	9500	18500
	4.4	751	1.5	316.73		**B5**	9500	18500
	4.1	813	1.4	342.86		**B5**	9500	18500
	3.7	891	1.2	375.38		**B5**	9500	18500
	5.4	611	2.8	257.61	**ITS933**	**B5**	12000	23000
	4.8	699	2.4	294.56		**B5**	12000	23000
	4.5	741	2.3	312.43		**B5**	12000	23000
	4.1	812	2.1	342.07		**B5**	12000	23000
	3.8	879	1.9	370.29		**B5**	12000	23000
	3.5	962	1.8	405.42		**B5**	12000	23000
0.55								
80A4 (1400 min^{-1})	**247**	20	25	5.66	**ITS922**	**B5**	3016	10554
	198	25	20	7.06		**B5**	3424	11905
	167	30	17	8.37		**B5**	3775	13059
	153	33	20	9.13		**B5**	3969	13693
	134	38	17	10.43		**B5**	4283	14723
	116	43	15	12.04		**B5**	4647	15910
	104	49	15	13.50		**B5**	4958	16920
	90	56	13	15.50		**B5**	5359	18223
	79	64	14	17.81		**B5**	5795	18500
	64	78	11	21.73		**B5**	6474	18500
	61	83	11	22.92		**B5**	6667	18500
	59	86	11	23.80		**B5**	6807	18500
	53	96	9.4	26.63		**B5**	7240	18500
	48	105	8.5	29.26		**B5**	7623	18500
	44	116	8.6	32.14		**B5**	8021	18500
	40	124	8.1	35.19		**B5**	8430	18500
	36	139	7.2	39.38		**B5**	8951	18500
	32	153	6.6	43.27		**B5**	9408	18500
	29	168	6.0	47.50		**B5**	9500	18500
	25	197	5.6	55.96		**B5**	9500	18500
	23	216	5.1	61.25		**B5**	9500	18500
	21	238	4.6	67.50		**B5**	9500	18500

P_1 [kW]	n_2 [min^{-1}]	M_2 [Nm]	sf	i		IEC	R_2 U [N]	R_2 P [N
0.55								
80A4 (1400 min^{-1})	**19**	265	4.2	75.00	**ITS923**	**B5**	9500	18500
	16	304	3.6	86.28		**B5**	9500	18500
	15	333	3.3	94.46		**B5**	9500	18500
	13	383	2.9	108.48		**B5**	9500	18500
	12	419	2.6	118.77		**B5**	9500	18500
	9.9	497	2.2	140.93		**B5**	9500	18500
	9.1	544	2.0	154.30		**B5**	9500	18500
	8.1	608	1.8	172.40		**B5**	9500	18500
	7.4	666	1.7	188.76		**B5**	9500	18500
	6.6	745	1.5	211.15		**B5**	9500	18500
	5.9	841	1.3	238.53		**B5**	9500	18500
	5.1	962	1.1	272.74		**B5**	9500	18500
	4.8	1020	1.1	289.29		**B5**	9500	18500
	4.4	1117	1.0	316.73		**B5**	9500	18500
	30	165	10.0	46.73	**ITS932**	**B5**	10992	23000
	27	181	9.1	51.30		**B5**	11559	23000
	23	213	7.7	60.44		**B5**	12000	23000
	21	233	7.1	66.15		**B5**	12000	23000
	19	257	5.8	72.90		**B5**	12000	23000
	17	286	6.0	81.00	**ITS933**	**B5**	12000	23000
	15	329	5.2	93.18		**B5**	12000	23000
	14	360	4.7	102.02		**B5**	12000	23000
	12	413	4.1	117.16		**B5**	12000	23000
	11	452	3.8	128.28		**B5**	12000	23000
	9.2	537	3.2	152.21		**B5**	12000	23000
	8.4	588	2.9	166.65		**B5**	12000	23000
	7.5	657	2.6	186.19		**B5**	12000	23000
	6.9	719	2.4	203.86		**B5**	12000	23000
	6.1	804	2.1	228.05		**B5**	12000	23000
	5.4	908	1.9	257.61		**B5**	12000	23000
	4.8	1039	1.6	294.56		**B5**	12000	23000
	4.5	1102	1.5	312.43		**B5**	12000	23000
	4.1	1206	1.4	342.07		**B5**	12000	23000
	3.8	1306	1.3	370.29		**B5**	12000	23000
	3.5	1430	1.2	405.42		**B5**	12000	23000
	15	332	9.6	94.05	**ITS943**	**B5**	15000	31000
	14	352	9.1	99.94		**B5**	15000	31000
	13	386	8.3	109.42		**B5**	15000	31000
	12	427	7.5	121.00		**B5**	15000	31000
	10	474	6.7	134.54		**B5**	15000	31000
	9.5	521	6.1	147.69		**B5**	15000	31000
	8.2	599	5.3	169.71		**B5**	15000	31000
	7.5	655	4.9	185.82		**B5**	15000	31000
	6.7	733	4.4	207.90		**B5**	15000	31000
	6.1	806	4.0	228.46		**B5**	15000	31000
	5.6	884	3.6	250.80		**B5**	15000	31000
	4.7	1042	3.1	295.48		**B5**	15000	31000
	4.3	1141	2.8	323.40		**B5**	15000	31000
	3.9	1257	2.5	356.40		**B5**	15000	31000

Dati tecnici

Technical data

P_1 [kW]	n_2 [min^{-1}]	M_2 [Nm]	sf	i		IEC	R_2 U [N]	R_2 P [N
0.75								
80B4 (1400 min^{-1})	**247**	28	18	5.66	**ITS922**	**B5**	3008	10535
	198	35	14	7.06		**B5**	3413	11879
	167	41	12	8.37		**B5**	3760	13026
	153	45	14	9.13		**B5**	3951	13655
	134	51	13	10.43		**B5**	4262	14675
	116	59	11	12.04		**B5**	4621	15851
	104	66	11	13.50		**B5**	4926	16850
	90	76	9.9	15.50		**B5**	5319	18136
	79	87	10	17.81		**B5**	5745	18500
	64	107	8.4	21.73		**B5**	6406	18500
	61	113	8.0	22.92		**B5**	6593	18500
	59	117	7.7	23.80		**B5**	6728	18500
	53	131	6.9	26.63		**B5**	7146	18500
	48	144	6.3	29.26		**B5**	7514	18500
	44	158	6.3	32.14		**B5**	7895	18500
	40	169	5.9	35.19		**B5**	8287	18500
	36	189	5.3	39.38		**B5**	8780	18500
	32	208	4.8	43.27		**B5**	9210	18500
	29	228	4.4	47.50		**B5**	9500	18500
	25	269	4.1	55.96		**B5**	9500	18500
	23	295	3.7	61.25		**B5**	9500	18500
	21	325	3.4	67.50		**B5**	9500	18500
	19	361	3.0	75.00	**ITS923**	**B5**	9500	18500
	16	415	2.7	86.28		**B5**	9500	18500
	15	454	2.4	94.46		**B5**	9500	18500
	13	522	2.1	108.48		**B5**	9500	18500
	12	571	1.9	118.77		**B5**	9500	18500
	9.9	678	1.6	140.93		**B5**	9500	18500
	9.1	742	1.5	154.30		**B5**	9500	18500
	8.1	829	1.3	172.40		**B5**	9500	18500
	7.4	908	1.2	188.76		**B5**	9500	18500
	6.6	1015	1.1	211.15		**B5**	9500	18500
	57	122	9.9	24.75	**ITS932**	**B5**	7671	23000
	54	127	11	25.81		**B5**	7850	23000
	48	142	9.9	28.88		**B5**	8350	23000
	40	170	9.7	34.71		**B5**	9229	23000
	37	187	8.8	38.01		**B5**	9689	23000
	33	205	8.1	42.53		**B5**	10298	23000
	30	225	7.3	46.73		**B5**	10823	23000
	27	247	6.7	51.30		**B5**	11362	23000
	23	291	5.7	60.44		**B5**	12000	23000
	21	318	5.2	66.15		**B5**	12000	23000
	19	351	4.3	72.90		**B5**	12000	23000
	17	390	4.4	81.00	**ITS933**	**B5**	12000	23000
	15	448	3.8	93.18		**B5**	12000	23000
	14	491	3.5	102.02		**B5**	12000	23000
	12	563	3.0	117.16		**B5**	12000	23000
	11	617	2.8	128.28		**B5**	12000	23000
	9.2	732	2.3	152.21		**B5**	12000	23000
	8.4	801	2.1	166.65		**B5**	12000	23000
	7.5	895	1.9	186.19		**B5**	12000	23000
	6.9	980	1.7	203.86		**B5**	12000	23000
	6.1	1097	1.6	228.05		**B5**	12000	23000
	5.4	1239	1.4	257.61		**B5**	12000	23000
	4.8	1417	1.2	294.56		**B5**	12000	23000
	4.5	1503	1.1	312.43		**B5**	12000	23000
	4.1	1645	1.0	342.07		**B5**	12000	23000
	3.8	1781	1.0	370.29		**B5**	12000	23000

P_1 [kW]	n_2 [min^{-1}]	M_2 [Nm]	sf	i		IEC	R_2 U [N]	R_2 P [N
0.75								
80B4 (1400 min^{-1})	**15**	452	7.1	94.05	**ITS943**	**B5**	15000	31000
	14	481	6.7	99.94		**B5**	15000	31000
	13	526	6.1	109.42		**B5**	15000	31000
	12	582	5.5	121.00		**B5**	15000	31000
	10	647	4.9	134.54		**B5**	15000	31000
	9.5	710	4.5	147.69		**B5**	15000	31000
	8.2	816	3.9	169.71		**B5**	15000	31000
	7.5	894	3.6	185.82		**B5**	15000	31000
	6.7	1000	3.2	207.90		**B5**	15000	31000
	6.1	1099	2.9	228.46		**B5**	15000	31000
	5.6	1206	2.7	250.80		**B5**	15000	31000
	4.7	1421	2.3	295.48		**B5**	15000	31000
	4.3	1555	2.1	323.40		**B5**	15000	31000
	3.9	1714	1.9	356.40		**B5**	15000	31000
1.1								
90S4 (1400 min^{-1})	**247**	41	12	5.66	**ITS922**	**B5/B14**	2993	10503
	198	51	9.8	7.06		**B5/B14**	3393	11834
	167	60	8.3	8.37		**B5/B14**	3734	12967
	153	66	9.9	9.13		**B5/B14**	3921	13587
	134	75	8.6	10.43		**B5/B14**	4225	14592
	116	87	7.5	12.04		**B5/B14**	4574	15748
	104	97	7.7	13.50		**B5/B14**	4869	16726
	90	112	6.7	15.50		**B5/B14**	5249	17983
	79	128	7.0	17.81		**B5/B14**	5658	18500
	64	157	5.7	21.73		**B5/B14**	6287	18500
	61	165	5.5	22.92		**B5/B14**	6463	18500
	59	171	5.3	23.80		**B5/B14**	6591	18500
	53	192	4.7	26.63		**B5/B14**	6982	18500
	48	211	4.3	29.26		**B5/B14**	7323	18500
	44	232	4.3	32.14		**B5/B14**	7673	18500
	40	248	4.0	35.19		**B5/B14**	8037	18500
	36	278	3.6	39.38		**B5/B14**	8481	18500
	32	305	3.3	43.27		**B5/B14**	8862	18500
	29	335	3.0	47.50		**B5/B14**	9245	18500
	25	395	2.8	55.96		**B5/B14**	9500	18500
	23	432	2.5	61.25		**B5/B14**	9500	18500
	21	476	2.3	67.50		**B5/B14**	9500	18500
	19	529	2.1	75.00	**ITS923**	**B5/B14**	9500	18500
	16	609	1.8	86.28		**B5/B14**	9500	18500
	15	666	1.7	94.46		**B5/B14**	9500	18500
	13	765	1.4	108.48		**B5/B14**	9500	18500
	12	838	1.3	118.77		**B5/B14**	9500	18500
	9.9	994	1.1	140.93		**B5/B14**	9500	18500
	9.1	1088	1.0	154.30		**B5/B14**	9500	18500
	8.1	1216	0.9	172.40		**B5/B14**	9500	18500
	107	94	9.6	13.06	**ITS932**	**B5/B14**	5321	20175
	96	105	8.6	14.58		**B5/B14**	5658	21394
	83	121	8.3	16.81		**B5/B14**	6121	23000
	73	139	7.2	19.24		**B5/B14**	6594	23000
	59	170	7.1	23.57		**B5/B14**	7365	23000
	57	178	6.7	24.75		**B5/B14**	7561	23000
	54	186	7.5	25.81		**B5/B14**	7732	23000
	48	208	6.7	28.88		**B5/B14**	8209	23000
	40	250	6.6	34.71		**B5/B14**	9040	23000
	37	274	6.0	38.01		**B5/B14**	9471	23000
	33	300	5.5	42.53		**B5/B14**	10042	23000
	30	330	5.0	46.73		**B5/B14**	10526	23000
	27	362	4.6	51.30		**B5/B14**	11019	23000
	23	426	3.9	60.44		**B5/B14**	11913	23000
	21	467	3.5	66.15		**B5/B14**	12000	23000
	19	514	2.9	72.90		**B5/B14**	12000	23000

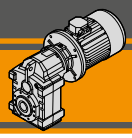

Dati tecnici

Technical data

P_1 [kW]	n_2 [min^{-1}]	M_2 [Nm]	sf	i		IEC	R_2 U [N]	R_2 P [N
1.1								
90S4 (1400 min^{-1})	**17**	571	3.0	81.00	**ITS933**	**B5/B14**	12000	23000
	15	657	2.6	93.18		**B5/B14**	12000	23000
	14	720	2.4	102.02		**B5/B14**	12000	23000
	12	826	2.1	117.16		**B5/B14**	12000	23000
	11	905	1.9	128.28		**B5/B14**	12000	23000
	9.2	1074	1.6	152.21		**B5/B14**	12000	23000
	8.4	1175	1.4	166.65		**B5/B14**	12000	23000
	7.5	1313	1.3	186.19		**B5/B14**	12000	23000
	6.9	1438	1.2	203.86		**B5/B14**	12000	23000
	6.1	1608	1.1	228.05		**B5/B14**	12000	23000
	5.4	1817	0.9	257.61		**B5/B14**	12000	23000
	32	312	8.7	43.25	**ITS942**	**B5/B14**	13823	31000
	29	345	7.8	47.95		**B5/B14**	14603	31000
	26	377	8.5	53.43		**B5/B14**	15000	31000
	24	411	7.8	58.22		**B5/B14**	15000	31000
	22	455	7.0	64.53		**B5/B14**	15000	31000
	20	497	6.0	70.40		**B5/B14**	15000	31000
	18	543	5.5	77.00		**B5/B14**	15000	31000
	15	663	4.8	94.05	**ITS943**	**B5/B14**	15000	31000
	14	705	4.5	99.94		**B5/B14**	15000	31000
	13	772	4.1	109.42		**B5/B14**	15000	31000
	12	853	3.7	121.00		**B5/B14**	15000	31000
	10	949	3.4	134.54		**B5/B14**	15000	31000
	9.5	1042	3.1	147.69		**B5/B14**	15000	31000
	8.2	1197	2.7	169.71		**B5/B14**	15000	31000
	7.5	1311	2.4	185.82		**B5/B14**	15000	31000
	6.7	1466	2.2	207.90		**B5/B14**	15000	31000
	6.1	1611	2.0	228.46		**B5/B14**	15000	31000
	5.6	1769	1.8	250.80		**B5/B14**	15000	31000
	4.7	2084	1.5	295.48		**B5/B14**	15000	31000
	4.3	2281	1.4	323.40		**B5/B14**	15000	31000
	3.9	2514	1.3	356.40		**B5/B14**	15000	31000
1.5								
90L4 (1400 min^{-1})	**247**	56	9.0	5.66	**ITS922**	**B5/B14**	2977	10467
	198	69	7.2	7.06		**B5/B14**	3370	11782
	167	82	6.1	8.37		**B5/B14**	3704	12900
	153	90	7.2	9.13		**B5/B14**	3887	13510
	134	102	6.3	10.43		**B5/B14**	4182	14498
	116	118	5.5	12.04		**B5/B14**	4520	15630
	104	133	5.7	13.50		**B5/B14**	4805	16585
	90	152	4.9	15.50		**B5/B14**	5169	17808
	79	175	5.1	17.81		**B5/B14**	5558	18500
	64	213	4.2	21.73		**B5/B14**	6150	18500
	61	225	4.0	22.92		**B5/B14**	6315	18500
	59	234	3.9	23.80		**B5/B14**	6433	18500
	53	262	3.4	26.63		**B5/B14**	6794	18500
	48	287	3.1	29.26		**B5/B14**	7104	18500
	44	316	3.2	32.14		**B5/B14**	7420	18500
	40	338	3.0	35.19		**B5/B14**	7750	18500
	36	379	2.6	39.38		**B5/B14**	8139	18500
	32	416	2.4	43.27		**B5/B14**	8465	18500
	29	457	2.2	47.50		**B5/B14**	8785	18500
	25	538	2.0	55.96		**B5/B14**	9328	18500
	23	589	1.9	61.25		**B5/B14**	9500	18500
	21	649	1.7	67.50		**B5/B14**	9500	18500
	19	721	1.5	75.00	**ITS923**	**B5/B14**	9500	18500
	16	830	1.3	86.28		**B5/B14**	9500	18500
	15	909	1.2	94.46		**B5/B14**	9500	18500
	13	1043	1.1	108.48		**B5/B14**	9500	18500
	12	1142	1.0	118.77		**B5/B14**	9500	18500

P_1 [kW]	n_2 [min^{-1}]	M_2 [Nm]	sf	i		IEC	R_2 U [N]	R_2 P [N
1.5								
90L4 (1400 min^{-1})	**155**	89	9.6	9.03	**ITS932**	**B5/B14**	4297	16485
	141	97	9.3	9.90		**B5/B14**	4523	17311
	124	111	8.1	11.27		**B5/B14**	4861	18549
	107	128	7.0	13.06		**B5/B14**	5275	20059
	96	143	6.3	14.58		**B5/B14**	5603	21257
	83	165	6.1	16.81		**B5/B14**	6053	22900
	73	189	5.3	19.24		**B5/B14**	6509	23000
	59	232	5.2	23.57		**B5/B14**	7248	23000
	57	243	4.9	24.75		**B5/B14**	7434	23000
	54	254	5.5	25.81		**B5/B14**	7597	23000
	48	284	4.9	28.88		**B5/B14**	8047	23000
	40	341	4.8	34.71		**B5/B14**	8824	23000
	37	373	4.4	38.01		**B5/B14**	9222	23000
	33	409	4.0	42.53		**B5/B14**	9751	23000
	30	449	3.7	46.73		**B5/B14**	10188	23000
	27	493	3.3	51.30		**B5/B14**	10626	23000
	23	581	2.8	60.44		**B5/B14**	11404	23000
	21	636	2.6	66.15		**B5/B14**	11831	23000
	19	701	2.1	72.90		**B5/B14**	12000	23000
	17	779	2.2	81.00	**ITS933**	**B5/B14**	12000	23000
	15	896	1.9	93.18		**B5/B14**	12000	23000
	14	981	1.7	102.02		**B5/B14**	12000	23000
	12	1127	1.5	117.16		**B5/B14**	12000	23000
	11	1234	1.4	128.28		**B5/B14**	12000	23000
	9.2	1464	1.2	152.21		**B5/B14**	12000	23000
	8.4	1603	1.1	166.65		**B5/B14**	12000	23000
	7.5	1791	0.9	186.19		**B5/B14**	12000	23000
	48	289	9.3	29.42	**ITS942**	**B5/B14**	11078	31000
	45	308	9.7	31.35		**B5/B14**	11463	31000
	35	389	7.7	39.60		**B5/B14**	12974	31000
	32	425	6.4	43.25		**B5/B14**	13584	31000
	29	471	5.7	47.95		**B5/B14**	14322	31000
	26	514	6.2	53.43		**B5/B14**	15000	31000
	24	560	5.7	58.22		**B5/B14**	15000	31000
	22	621	5.2	64.53		**B5/B14**	15000	31000
	20	677	4.4	70.40		**B5/B14**	15000	31000
	18	741	4.1	77.00		**B5/B14**	15000	31000
	15	905	3.5	94.05	**ITS943**	**B5/B14**	15000	31000
	14	961	3.3	99.94		**B5/B14**	15000	31000
	13	1052	3.0	109.42		**B5/B14**	15000	31000
	12	1164	2.7	121.00		**B5/B14**	15000	31000
	10	1294	2.5	134.54		**B5/B14**	15000	31000
	9.5	1421	2.3	147.69		**B5/B14**	15000	31000
	8.2	1632	2.0	169.71		**B5/B14**	15000	31000
	7.5	1787	1.8	185.82		**B5/B14**	15000	31000
	6.7	2000	1.6	207.90		**B5/B14**	15000	31000
	6.1	2197	1.5	228.46		**B5/B14**	15000	31000
	5.6	2412	1.3	250.80		**B5/B14**	15000	31000
	4.7	2842	1.1	295.48		**B5/B14**	15000	31000
	4.3	3111	1.0	323.40		**B5/B14**	15000	31000

Dati tecnici

Technical data

P_1 [kW]	n_2 [min^{-1}]	M_2 [Nm]	sf	i		IEC	R_2 U [N]	R_2 P [N
1.85								
90LB4 (1400 min^{-1})	**247**	69	7.3	5.66	**ITS922**	**B5/B14**	2963	10435
	198	85	5.8	7.06		**B5/B14**	3350	11737
	167	101	4.9	8.37		**B5/B14**	3678	12841
	153	111	5.9	9.13		**B5/B14**	3856	13443
	134	126	5.1	10.43		**B5/B14**	4145	14415
	116	146	4.5	12.04		**B5/B14**	4473	15526
	104	164	4.6	13.50		**B5/B14**	4749	16462
	90	188	4.0	15.50		**B5/B14**	5099	17656
	79	216	4.2	17.81		**B5/B14**	5471	18500
	64	263	3.4	21.73		**B5/B14**	6031	18500
	61	278	3.2	22.92		**B5/B14**	6185	18500
	59	288	3.1	23.80		**B5/B14**	6295	18500
	53	323	2.8	26.63		**B5/B14**	6629	18500
	48	354	2.5	29.26		**B5/B14**	6913	18500
	44	389	2.6	32.14		**B5/B14**	7198	18500
	40	417	2.4	35.19		**B5/B14**	7500	18500
	36	467	2.1	39.38		**B5/B14**	7840	18500
	32	513	1.9	43.27		**B5/B14**	8118	18500
	29	563	1.8	47.50		**B5/B14**	8382	18500
	25	664	1.7	55.96		**B5/B14**	8806	18500
	23	727	1.5	61.25		**B5/B14**	9007	18500
	21	801	1.4	67.50		**B5/B14**	9189	18500
	19	890	1.2	75.00	**ITS923**	**B5/B14**	9332	18500
	16	1023	1.1	86.28		**B5/B14**	9411	18500
	15	1121	1.0	94.46		**B5/B14**	9374	18500
	183	93	9.2	7.65	**ITS932**	**B5/B14**	3896	15035
	155	109	7.8	9.03		**B5/B14**	4275	16428
	141	120	7.5	9.90		**B5/B14**	4497	17246
	124	137	6.6	11.27		**B5/B14**	4830	18469
	107	158	5.7	13.06		**B5/B14**	5235	19958
	96	177	5.1	14.58		**B5/B14**	5555	21137
	83	204	4.9	16.81		**B5/B14**	5993	22751
	73	233	4.3	19.24		**B5/B14**	6435	23000
	59	286	4.2	23.57		**B5/B14**	7145	23000
	57	300	4.0	24.75		**B5/B14**	7324	23000
	54	313	4.5	25.81		**B5/B14**	7479	23000
	48	350	4.0	28.88		**B5/B14**	7906	23000
	40	421	3.9	34.71		**B5/B14**	8635	23000
	37	460	3.6	38.01		**B5/B14**	9004	23000
	33	504	3.3	42.53		**B5/B14**	9495	23000
	30	554	3.0	46.73		**B5/B14**	9891	23000
	27	609	2.7	51.30		**B5/B14**	10283	23000
	23	717	2.3	60.44		**B5/B14**	10959	23000
	21	785	2.1	66.15		**B5/B14**	11317	23000
	19	865	1.7	72.90		**B5/B14**	11684	23000
	17	961	1.8	81.00	**ITS933**	**B5/B14**	12000	23000
	15	1105	1.5	93.18		**B5/B14**	12000	23000
	14	1210	1.4	102.02		**B5/B14**	12000	23000
	12	1390	1.2	117.16		**B5/B14**	12000	23000
	11	1522	1.1	128.28		**B5/B14**	12000	23000
	9.2	1806	0.9	152.21		**B5/B14**	12000	23000
	60	283	8.8	23.32	**ITS942**	**B5/B14**	9683	31000
	48	356	7.6	29.42		**B5/B14**	10965	31000
	45	380	7.9	31.35		**B5/B14**	11337	31000
	35	480	6.3	39.60		**B5/B14**	12793	31000
	32	524	5.2	43.25		**B5/B14**	13375	31000
	29	581	4.6	47.95		**B5/B14**	14077	31000
	26	634	5.0	53.43		**B5/B14**	14868	31000
	24	691	4.6	58.22		**B5/B14**	15000	31000
	22	766	4.2	64.53		**B5/B14**	15000	31000
	20	835	3.6	70.40		**B5/B14**	15000	31000
	18	913	3.3	77.00		**B5/B14**	15000	31000

P_1 [kW]	n_2 [min^{-1}]	M_2 [Nm]	sf	i		IEC	R_2 U [N]	R_2 P [N
1.85								
90LB4 (1400 min^{-1})	**15**	1116	2.9	94.05	**ITS943**	**B5/B14**	15000	31000
	14	1186	2.7	99.94		**B5/B14**	15000	31000
	13	1298	2.5	109.42		**B5/B14**	15000	31000
	12	1435	2.2	121.00		**B5/B14**	15000	31000
	10	1596	2.0	134.54		**B5/B14**	15000	31000
	9.5	1752	1.8	147.69		**B5/B14**	15000	31000
	8.2	2013	1.6	169.71		**B5/B14**	15000	31000
	7.5	2204	1.5	185.82		**B5/B14**	15000	31000
	6.7	2466	1.3	207.90		**B5/B14**	15000	31000
	6.1	2710	1.2	228.46		**B5/B14**	15000	31000
	5.6	2975	1.1	250.80		**B5/B14**	15000	31000
2.2								
100LA4 (1400 min^{-1})	**247**	81	6.1	5.66	**ITS922**	**B5/B14**	2949	10402
	198	102	4.9	7.06		**B5/B14**	3330	11692
	167	121	4.1	8.37		**B5/B14**	3651	12782
	153	132	4.9	9.13		**B5/B14**	3826	13376
	134	150	4.3	10.43		**B5/B14**	4107	14332
	116	174	3.7	12.04		**B5/B14**	4427	15423
	104	194	3.9	13.50		**B5/B14**	4693	16338
	90	223	3.4	15.50		**B5/B14**	5030	17503
	79	257	3.5	17.81		**B5/B14**	5384	18500
	64	313	2.9	21.73		**B5/B14**	5912	18500
	61	330	2.7	22.92		**B5/B14**	6055	18500
	59	343	2.6	23.80		**B5/B14**	6158	18500
	53	384	2.3	26.63			6465	18500
	48	422	2.1	29.26		**B5/B14**	6722	18500
	44	463	2.2	32.14		**B5/B14**	6976	18500
	40	496	2.0	35.19		**B5/B14**	7249	18500
	36	555	1.8	39.38		**B5/B14**	7540	18500
	32	610	1.6	43.27		**B5/B14**	7770	18500
	29	670	1.5	47.50		**B5/B14**	7979	18500
	25	789	1.4	55.96		**B5/B14**	8284	18500
	23	864	1.3	61.25		**B5/B14**	8405	18500
	21	952	1.2	67.50		**B5/B14**	8486	18500
	19	1058	1.0	75.00	**ITS923**	**B5/B14**	8502	18500
	228	88	9.6	6.13	**ITS932**	**B5/B14**	3429	13323
	183	110	7.7	7.65		**B5/B14**	3879	14991
	155	130	6.5	9.03		**B5/B14**	4252	16371
	141	143	6.3	9.90		**B5/B14**	4471	17180
	124	162	5.5	11.27		**B5/B14**	4798	18388
	107	188	4.8	13.06		**B5/B14**	5194	19857
	96	210	4.3	14.58		**B5/B14**	5507	21017
	83	242	4.1	16.81		**B5/B14**	5933	22601
	73	277	3.6	19.24		**B5/B14**	6361	23000
	59	340	3.5	23.57		**B5/B14**	7043	23000
	57	357	3.4	24.75		**B5/B14**	7213	23000
	54	372	3.8	25.81		**B5/B14**	7361	23000
	48	416	3.4	28.88		**B5/B14**	7765	23000
	40	500	3.3	34.71		**B5/B14**	8446	23000
	37	548	3.0	38.01		**B5/B14**	8785	23000
	33	600	2.8	42.53		**B5/B14**	9240	23000
	30	659	2.5	46.73		**B5/B14**	9595	23000
	27	724	2.3	51.30		**B5/B14**	9939	23000
	23	853	1.9	60.44		**B5/B14**	10514	23000
	21	933	1.8	66.15		**B5/B14**	10804	23000
	19	1028	1.5	72.90		**B5/B14**	11085	23000
	17	1143	1.5	81.00	**ITS933**	**B5/B14**	11343	23000
	15	1314	1.3	93.18		**B5/B14**	11582	23000
	14	1439	1.2	102.02		**B5/B14**	11655	23000
	12	1653	1.0	117.16		**B5/B14**	11604	23000
	11	1810	0.9	128.28		**B5/B14**	11435	23000

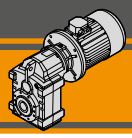

Dati tecnici

Technical data

P_1 [kW]	n_2 [min^{-1}]	M_2 [Nm]	sf	i		IEC	R_2 U [N]	R_2 P [N
2.2								
100LA4 (1400 min^{-1})	**98**	205	9.8	14.21	**ITS942**	**B5/B14**	7340	26991
	88	229	10	15.91		**B5/B14**	7809	28652
	81	250	9.6	17.33		**B5/B14**	8183	29976
	73	276	9.1	19.13		**B5/B14**	8636	31000
	60	336	7.4	23.32		**B5/B14**	9604	31000
	48	424	6.4	29.42		**B5/B14**	10851	31000
	45	452	6.6	31.35		**B5/B14**	11212	31000
	35	571	5.3	39.60		**B5/B14**	12611	31000
	32	623	4.3	43.25		**B5/B14**	13167	31000
	29	691	3.9	47.95		**B5/B14**	13831	31000
	26	754	4.2	53.43		**B5/B14**	14582	31000
	24	821	3.9	58.22		**B5/B14**	15000	31000
	22	910	3.5	64.53		**B5/B14**	15000	31000
	20	993	3.0	70.40		**B5/B14**	15000	31000
	18	1086	2.8	77.00		**B5/B14**	15000	31000
	15	1327	2.4	94.05	**ITS943**	**B5/B14**	15000	31000
	14	1410	2.3	99.94		**B5/B14**	15000	31000
	13	1544	2.1	109.42		**B5/B14**	15000	31000
	12	1707	1.9	121.00		**B5/B14**	15000	31000
	10	1898	1.7	134.54		**B5/B14**	15000	31000
	9.5	2083	1.5	147.69		**B5/B14**	15000	31000
	8.2	2394	1.3	169.71		**B5/B14**	15000	31000
	7.5	2621	1.2	185.82		**B5/B14**	15000	31000
	6.7	2933	1.1	207.90		**B5/B14**	15000	31000
	6.1	3223	1.0	228.46		**B5/B14**	15000	31000
3.0								
100LB4 (1400 min^{-1})	**247**	111	4.5	5.66	**ITS922**	**B5/B14**	2916	10329
	198	139	3.6	7.06		**B5/B14**	3284	11589
	167	164	3.0	8.37		**B5/B14**	3591	12648
	153	179	3.6	9.13		**B5/B14**	3757	13222
	134	205	3.2	10.43		**B5/B14**	4022	14143
	116	237	2.7	12.04		**B5/B14**	4319	15186
	104	265	2.8	13.50		**B5/B14**	4565	16056
	90	304	2.5	15.50		**B5/B14**	4870	17153
	79	350	2.6	17.81		**B5/B14**	5185	18309
	64	427	2.1	21.73		**B5/B14**	5639	18500
	61	450	2.0	22.92		**B5/B14**	5759	18500
	59	468	1.9	23.80		**B5/B14**	5843	18500
	53	523	1.7	26.63		**B5/B14**	6089	18500
	48	575	1.6	29.26		**B5/B14**	6286	18500
	44	631	1.6	32.14		**B5/B14**	6470	18500
	40	677	1.5	35.19		**B5/B14**	6677	18500
	36	757	1.3	39.38		**B5/B14**	6856	18500
	32	832	1.2	43.27		**B5/B14**	6976	18500
	29	914	1.1	47.50		**B5/B14**	7059	18500
	25	1077	1.0	55.96		**B5/B14**	7090	18500

P_1 [kW]	n_2 [min^{-1}]	M_2 [Nm]	sf	i		IEC	R_2 U [N]	R_2 P [N
3.0								
100LB4 (1400 min^{-1})	**228**	121	7.1	6.13	**ITS932**	**B5/B14**	3401	13251
	183	150	5.7	7.65		**B5/B14**	3840	14890
	155	177	4.8	9.03		**B5/B14**	4201	16240
	141	194	4.6	9.90		**B5/B14**	4412	17029
	124	221	4.1	11.27		**B5/B14**	4725	18204
	107	257	3.5	13.06		**B5/B14**	5103	19626
	96	286	3.1	14.58		**B5/B14**	5398	20743
	83	330	3.0	16.81		**B5/B14**	5796	22260
	73	378	2.6	19.24		**B5/B14**	6191	23000
	59	463	2.6	23.57		**B5/B14**	6809	23000
	57	486	2.5	24.75		**B5/B14**	6960	23000
	54	507	2.8	25.81		**B5/B14**	7091	23000
	48	567	2.5	28.88		**B5/B14**	7442	23000
	40	682	2.4	34.71		**B5/B14**	8014	23000
	37	747	2.2	38.01		**B5/B14**	8287	23000
	33	818	2.0	42.53		**B5/B14**	8657	23000
	30	899	1.8	46.73		**B5/B14**	8918	23000
	27	987	1.7	51.30		**B5/B14**	9154	23000
	23	1163	1.4	60.44		**B5/B14**	9496	23000
	21	1272	1.3	66.15		**B5/B14**	9629	23000
	19	1402	1.1	72.90		**B5/B14**	9715	23000
	17	1558	1.1	81.00	**ITS933**	**B5/B14**	9724	23000
	15	1792	0.9	93.18		**B5/B14**	9562	23000
	98	279	7.2	14.21	**ITS942**	**B5/B14**	7258	26808
	88	313	7.7	15.91		**B5/B14**	7711	28435
	81	340	7.1	17.33		**B5/B14**	8071	29728
	73	376	6.7	19.13		**B5/B14**	8504	31000
	60	458	5.5	23.32		**B5/B14**	9425	31000
	48	578	4.7	29.42		**B5/B14**	10592	31000
	45	616	4.9	31.35		**B5/B14**	10925	31000
	35	778	3.9	39.60		**B5/B14**	12196	31000
	32	850	3.2	43.25		**B5/B14**	12689	31000
	29	942	2.9	47.95		**B5/B14**	13269	31000
	26	1028	3.1	53.43		**B5/B14**	13929	31000
	24	1120	2.9	58.22		**B5/B14**	14413	31000
	22	1241	2.6	64.53		**B5/B14**	14983	31000
	20	1354	2.2	70.40		**B5/B14**	15000	31000
	18	1481	2.0	77.00		**B5/B14**	15000	31000
	15	1809	1.8	94.05	**ITS943**	**B5/B14**	15000	31000
	14	1923	1.7	99.94		**B5/B14**	15000	31000
	13	2105	1.5	109.42		**B5/B14**	15000	31000
	12	2328	1.4	121.00		**B5/B14**	15000	31000
	10	2588	1.2	134.54		**B5/B14**	15000	31000
	9.5	2841	1.1	147.69		**B5/B14**	15000	31000
	8.2	3265	1.0	169.71		**B5/B14**	15000	31000

Dati tecnici

Technical data

P_1 [kW]	n_2 [min^{-1}]	M_2 [Nm]	sf	i		IEC	R_2 U [N]	R_2 P [N
4.0								
112M4 (1400 min^{-1})	**247**	148	3.4	5.66	**ITS922**	**B5/B14**	2876	10238
	198	185	2.7	7.06		**B5/B14**	3226	11460
	167	219	2.3	8.37		**B5/B14**	3516	12480
	153	239	2.7	9.13		**B5/B14**	3671	13030
	134	273	2.4	10.43		**B5/B14**	3915	13906
	116	316	2.1	12.04		**B5/B14**	4186	14891
	104	354	2.1	13.50		**B5/B14**	4404	15704
	90	406	1.8	15.50		**B5/B14**	4671	16717
	79	467	1.9	17.81		**B5/B14**	4937	17767
	64	569	1.6	21.73		**B5/B14**	5298	18500
	61	600	1.5	22.92		**B5/B14**	5388	18500
	59	623	1.4	23.80		**B5/B14**	5450	18500
	53	697	1.3	26.63		**B5/B14**	5619	18500
	48	766	1.2	29.26		**B5/B14**	5740	18500
	44	842	1.2	32.14		**B5/B14**	5836	18500
	40	903	1.1	35.19		**B5/B14**	5961	18500
	36	1010	1.0	39.38		**B5/B14**	6001	18500
	32	1110	0.9	43.27		**B5/B14**	5983	18500
	228	161	5.3	6.13	**ITS932**	**B5/B14**	3366	13162
	183	200	4.2	7.65		**B5/B14**	3790	14764
	155	237	3.6	9.03		**B5/B14**	4137	16077
	141	259	3.5	9.90		**B5/B14**	4338	16841
	124	295	3.0	11.27		**B5/B14**	4634	17974
	107	342	2.6	13.06		**B5/B14**	4988	19337
	96	382	2.4	14.58		**B5/B14**	5261	20400
	83	440	2.3	16.81		**B5/B14**	5625	21833
	73	504	2.0	19.24		**B5/B14**	5979	23000
	59	617	1.9	23.57		**B5/B14**	6516	23000
	57	648	1.9	24.75		**B5/B14**	6644	23000
	54	676	2.1	25.81		**B5/B14**	6753	23000
	48	756	1.9	28.88		**B5/B14**	7039	23000
	40	909	1.8	34.71		**B5/B14**	7474	23000
	37	996	1.7	38.01		**B5/B14**	7663	23000
	33	1091	1.5	42.53		**B5/B14**	7928	23000
	30	1199	1.4	46.73		**B5/B14**	8071	23000
	27	1316	1.3	51.30		**B5/B14**	8173	23000
	23	1550	1.1	60.44		**B5/B14**	8224	23000
	21	1697	1.0	66.15		**B5/B14**	8162	23000
	98	372	5.4	14.21	**ITS942**	**B5/B14**	7155	26580
	88	417	5.8	15.91		**B5/B14**	7589	28163
	81	454	5.3	17.33		**B5/B14**	7931	29417
	73	501	5.0	19.13		**B5/B14**	8340	30929
	60	611	4.1	23.32		**B5/B14**	9201	31000
	48	771	3.5	29.42		**B5/B14**	10268	31000
	45	821	3.7	31.35		**B5/B14**	10567	31000
	35	1037	2.9	39.60		**B5/B14**	11677	31000
	32	1133	2.4	43.25		**B5/B14**	12093	31000
	29	1256	2.1	47.95		**B5/B14**	12567	31000
	26	1370	2.3	53.43		**B5/B14**	13113	31000
	24	1493	2.1	58.22		**B5/B14**	13478	31000
	22	1655	1.9	64.53		**B5/B14**	13882	31000
	20	1806	1.7	70.40		**B5/B14**	14184	31000
	18	1975	1.5	77.00		**B5/B14**	14446	31000
	15	2412	1.3	94.05	**ITS943**	**B5/B14**	14785	31000
	14	2563	1.2	99.94		**B5/B14**	14800	31000
	13	2807	1.1	109.42		**B5/B14**	14723	31000
	12	3103	1.0	121.00		**B5/B14**	14473	31000

P_1 [kW]	n_2 [min^{-1}]	M_2 [Nm]	sf	i		IEC	R_2 U [N]	R_2 P [N
5.5								
132S4 (1400 min^{-1})	**247**	204	2.5	5.66	**ITS922**	**B5/B14**	2815	10100
	198	254	2.0	7.06		**B5/B14**	3140	11266
	167	301	1.7	8.37		**B5/B14**	3403	12228
	153	329	2.0	9.13		**B5/B14**	3541	12741
	134	376	1.7	10.43		**B5/B14**	3755	13552
	116	434	1.5	12.04		**B5/B14**	3985	14448
	104	486	1.5	13.50		**B5/B14**	4164	15174
	90	558	1.3	15.50		**B5/B14**	4371	16061
	79	642	1.4	17.81		**B5/B14**	4564	16953
	64	783	1.1	21.73		**B5/B14**	4787	18183
	61	825	1.1	22.92		**B5/B14**	4832	18494
	59	857	1.1	23.80		**B5/B14**	4859	18500
	228	221	3.8	6.13	**ITS932**	**B5/B14**	3314	13027
	183	276	3.1	7.65		**B5/B14**	3717	14575
	155	325	2.6	9.03		**B5/B14**	4041	15833
	141	357	2.5	9.90		**B5/B14**	4226	16559
	124	406	2.2	11.27		**B5/B14**	4498	17630
	107	470	1.9	13.06		**B5/B14**	4815	18904
	96	525	1.7	14.58		**B5/B14**	5056	19886
	83	605	1.7	16.81		**B5/B14**	5368	21192
	73	693	1.4	19.24		**B5/B14**	5661	22462
	59	849	1.4	23.57		**B5/B14**	6077	23000
	57	891	1.3	24.75		**B5/B14**	6170	23000
	54	930	1.5	25.81		**B5/B14**	6246	23000
	48	1040	1.3	28.88		**B5/B14**	6433	23000
	40	1250	1.3	34.71		**B5/B14**	6663	23000
	37	1369	1.2	38.01		**B5/B14**	6728	23000
	33	1500	1.1	42.53		**B5/B14**	6834	23000
	30	1648	1.0	46.73		**B5/B14**	6801	23000
	27	1809	0.9	51.30		**B5/B14**	6701	23000
	177	285	5.3	7.93	**ITS942**	**B5/B14**	5157	19427
	146	345	4.3	9.59		**B5/B14**	5711	21458
	131	384	4.4	10.67		**B5/B14**	6041	22671
	118	426	4.0	11.82		**B5/B14**	6372	23896
	108	465	4.3	12.91		**B5/B14**	6667	24990
	98	512	3.9	14.21		**B5/B14**	7002	26238
	88	573	4.2	15.91		**B5/B14**	7405	27755
	81	624	3.8	17.33		**B5/B14**	7720	28952
	73	689	3.6	19.13		**B5/B14**	8095	30386
	60	840	3.0	23.32		**B5/B14**	8864	31000
	48	1060	2.5	29.42		**B5/B14**	9782	31000
	45	1129	2.7	31.35		**B5/B14**	10029	31000
	35	1426	2.1	39.60		**B5/B14**	10899	31000
	32	1558	1.7	43.25		**B5/B14**	11198	31000
	29	1727	1.6	47.95		**B5/B14**	11513	31000
	26	1884	1.7	53.43		**B5/B14**	11889	31000
	24	2053	1.6	58.22		**B5/B14**	12076	31000
	22	2276	1.4	64.53		**B5/B14**	12231	31000
	20	2483	1.2	70.40		**B5/B14**	12289	31000
	18	2716	1.1	77.00		**B5/B14**	12262	31000
	15	3317	1.0	94.05	**ITS943**	**B5/B14**	11787	31000
7.5								
132MA4 (1400 min^{-1})	**247**	278	1.8	5.66	**ITS922**	**B5/B14**	2734	9917
	198	347	1.4	7.06		**B5/B14**	3025	11008
	167	411	1.2	8.37		**B5/B14**	3253	11892
	153	448	1.4	9.13		**B5/B14**	3369	12357
	134	512	1.3	10.43		**B5/B14**	3542	13078
	116	592	1.1	12.04		**B5/B14**	3717	13857
	104	663	1.1	13.50		**B5/B14**	3843	14469
	90	761	1.0	15.50		**B5/B14**	3972	15188
	79	875	1.0	17.81		**B5/B14**	4066	15869

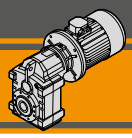

Dati tecnici

Technical data

P_1 [kW]	n_2 [min^{-1}]	M_2 [Nm]	sf	i		IEC	R_2 U [N]	R_2 P [N
7.5								
132MA4 (1400 min^{-1})	**228**	301	2.8	6.13	**ITS932**	**B5/B14**	3245	12848
	183	376	2.3	7.65		**B5/B14**	3618	14323
	155	444	1.9	9.03		**B5/B14**	3912	15506
	141	486	1.9	9.90		**B5/B14**	4078	16183
	124	553	1.6	11.27		**B5/B14**	4316	17170
	107	642	1.4	13.06		**B5/B14**	4585	18326
	96	716	1.3	14.58		**B5/B14**	4782	19201
	83	825	1.2	16.81		**B5/B14**	5025	20338
	73	945	1.1	19.24		**B5/B14**	5237	21409
	59	1158	1.0	23.57		**B5/B14**	5492	22947
	57	1216	1.0	24.75		**B5/B14**	5538	23000
	54	1268	1.1	25.81		**B5/B14**	5571	23000
	48	1418	1.0	28.88		**B5/B14**	5627	23000
	40	1705	1.0	34.71		**B5/B14**	5583	23000
	177	389	3.9	7.93	**ITS942**	**B5/B14**	5076	19243
	146	471	3.2	9.59		**B5/B14**	5601	21210
	131	524	3.2	10.67		**B5/B14**	5911	22378
	118	581	2.9	11.82		**B5/B14**	6220	23553
	108	634	3.2	12.91		**B5/B14**	6492	24597
	98	698	2.9	14.21		**B5/B14**	6797	25781
	88	781	3.1	15.91		**B5/B14**	7160	27212
	81	851	2.8	17.33		**B5/B14**	7440	28332
	73	940	2.7	19.13		**B5/B14**	7767	29663
	60	1145	2.2	23.32		**B5/B14**	8415	31000
	48	1445	1.9	29.42		**B5/B14**	9133	31000
	45	1540	1.9	31.35		**B5/B14**	9312	31000
	35	1945	1.5	39.60		**B5/B14**	9861	31000
	32	2124	1.3	43.25		**B5/B14**	10004	31000
	29	2355	1.1	47.95		**B5/B14**	10108	31000
	26	2569	1.2	53.43		**B5/B14**	10256	31000
	24	2800	1.1	58.22		**B5/B14**	10206	31000
	22	3103	1.0	64.53		**B5/B14**	10030	31000
9.2								
132L4 (1400 min^{-1})	**247**	341	1.5	5.66	**ITS922**	**B5/B14**	2666	9762
	198	425	1.2	7.06		**B5/B14**	2928	10789
	167	504	1.0	8.37		**B5/B14**	3125	11607
	153	550	1.2	9.13		**B5/B14**	3222	12030
	134	629	1.0	10.43		**B5/B14**	3361	12676
	228	370	2.3	6.13	**ITS932**	**B5/B14**	3186	12696
	183	461	1.8	7.65		**B5/B14**	3534	14108
	155	544	1.6	9.03		**B5/B14**	3804	15229
	141	596	1.5	9.90		**B5/B14**	3952	15864
	124	679	1.3	11.27		**B5/B14**	4161	16779
	107	787	1.1	13.06		**B5/B14**	4390	17835
	96	878	1.0	14.58		**B5/B14**	4550	18619
	83	1012	1.0	16.81		**B5/B14**	4734	19612
	177	477	3.1	7.93	**ITS942**	**B5/B14**	5007	19086
	146	578	2.6	9.59		**B5/B14**	5508	20999
	131	643	2.6	10.67		**B5/B14**	5800	22130
	118	712	2.4	11.82		**B5/B14**	6089	23262
	108	778	2.6	12.91		**B5/B14**	6342	24263
	98	856	2.3	14.21		**B5/B14**	6623	25394
	88	958	2.5	15.91		**B5/B14**	6952	26750
	81	1044	2.3	17.33		**B5/B14**	7202	27805
	73	1153	2.2	19.13		**B5/B14**	7488	29048
	60	1405	1.8	23.32		**B5/B14**	8034	31000
	48	1773	1.5	29.42		**B5/B14**	8582	31000
	45	1889	1.6	31.35		**B5/B14**	8703	31000
	35	2386	1.3	39.60		**B5/B14**	8979	31000
	32	2606	1.0	43.25		**B5/B14**	8990	31000
	29	2889	0.9	47.95		**B5/B14**	8914	31000
	26	3152	1.0	53.43		**B5/B14**	8869	31000

P_1 [kW]	n_2 [min^{-1}]	M_2 [Nm]	sf	i		IEC	R_2 U [N]	R_2 P [N
11.0								
160M4 (1400 min^{-1})	**228**	442	1.9	6.13	**ITS932**	**B5**	3123	12535
	183	551	1.5	7.65		**B5**	3446	13881
	155	651	1.3	9.03		**B5**	3688	14935
	141	713	1.3	9.90		**B5**	3819	15526
	124	812	1.1	11.27		**B5**	3997	16366
	107	941	1.0	13.06		**B5**	4183	17315
	177	571	2.6	7.93	**ITS942**	**B5**	4934	18920
	146	691	2.2	9.59		**B5**	5409	20776
	131	768	2.2	10.67		**B5**	5683	21867
	118	851	2.0	11.82		**B5**	5952	22953
	108	930	2.2	12.91		**B5**	6184	23910
	98	1024	2.0	14.21		**B5**	6438	24983
	88	1146	2.1	15.91		**B5**	6732	26261
	81	1248	1.9	17.33		**B5**	6950	27246
	73	1378	1.8	19.13		**B5**	7193	28397
	60	1680	1.5	23.32		**B5**	7630	30695
	48	2119	1.3	29.42		**B5**	7999	31000
	45	2258	1.3	31.35		**B5**	8058	31000
	35	2853	1.1	39.60		**B5**	8046	31000
15.0								
160L4 (1400 min^{-1})	**228**	603	1.4	6.13	**ITS932**	**B5**	2984	12177
	183	752	1.1	7.65		**B5**	3248	13377
	155	887	1.0	9.03		**B5**	3432	14283
	177	779	1.9	7.93	**ITS942**	**B5**	4771	18551
	146	942	1.6	9.59		**B5**	5189	20280
	131	1048	1.6	10.67		**B5**	5423	21282
	118	1161	1.5	11.82		**B5**	5646	22267
	108	1268	1.6	12.91		**B5**	5832	23124
	98	1396	1.4	14.21		**B5**	6028	24070
	88	1563	1.5	15.91		**B5**	6242	25174
	81	1702	1.4	17.33		**B5**	6389	26006
	73	1879	1.3	19.13		**B5**	6537	26950
	60	2291	1.1	23.32		**B5**	6733	28729
18.5								
180M4 (1400 min^{-1})	**177**	960	1.6	7.93	**ITS942**	**B5**	4629	18228
	146	1162	1.3	9.59		**B5**	4997	19846
	131	1292	1.3	10.67		**B5**	5196	20770
	118	1432	1.2	11.82		**B5**	5378	21667
	108	1564	1.3	12.91		**B5**	5524	22436
	98	1722	1.2	14.21		**B5**	5670	23271
	88	1927	1.2	15.91		**B5**	5814	24224
	81	2099	1.1	17.33		**B5**	5898	24920
	73	2318	1.1	19.13		**B5**	5963	25685
22.0								
180L4 (1400 min^{-1})	**177**	1142	1.3	7.93	**ITS942**	**B5**	4487	17905
	146	1382	1.1	9.59		**B5**	4805	19412
	131	1537	1.1	10.67		**B5**	4968	20258
	118	1703	1.0	11.82		**B5**	5110	21067
	108	1859	1.1	12.91		**B5**	5217	21749
	98	2048	1.0	14.21		**B5**	5311	22473
	88	2292	1.0	15.91		**B5**	5385	23273

Dimensioni ***Dimensions***

ITS 922 - ITS 923

ITS 922 U
ITS 923 U

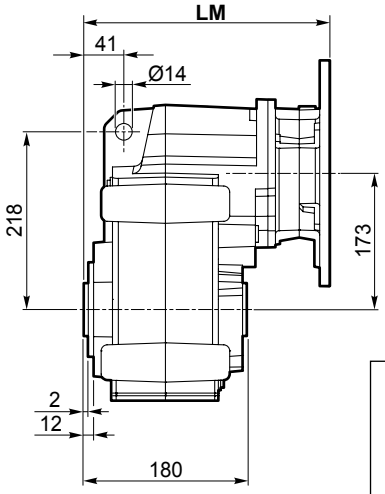

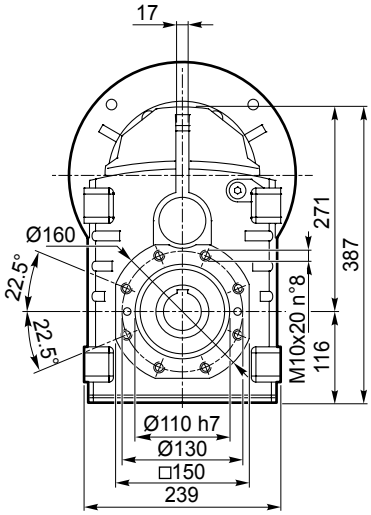

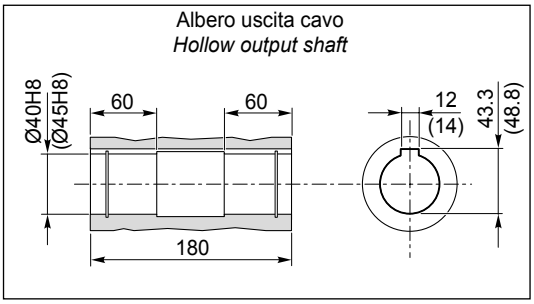

ITS 922 P
ITS 923 P

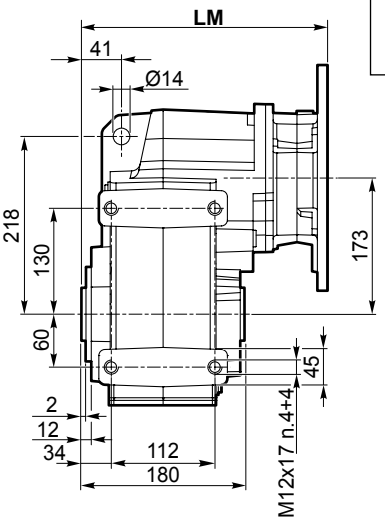

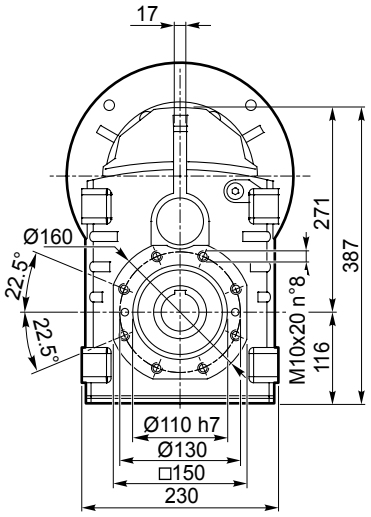

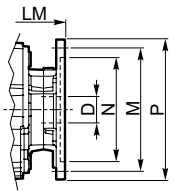

Dimensioni IEC / *IEC Dimensions*								
	71 B5	**80 B5**	**90 B5**	**90 B14**	**100/112 B5**	**100/112 B14**	**132 B5**	**132 B14**
LM	282.5	282.5	282.5	287	286.5	287	307.5	
N	110	130	130	95	180	110	230	130
M	130	165	165	115	215	130	265	165
P	160	200	200	140	250	160	300	200
D	14	19	24		28		38	

IEC Motori applicabili
IEC Motor adapters

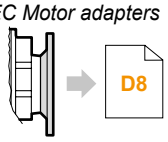

ITSIS..

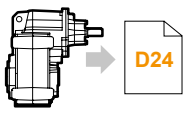

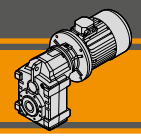

ITS 922 - ITS 923

ITS 922 U/F...
ITS 923 U/F...

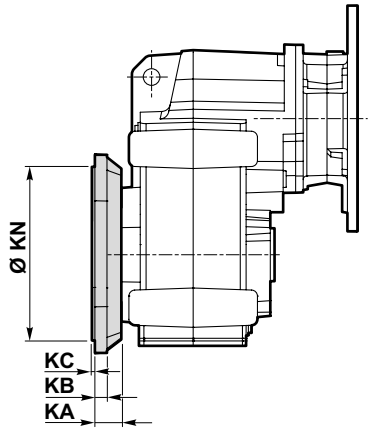

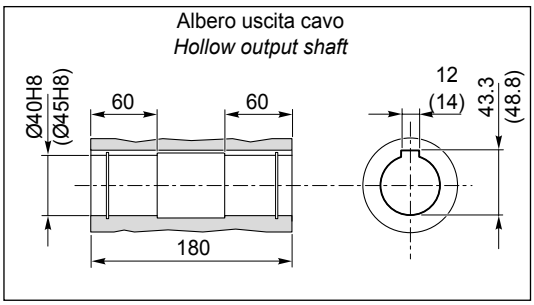

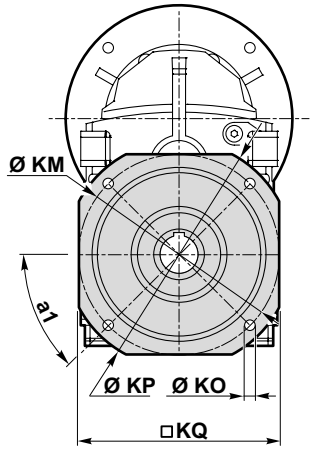

ITS 922 P/F...
ITS 923 P/F...

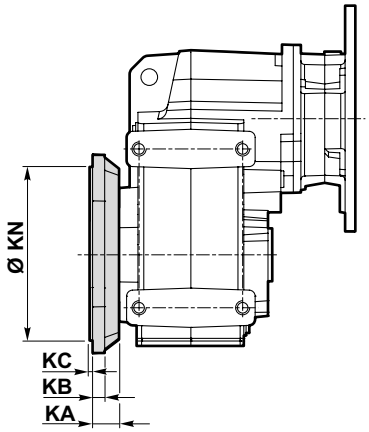

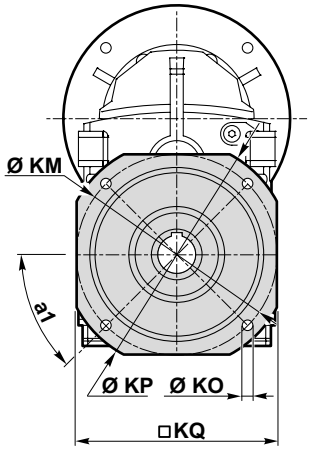

Versione **F** / ***F*** *Version*											
ITS	**KA**	**a_1**	**KB**	**KC**	**Ø KM**	**KN** f7	**KO**	**KP□**	**KQ**	**Flangia / *Flange*** Tipo / *Type*	**Peso / *Weight* [kg]**
922 923	35	45°	13	4	165	130	11	200	172	**F200**	**2.6**
	35	45°	13	4	215	180	14	250	215	**F250**	**3.8**
	35	45°	13	4	265	230	14	300	265	**F300**	**5.6**

Peso / *Weight [kg]*								
ITS	**71 B5**	**80 B5**	**90 B5**	**90 B14**	**100/112 B5**	**100/112 B14**	**132 B5**	**132 B14**
922 U	-	42	42	41	44	42	47	44
922 P	-	42	42	41	44	41	47	44
923 U	44	45	45	44	47	44		-
923 P	44	44	44	43	46	44		-

Nota: peso del riduttore complessivo di olio per la posizione M1 (B3)
Note: weight of the gearbox filled with oil for M1 (B3) assembly position

Dimensioni ***Dimensions***

ITS 932 - ITS 933

ITS 932 U
ITS 933 U

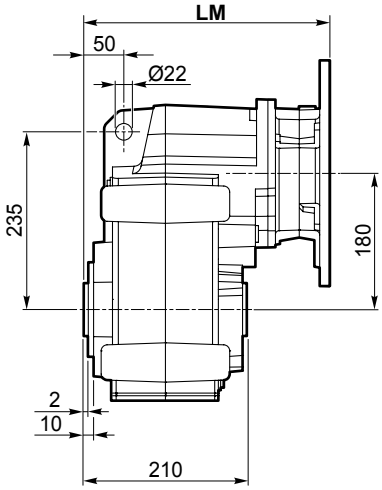

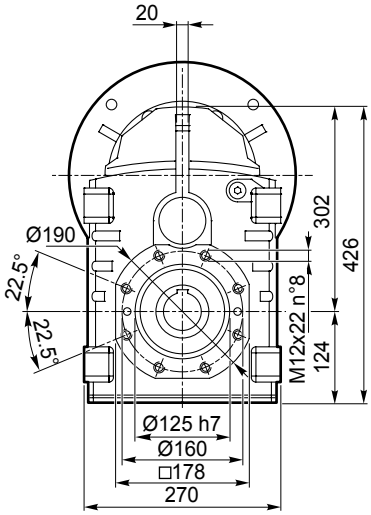

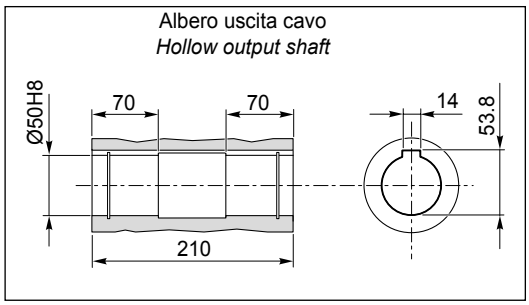

ITS 932 P
ITS 933 P

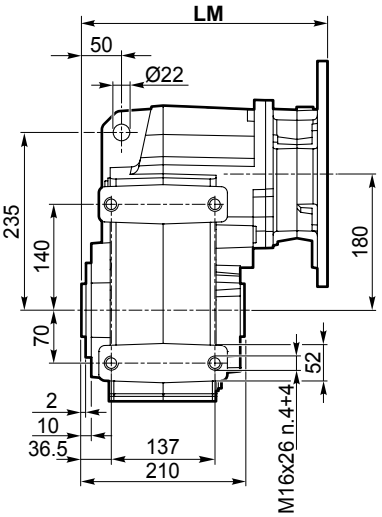

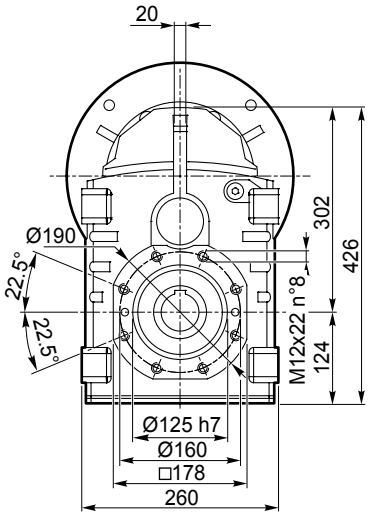

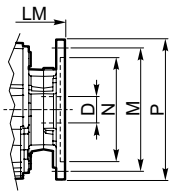

Dimensioni IEC / *IEC Dimensions*									
	71 B5	**80 B5**	**90 B5**	**90 B14**	**100/112 B5**	**100/112 B14**	**132 B5**	**132 B14**	**160 B5**
LM	297.5	297.5	297.5	302	301.5	302	322.5		372.5
N	110	130	130	95	180	110	230	130	250
M	130	165	165	115	215	130	265	165	300
P	160	200	200	140	250	160	300	200	350
D	14	19	24		28		38		42

IEC Motori applicabili
IEC Motor adapters

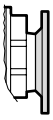

D9

ITSIS..

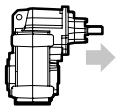

D24

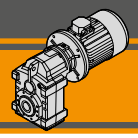

ITS 932 - ITS 933

ITS 932 U/F...
ITS 933 U/F...

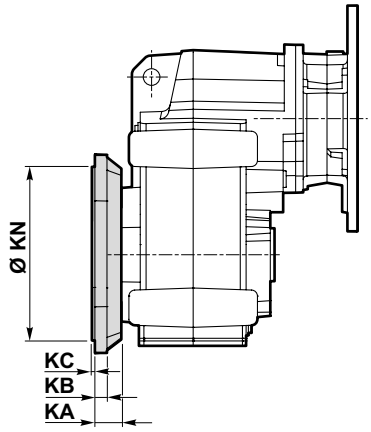

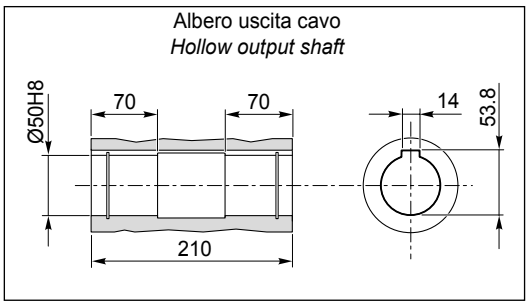

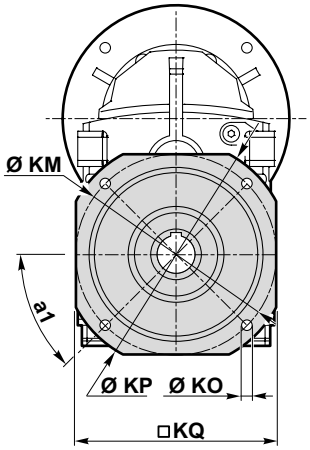

ITS 932 P/F...
ITS 933 P/F...

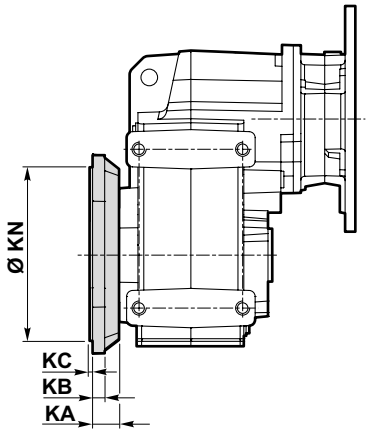

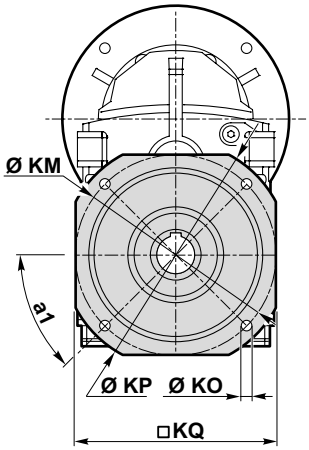

Versione **F** / ***F*** *Version*											
ITS	**KA**	**a_1**	**KB**	**KC**	**Ø KM**	**KN** f7	**KO**	**KP□**	**KQ**	**Flangia / *Flange*** Tipo / *Type*	**Peso / *Weight* [kg]**
932 933	40	45°	16	4	215	180	14	250	215	**F250**	**4.8**
	40	45°	16	4	265	230	14	300	265	**F300**	**7.1**
	40	45°	16	4	300	250	18	350	300	**F350**	**9.1**

Peso / *Weight [kg]*									
ITS	**71 B5**	**80 B5**	**90 B5**	**90 B14**	**100/112 B5**	**100/112 B14**	**132 B5**	**132 B14**	**160 B5**
932 U	-	55	55	54	57	54	60	57	68
932 P	-	54	54	53	56	54	59	56	68
933 U	58	59	59	58	61	58	-	-	-
933 P	58	58	58	57	60	58	-	-	-

Nota: peso del riduttore complessivo di olio per la posizione M1 (B3)
Note: weight of the gearbox filled with oil for M1 (B3) assembly position

Dimensioni ***Dimensions***

ITS 942 - ITS 943

ITS 942 U
ITS 943 U

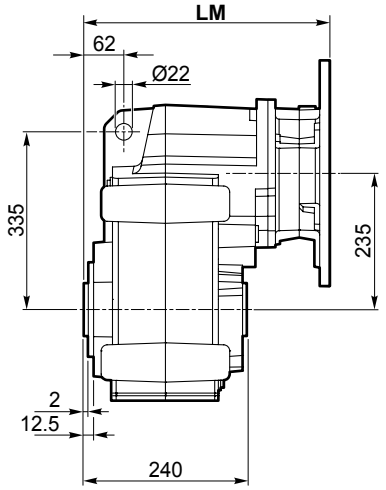

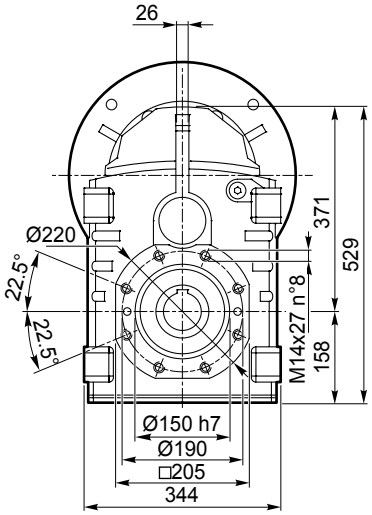

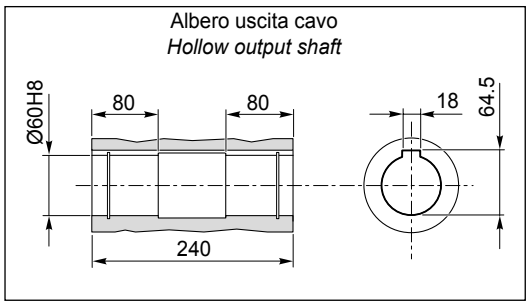

ITS 942 P
ITS 943 P

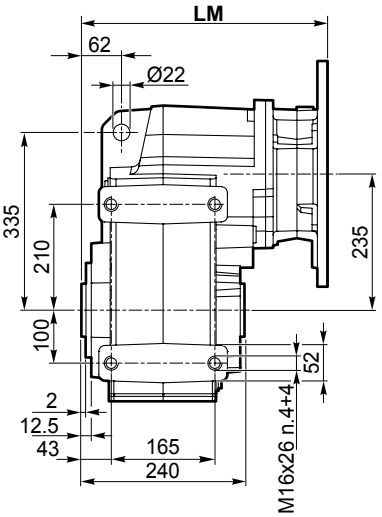

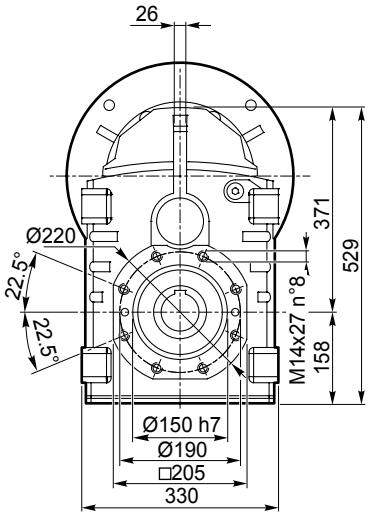

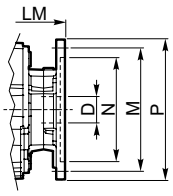

Dimensioni IEC / *IEC Dimensions*									
	80 B5	**90 B5**	**90 B14**	**100/112 B5**	**100/112 B14**	**132 B5**	**132 B14**	**160 B5**	**180 B5**
LM	325.5	325.5	330	329.5	330	350.5		400.5	400.5
N	130	130	95	180	110	230	130	250	250
M	165	165	115	215	130	265	165	300	300
P	200	200	140	250	160	300	200	350	350
D	19	24		28		38		42	48

IEC Motori applicabili
IEC Motor adapters

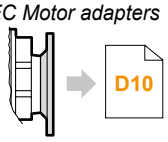

ITSIS..

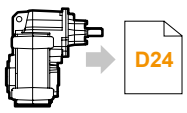

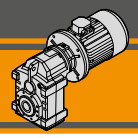

ITS 942 - ITS 943

ITS 942 U/F...
ITS 943 U/F...

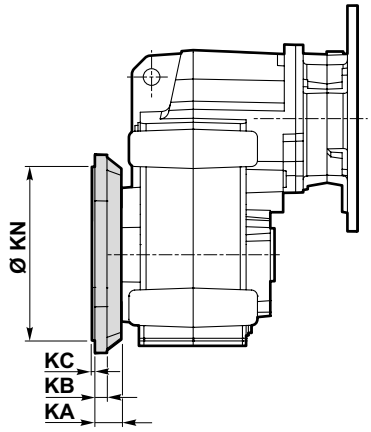

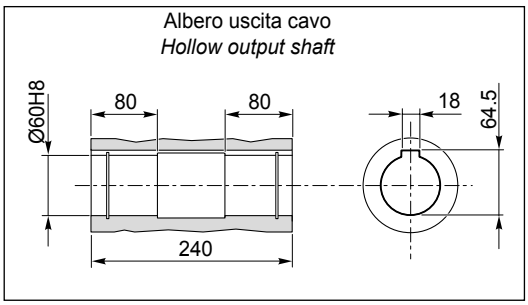

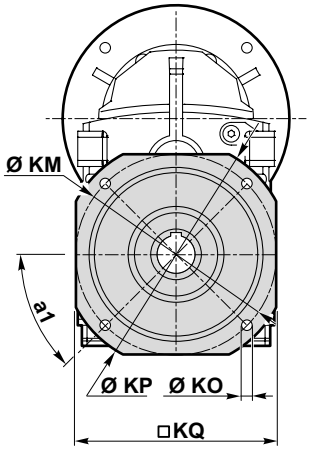

ITS 942 P/F...
ITS 943 P/F...

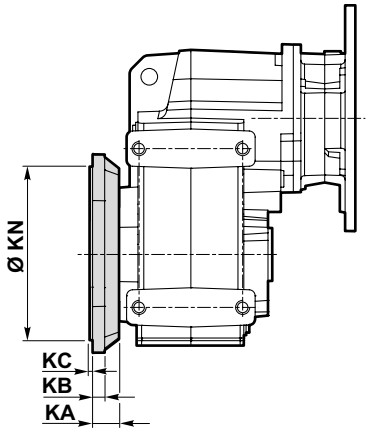

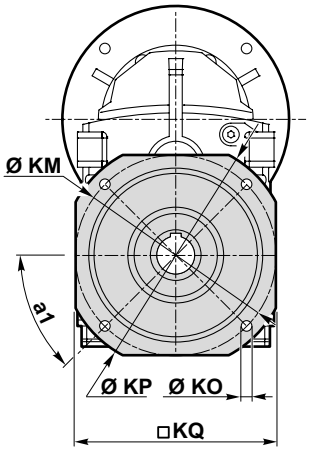

Versione **F** / ***F*** *Version*											
ITS	**KA**	**a_1**	**KB**	**KC**	**Ø KM**	**KN** f7	**KO**	**KP□**	**KQ**	**Flangia / *Flange*** Tipo / *Type*	**Peso / *Weight* [kg]**
942 943	42.5	45°	18	4	265	230	14	300	265	**F300**	**7.4**
	42.5	45°	18	5	300	250	18	350	300	**F350**	**10.2**
	42.5	45°	18	5	400	350	18	450	400	**F450**	**16.9**

Peso / *Weight [kg]*									
ITS	**80 B5**	**90 B5**	**90 B14**	**100/112 B5**	**100/112 B14**	**132 B5**	**132 B14**	**160 B5**	**180 B5**
942 U	-	93	92	95	92	98	95	109	109
942 P	-	92	91	94	91	97	94	108	108
943 U	99	99	98	101	98	104	101	-	-
943 P	98	98	97	100	97	103	100	-	-

Nota: peso del riduttore complessivo di olio per la posizione M1 (B3)
Note: weight of the gearbox filled with oil for M1 (B3) assembly position

Dimensioni *Dimensions*

ITSIS...

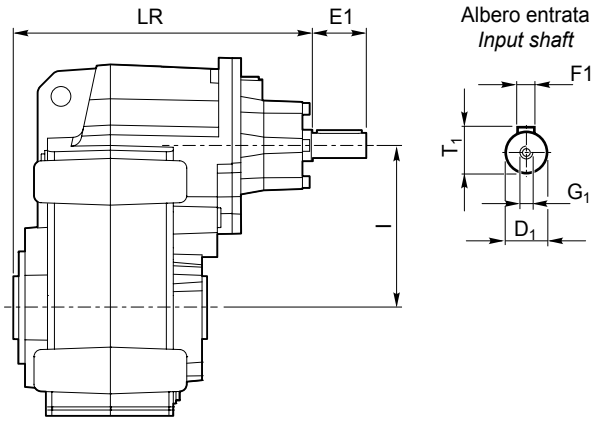

ITHIS	Versione *Version*	LR	D1	E1	I	T1	F1	G1
922	U P U/F... P/F...	315	28	60	173	31	8	M10
923		315	28	60	173	31	8	M10
932		330	28	60	180	31	8	M10
933		330	28	60	180	31	8	M10
942		375.5	38	80	235	41	10	M12
943		358	28	60	235	31	8	M10

ITHIS	Peso / *Weight* [kg]
922 U	43
922 P	43
923 U	46
923 P	45
932 U	56
932 P	55
933 U	60
933 P	59
942 U	99
942 P	98
943 U	100
943 P	99

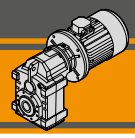

Accessori / *Accessories*

Albero lento / *Output shaft*

ITS...SZ
ITSIS..SZ

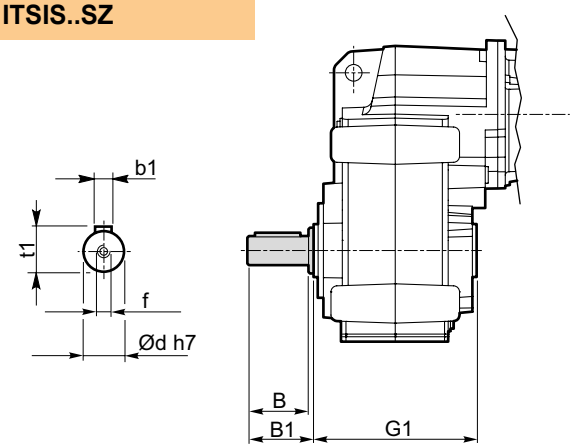

ITS	d h7	B	B1	G1	f	b1	t1	Peso / *Weight* [kg]
922 923	40	80	84	180	M16	12	43	2.2
932 933	50	100	105	210	M16	14	53.5	4.3
942 943	60	120	125	240	M20	18	64	7.1

Albero lento con calettarore / *Output shaft with shrink disk*

ITS...G...
ITSIS..G..

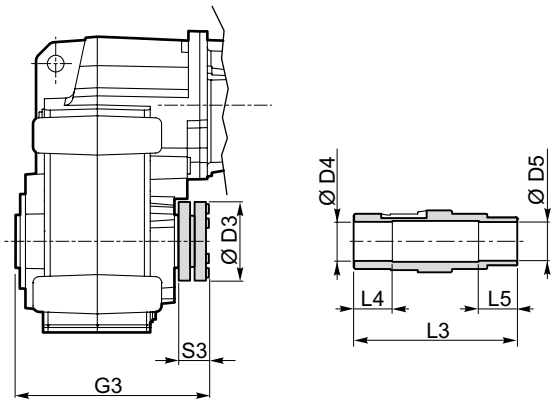

Albero lento con calettarore / *Output shaft with shrink disk*

ITS		D3	D4 H8	D5 H8	G3	L3	L4	L5	S3	G4
922/3	G40	100	41	40	217.5	215	45	45	34.5	90
	G45	100	46	45	217.5	215	45	45	34.5	90
932/3	G50	110	51	50	247.5	245	50	50	34.5	105
942/3	G60	138	61	60	280.5	279	60	60	37.5	120

Kit albero uscita con calettatore disponibile a richiesta:
per le istruzioni di montaggio riferirsi al nostro Servizio Tecnico.

Output shaft kit with shrink disk available on request:
for assembly instructions please contact our Technical Service

Accessori / *Accessories*

Dispositivo antiretro / *Backstop device*

ITS...CW
ITS...CCW

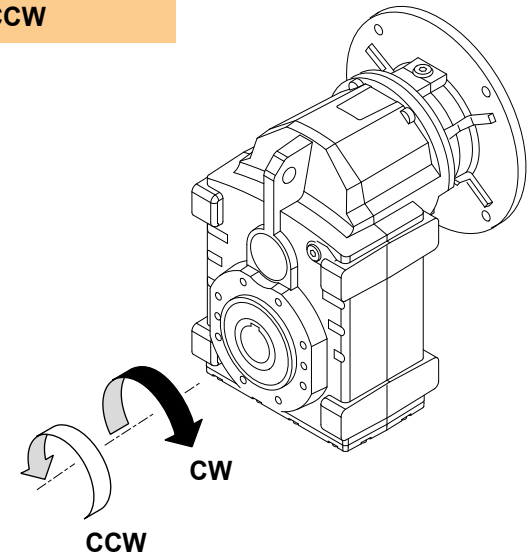

Il dispositivo antiretro permette la rotazione dell'albero in un solo senso senza creare ingombri aggiuntivi.
Prima di utilizzarlo è necessario specificare il senso di rotazione dell'albero di uscita come mostrato in figura.

The backstop device allows the output shaft to rotate in just one direction. Before using it, please specify output shaft rotation direction as shown in the figure.

Kit di montaggio albero uscita / *Output shaft assembly kit*

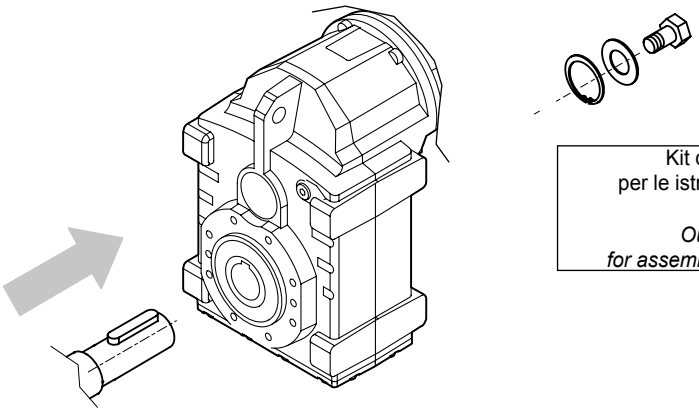

Kit di montaggio albero uscita disponibile a richiesta:
per le istruzioni di montaggio riferirsi al nostro Servizio Tecnico.

Output shaft assembly kit available upon request:
for assembly instructions please contact our Technical Assistance

Kit di smontaggio albero uscita / *Output shaft disassembly kit*

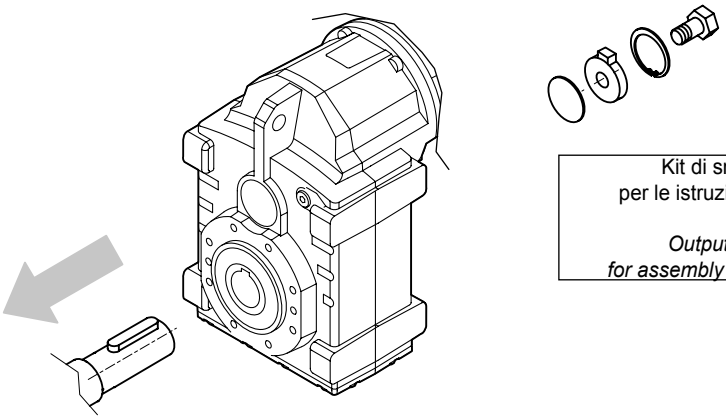

Kit di smontaggio albero uscita disponibile a richiesta:
per le istruzioni di montaggio riferirsi al nostro Servizio Tecnico.

Output shaft disassembly kit available upon request:
for assembly instructions please contact our Technical Assistance

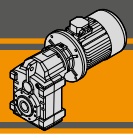

Accessori / *Accessories*

Kit braccio di reazione / *Torque arm kit*

Kit braccio di reazione disponibile a richiesta:
per le istruzioni di montaggio riferirsi al nostro Servizio Tecnico.

Torque arm kit available upon request:
for assembly instructions please contact our Technical Assistance

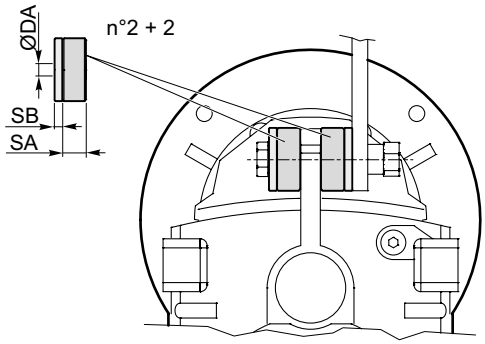

Braccio di reazione / *Torque arm*

ITS	ØDA	SA	SB
922 **923**	13	15	5
932 **933**	21	30	10
942 **943**	21	30	10